REV.	DESCRIPTION OF REVISIONS	APPR.	CHKD.	DRAW.	DATE
1	Original reversion	lucky	lucky	Roy	2023/10/25

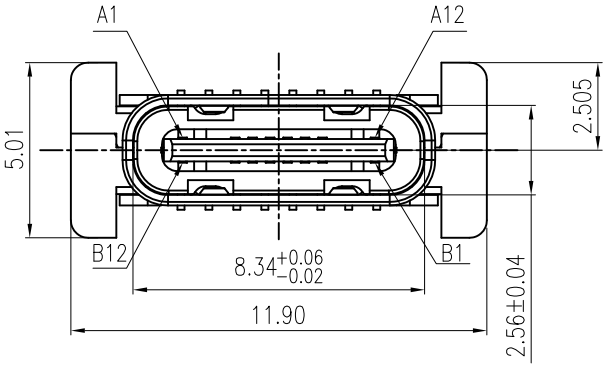

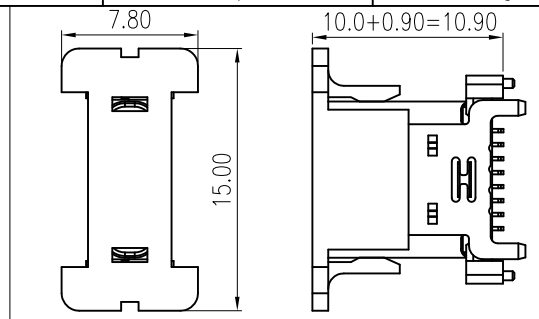

CAP ASSEMBLY AND MOUTING CONDITION (REF)
1:2

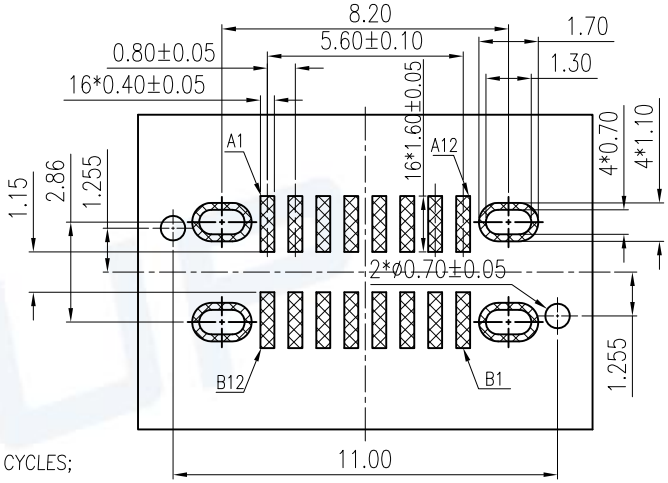

RECOMMENDED P.C.B. LAYOUT
TOLERANCE UNSPECIFIED ±0.05mm

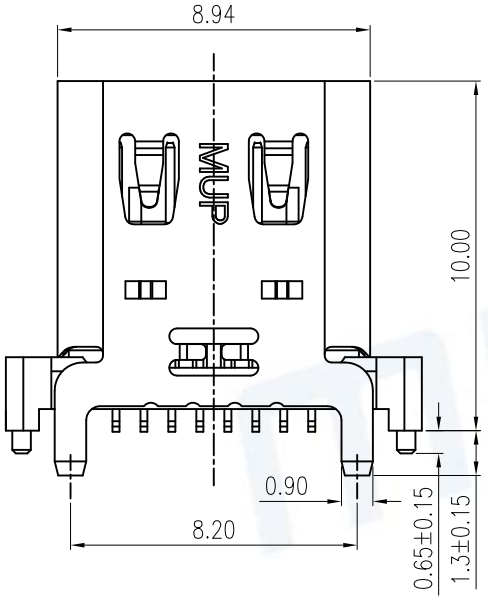

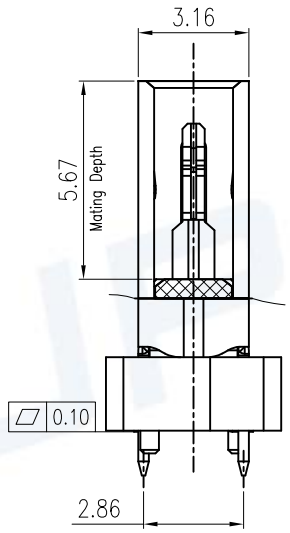

NOTE:
1. MECHANICAL:
   1-1 Insertion force: 5~20N
   1-2 Extraction force: 8~20N
   Extraction force: 10000 CYCLES 6-20N
   1-3.FREQUENCE:500±50 CYCLES/HOUR,10000 CYCLES;
2. ELECTRICAL CHARACTERISTICS:
   2-1. CURRENT RATING:
   VBUS Pins (A4,A9,B4,B9): 5A Max;
   1.25 Amps MAX. for Vconn (B5 of plug) with return path through the corresponding GND pins(Pin A1, A12, B1, B12). Other All Pins 0.25A/Pin
   2-2. INITIAL CONTACT RESISTANCE:40mΩ Max.
   2-3. INSULATION RESISTANCE:100MΩ MIN
   2-4. WITHSTANDING VOLTAGE:100V AC,1 MINUTE;
3. ENVIRONMENTAL
   TEMPERATRUE RANGE: -40°C TO +85°C.
4. Recommended thickness of steel mesh T=0.12mm.

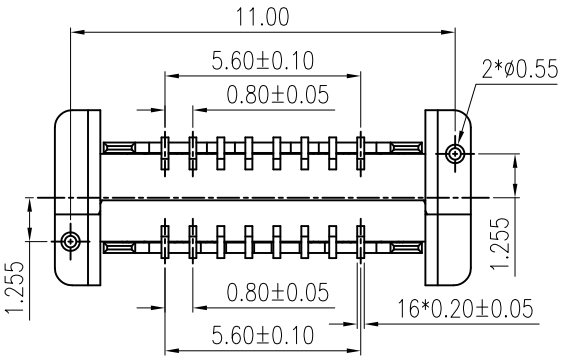

A1	GND	B12	GND
A4	VBUS	B9	VBUS
A5	CC1	B8	SBU2
A6	DP1	B7	DN2
A7	DN1	B6	DP2
A8	SBU1	B5	CC2
A9	VBUS	B4	VBUS
A12	GND	B1	GND
PIN	SIGNAL NAME	PIN	SIGNAL NAME

Pb RoHS PROCESS COMPLIANT

ITEM	PART NAME	Q'TY	MATERIAL	FINISH
1	Molding	1	THERMOPLASTIC	Black, UL94V-0
2	CONTACT	16	HIGH CONDUCTIVITY COPPER	Contact area:Au G/F
3	SHELL	1	STAINLESS STEEL	Ni plated over all
4	MID-PLATE	1	STAINLESS STEEL	RINSE
5	CAP	1	THERMOPLASTIC	Black, UL94V-0

Unless otherwise specified, other tolerance are:

X	±0.40	X°	±5°
X.X	±0.30	X.X°	±4°
X.XX	±0.20	X.XX°	±3°
X.XXX	±0.10	X.XXX°	±2°

PROJ. | UNIT mm | SCALE 1:1

CUSTOMER DRAWING

MUP® MUP INDUSTRIAL CO.,LTD.

NAME: **USB Type C Vertical Mount Receptacle**
MODEL NO: **MUP-U23008-11**
TYPE : **16Pin & 180 degree SMT 10.0H**

DRAW	Roy 2023/10/25	DWG NO.: DWG-U23008-11-01
CHECKED	lucky 2023/10/25	
APPROVAL	lucky 2023/10/25	SHEET 1/2 / REVISION 1

REV.	DESCRIPTION OF REVISIONS	APPR.	CHKD.	DRAW.	DATE
1	Original reversion	lucky	lucky	Roy	2023/10/25

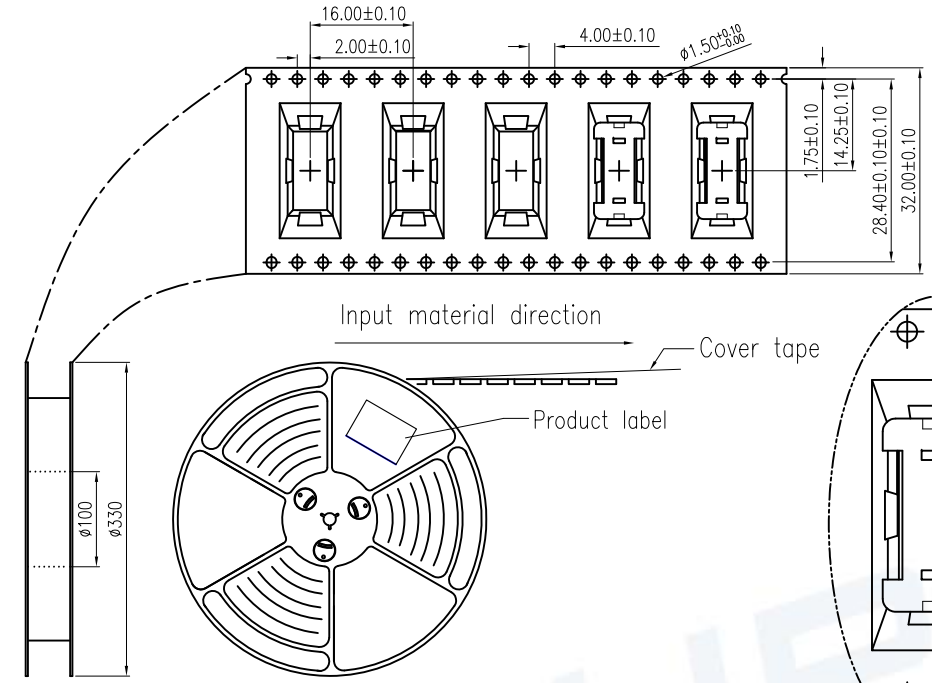

NOTES

1. NUMBER OF CONNECTORS:320PCS/REEL
2. LEAD TAPE LENGTH

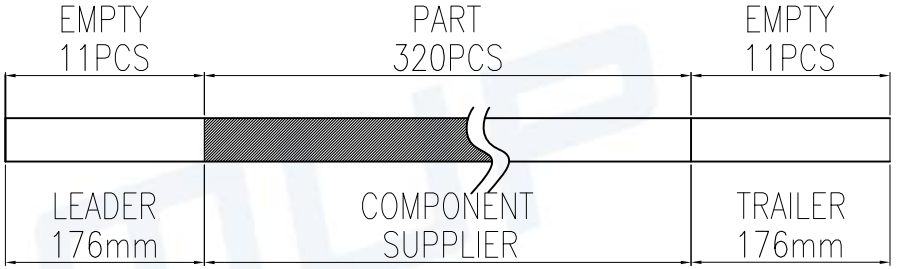

3. QUANTITY:2560/CARTON
4. WEIGHT :
   - 4.1 NET WEIGHT : 2.3 Kg
   - 4.2 GROSS WEIGHT : 6.3 Kg
5. Meas:350Lx350Wx315H mm

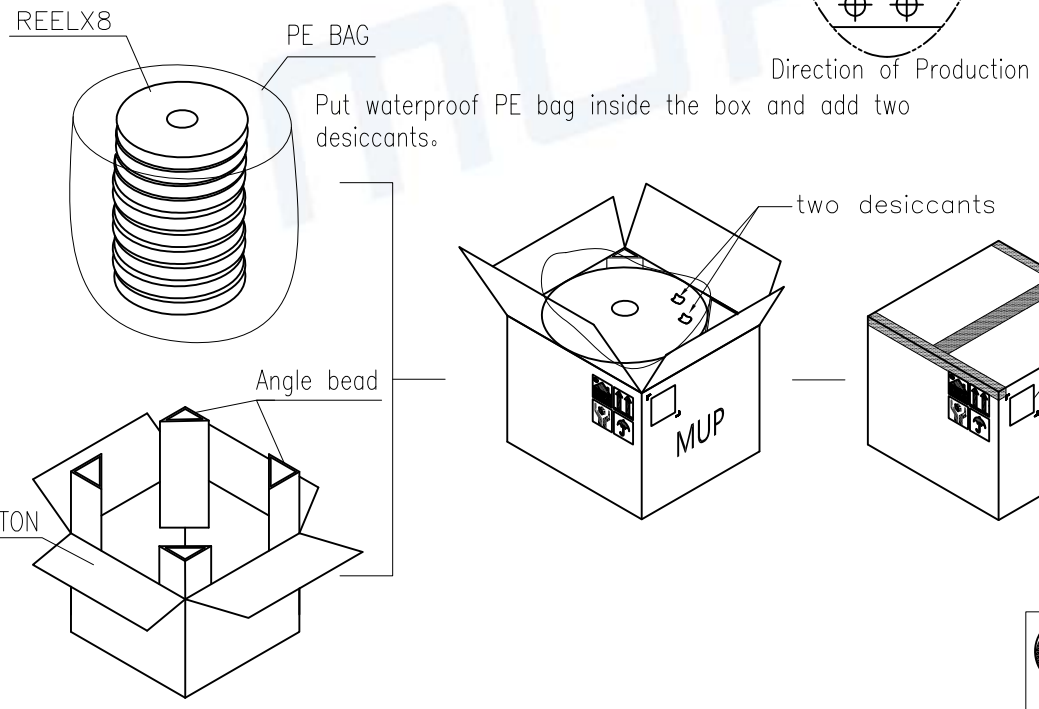

Unless otherwise specified, other tolerance are:			
X ±0.40	X° ±5°		
X.X ±0.30	X.X° ±4°		
X.XX ±0.20	X.XX° ±3°		
X.XXX ±0.10	X.XXX° ±2°		
PROJ.	UNIT mm	SCALE 1:1	
CUSTOMER DRAWING			

RoHS PROCESS COMPLIANT

MUP® MUP INDUSTRIAL CO.,LTD.

NAME:	USB Type C Vertical Mount Receptacle		
MODEL NO:	MUP-U23008-11		
TYPE :	16Pin & 180 degree SMT 10.0H		
DRAW	Roy 2023/10/25	DWG NO.:	DWG-U23008-11-01
CHECKED	lucky 2023/10/25	SHEET 2/2	REVISION 1
APPROVAL	lucky 2023/10/25		