REV.	DESCRIPTION OF REVISIONS	APPR.	CHKD.	DRAW.	DATE
1	Original reversion	lucky	lucky	Roy	2022.06.10

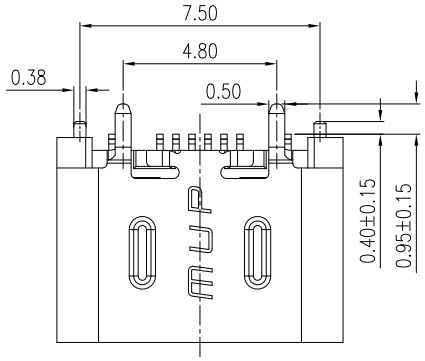

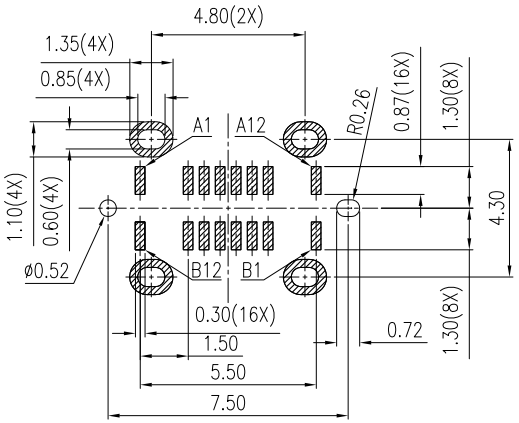

RECOMMEND P.C.B LAYOUT

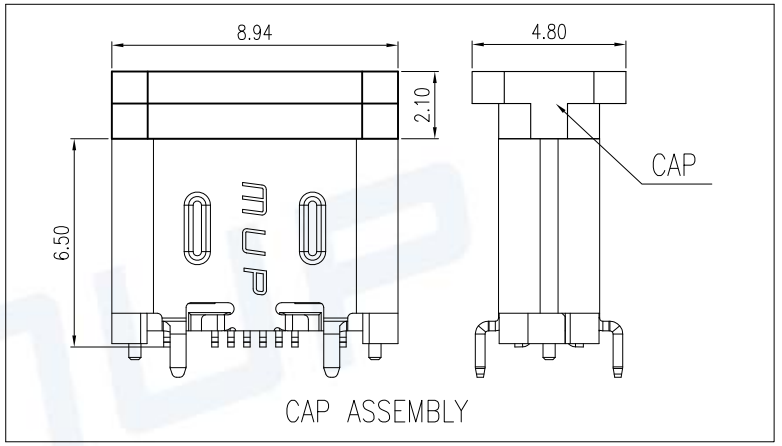

CAP ASSEMBLY

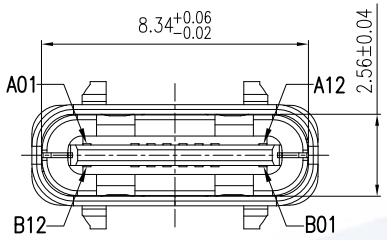

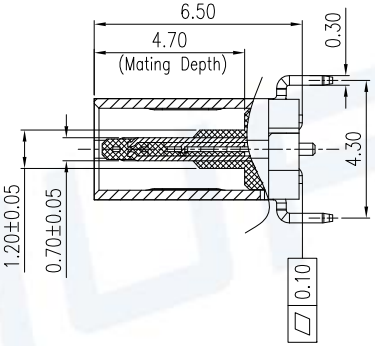

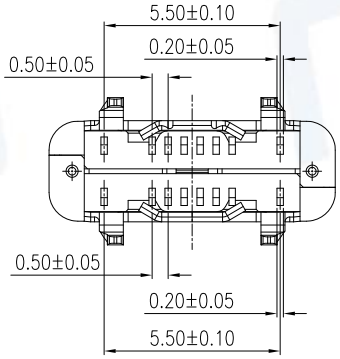

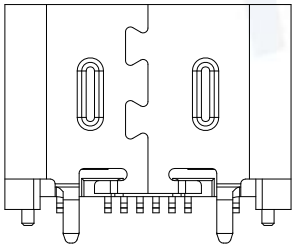

NOTE:
1. MECHANICAL:
   1-1 Insertion force: 5~20N
   1-2 Extraction force: 8~20N
   Extraction force: 10000 CYCLES 6-20N
   1-3.FREQUENCE:500±50 CYCLES/HOUR,10000 CYCLES;
2. ELECTRICAL CHARACTERISTICS:
   2-1. CURRENT RATING:
   VBUS Pins (A4,A9,B4,B9): 5.0A,
   GND Pins(A1,A12,B1,B12)&Vconn(B5) : 1.25A
   Other All Pins 0.25A
   2-2. INITIAL CONTACT RESISTANCE:40mΩ Max.
   2-3. INSULATION RESISTANCE:100MΩ MIN
   2-4. WITHSTANDING VOLTAGE:100V AC,1 MINUTE;
3. ENVIRONMENTAL
   TEMPERATRUE RANGE: -40°C TO +85°C.

PIN ASSINGMENTS

PIN	SINGAL NAME	PIN	SINGAL NAME
A1	GND	B12	GND
A4	VBUS	B9	VBUS
A5	CC1	B8	SBU2
A6	Dp1	B7	Dn2
A7	Dn1	B6	Dp2
A8	SBU1	B5	CC2
A9	VBUS	B4	VBUS
A12	GND	B1	GND

ITEM	PART NAME	Q'TY	MATERIAL	FINISH
①	INSULATOR	1	THERMOPLASTIC	Black, UL94V-0
②	TOP CONTACT	16	COPPER ALLOY	Contact area:Gold plated over Ni.
③	SHELL	1	STAINLESS STEEL	Ni plated over all
④	MID PLATE	1	STAINLESS STEEL	------
⑤	CAP	1	THERMOPLASTIC	Black, UL94V-0

Unless Otherwise specified, other tolerance are:			
X.	±0.40	X°.	±5°
X.X	±0.30	X.X°	±4°
X.XX	±0.25	X.XX°	±3°
X.XXX	±0.15	X.XXX°	±2°

APPR.	LUCKY/2022.06.10
CHKD.	LUCKY/2022.06.10
DRAW.	Roy/2022.06.10

PROCESS COMPLIANT

MUP® MUP INDUSTRIAL CO.,LTD.

NAME: **USB Type C Vertical Mount Receptacle**

MODEL No: **MUP-U23010-2**

TYPE : **6.5H 16Pin With Cap Vertical Mount**

PRAT NO. : U23010-2

DWG NO. : DWG-U23010-2-001

PROJ.	UNIT	SCALE	SHEET	REVISION
	mm	1:1	1/2	1

REV.	DESCRIPTION OF REVISIONS	APPR.	CHKD.	DRAW.	DATE
A	Original reversion	lucky	lucky	Roy	2022.06.10

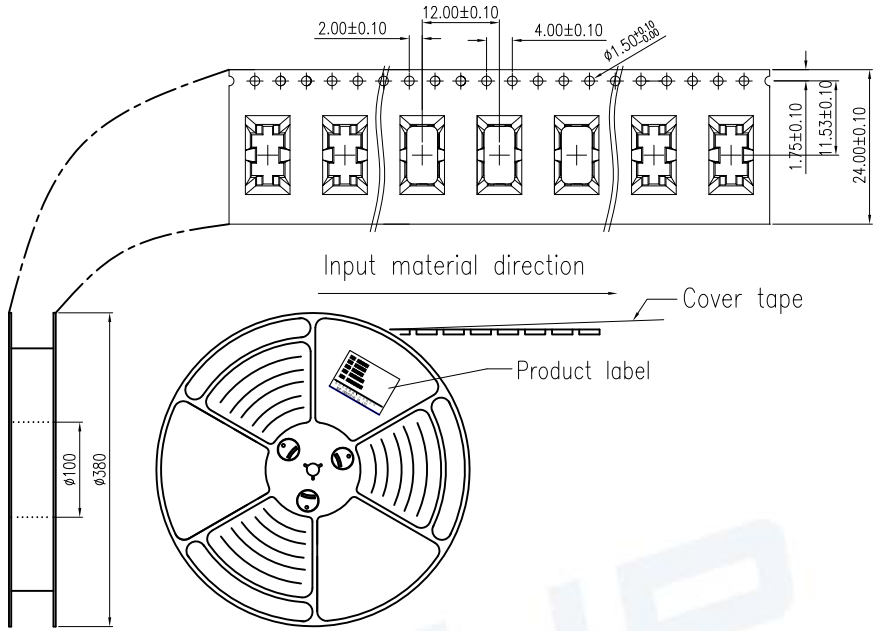

NOTES

1. NUMBER OF CONNECTORS:600PCS/REEL
2. LEAD TAPE LENGTH

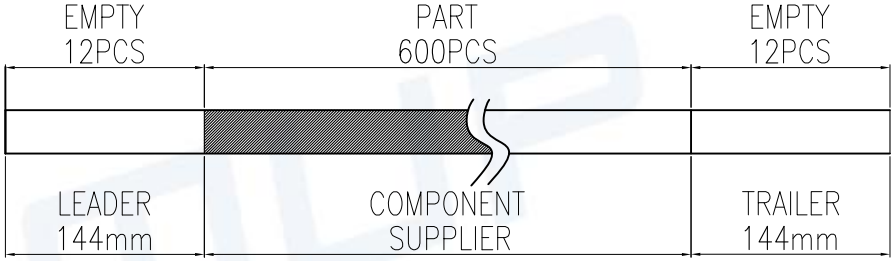

3. QUANTITY:6000/CARTON
4. WEIGHT :
   - 4.1 NET WEIGHT : 3.33 Kg
   - 4.2 GROSS WEIGHT : 8.0 Kg

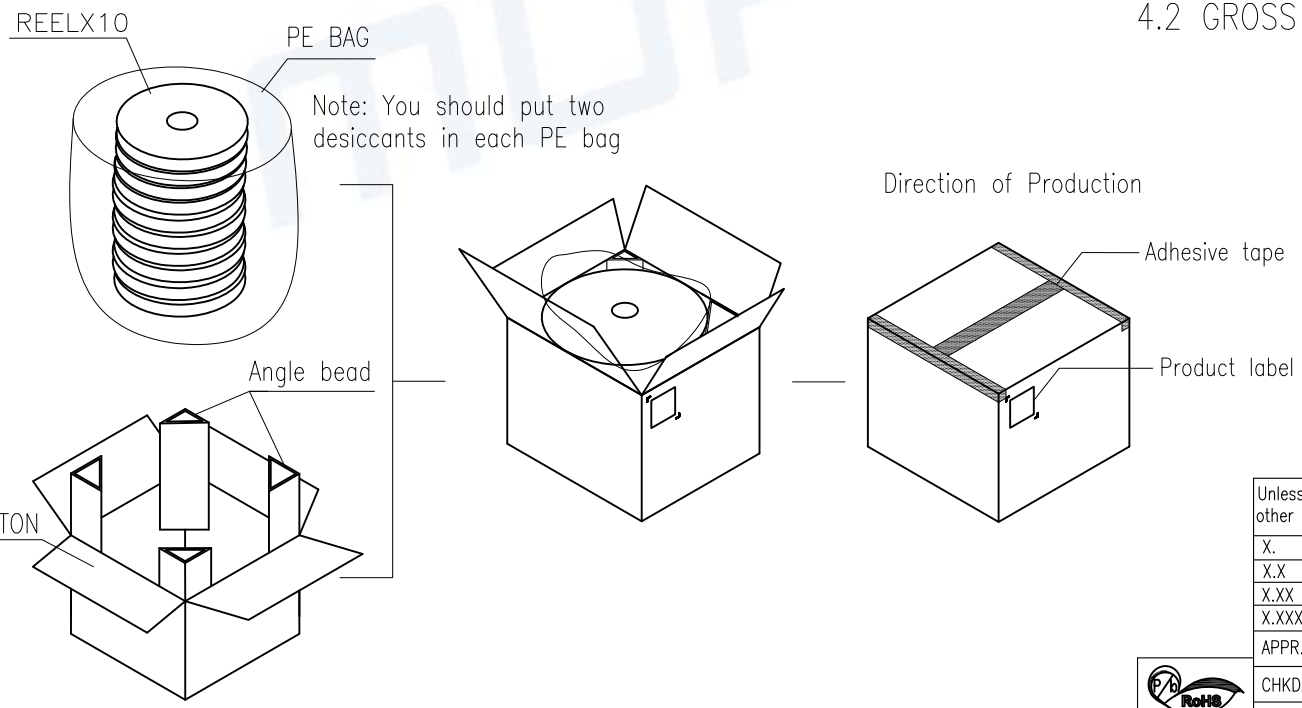

Unless Otherwise specified, other tolerance are:			
X.	±0.40	X°.	±5°
X.X	±0.30	X.X°	±4°
X.XX	±0.25	X.XX°	±3°
X.XXX	±0.15	X.XXX°	±2°

APPR.	LUCKY/2022.06.10
CHKD.	LUCKY/2022.06.10
DRAW.	Roy/2022.06.10

PROCESS COMPLIANT

MUP® MUP INDUSTRIAL CO.,LTD.

NAME: **USB Type C Vertical Mount Receptacle**

MODEL No: **MUP-U23010-2**

TYPE : **16Pin With Cap Vertical Mount**

PRAT NO. :	DWG NO. :
U23010-2	DWG-U23010-2-001

PROJ.	UNIT	SCALE	SHEET	REVISION
	mm	1:1	2/2	1