REV.	DESCRIPTION OF REVISIONS	APPR.	CHKD.	DRAW.	DATE
⚠	Original reversion	lucky	lucky	Roy	2022.05.16

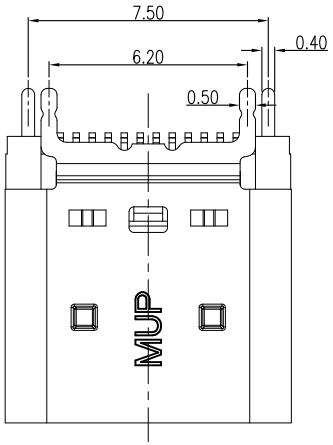

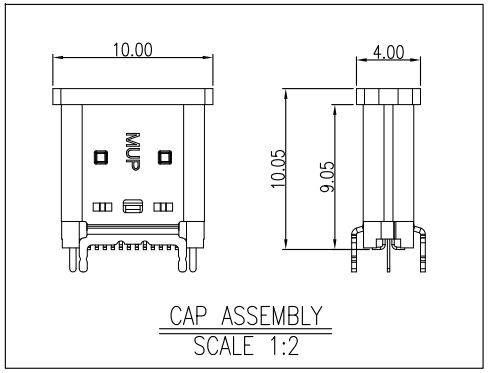

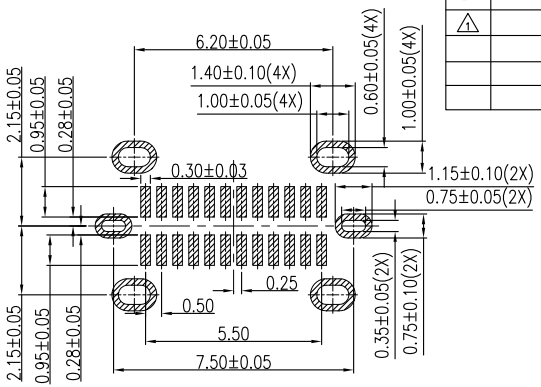

RECOMMEND P.C.B LAYOUT(COMPONENT SIDE)

TOLERANCE FOR PCB LAYOUT IS ± 0.05

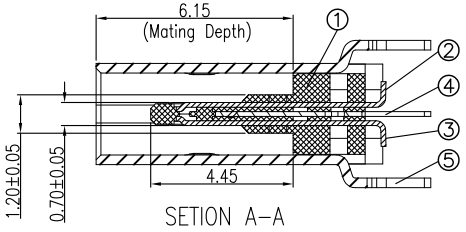

NOTE:
1. MATERRIAL&PLATING:
   MOLDING:LCP UL94 V-0
   CONTACT: HIGH CONDUCTIVITY COPPER , C7025;
   CONTACT AREA: Au 3U" Min OVER Ni 40U" Min;
   SOLDER TAILS:Au 1U" Min OVER Ni 40U" Min.
   SHELL: STAINLESS STEEL,
   30u"Ni PLATING OVER ALL.
   SHILD:SSTAINLESS STEEL,
   30u"Ni PLATING OVER ALL.
   GND PLATE:STAINLESS STEEL
2. MECHANICAL:
   2-1 Insertion force: 5-20N
   2-2 Extraction force: 1-500CYCLES 8-20N
   Extraction force: 501-1000CYCLES 6-20N
   2-3.FREQUENCE:500±50 CYCLES/HOUR,10000 CYCLES;
3. ELECTRICAL CHARACTERISTICS:
   3-1. CURRENT RATING: 1.25A/PIN FOR FOR VBUS AND GND
   0.25 A FOR OTHER PINS
   3-2. INITIAL CONTACT RESISTANCE:40mΩ Max.
   3-3. INSULATION RESISTANCE:100MΩ MIN
   3-4. WITHSTANDING VOLTAGE:100V AC,1 MINUTE;
4. ENVIRONMENTAL
   TEMPERATRUE RANGE: -40°C TO +85°C.
5. Product complant to RoHS and HF.

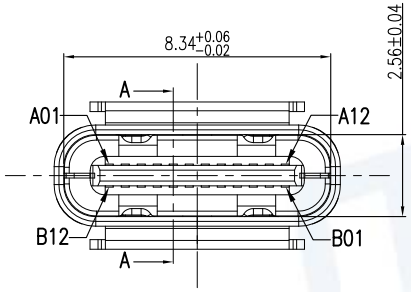

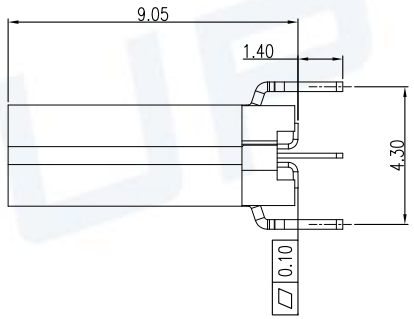

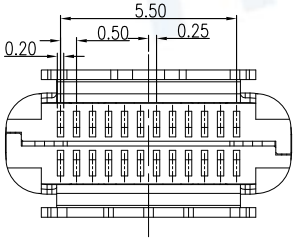

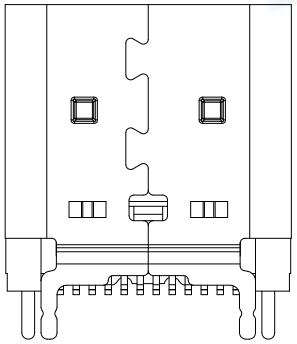

USB TYPE-C PIN ASSIGNMENTS

PIN NUMBER	SIGNAL NAME	PIN NUMBER	SIGNAL NAME
A1	GND	B12	GND
A2	SSTXp1	B11	SSRXp1
A3	SSTXn1	B10	SSRXn1
A4	VBUS	B9	VBUS
A5	CC1	B8	SBU2
A6	Dp1	B7	Dn2
A7	Dn1	B6	Dp2
A8	SBU1	B5	CC2
A9	VBUS	B4	VBUS
A10	SSRXn2	B3	SSTXn2
A11	SSRXp2	B2	SSTXp2
A12	GND	B1	GND

ITEM	PART NAME	Q'TY	MATERIAL	FINISH
①	INSULATOR	1PCS	THERMOPLASTIC	Black, UL94V-0
②	CONTACT 1	1SET	COPPER ALLOY	CONTACT AREA: Au 3U" Min OVER Ni 40U" Min; SOLDER TAILS: Au 1U" Min OVER Ni 40U" Min.
③	CONTACT 2	1SET	COPPER ALLOY	
④	MID-PLATE	1PCS	STAINLESS STEEL	Ni PLATING OVER ALL.
⑤	SHELL	1PCS	STAINLESS STEEL	Ni PLATING OVER ALL.

RoHS PROCESS COMPLIANT

Unless Otherwise specified, other tolerance are:

X. ±0.40	X°. ±5°
X.X ±0.30	X.X° ±4°
X.XX ±0.25	X.XX° ±3°
X.XXX±0.15	X.XXX°±2°

APPR.	LUCKY/2022.05.16
CHKD.	LUCKY/2022.05.16
DRAW.	Roy/2022.05.16

MUP® MUP INDUSTRIAL CO.,LTD.

NAME: **USB Type C Vertical Mount Receptacle**

MODEL No: **MUP-U23011-1**

TYPE : **24Pin & USB 3.1 Vertical Mount Height 9.05**

PRAT NO. :	DWG NO. :
U23011-1	DWG-U23011-1-001

PROJ.	UNIT	SCALE	SHEET	REVISION
	mm	1:1	1/2	1

REV.	DESCRIPTION OF REVISIONS	APPR.	CHKD.	DRAW.	DATE
A	Original reversion	lucky	lucky	Roy	2022.05.16

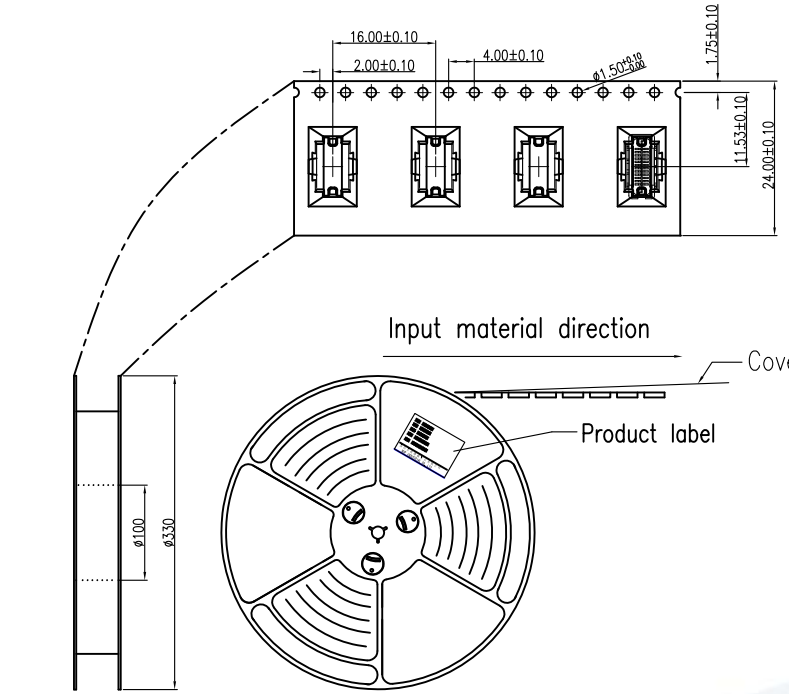

NOTES

1. NUMBER OF CONNECTORS:320PCS/REEL
2. LEAD TAPE LENGTH

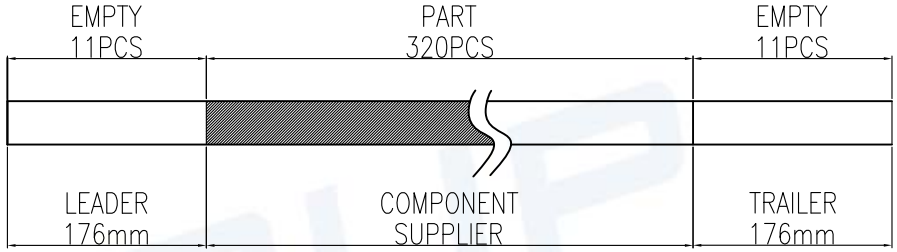

3. QUANTITY:3200/CARTON

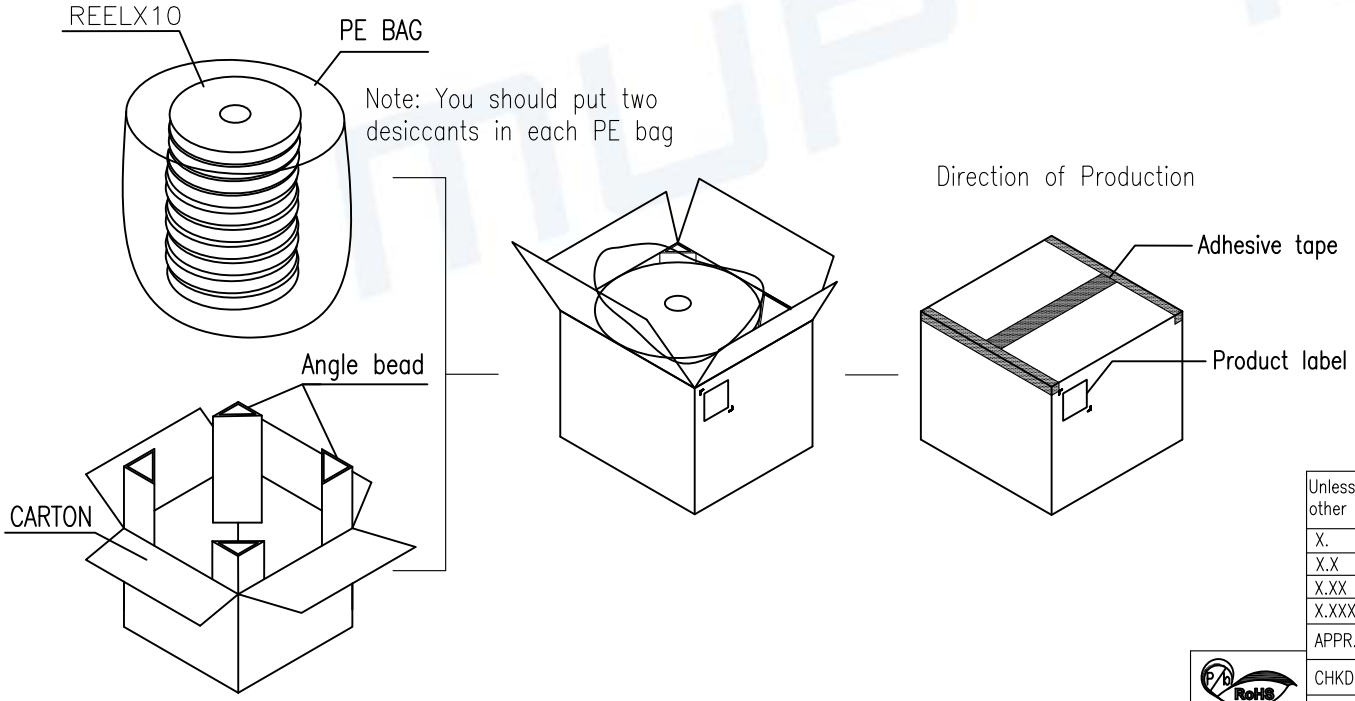

Unless Otherwise specified, other tolerance are:			
X.	±0.40	X°.	±5°
X.X	±0.30	X.X°	±4°
X.XX	±0.25	X.XX°	±3°
X.XXX	±0.15	X.XXX°	±2°

APPR.	LUCKY/2022.05.16
CHKD.	LUCKY/2022.05.16
DRAW.	Roy/2022.05.16

RoHS PROCESS COMPLIANT

MUP® MUP INDUSTRIAL CO.,LTD.

NAME: **USB Type C Vertical Mount Receptacle**

MODEL No: **MUP-U23011-1**

TYPE : **24Pin & USB 3.1 Vertical Mount Height 9.05**

PRAT NO. :	DWG NO. :	UNIT	SCALE	SHEET	REVISION
U23011-1	DWG-U23011-1-001	mm	1:1	2/2	1