REV.	DESCRIPTION OF REVISIONS	APPR.	CHKD.	DRAW.	DATE
1	Ooriginal reversion	Roy	lucky	lucky	2018.04.25
2	Modify product model	lucky	lucky	Roy	2020.03.20

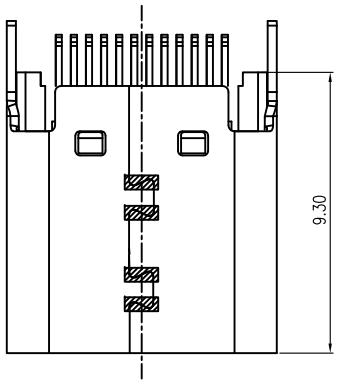

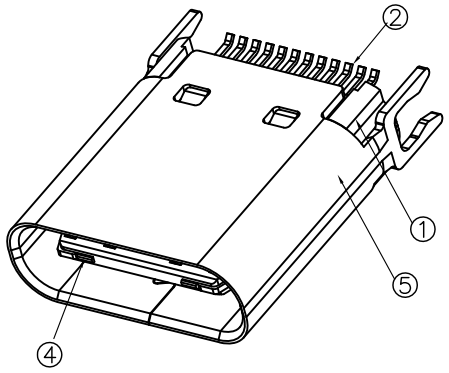

3D VIEW

NOTE:
1. MECHANICAL:
   1-1.MATING FORCE: 0.5~2.0Kgf
   1-2.UMMATING FORCE: Initial: 0.8~2.0Kgf
   After 500 to 10,000cycles: 0.6~2.0Kgf
   1-3.FREQUENCE:200±50 CYCLES/HOUR,10000 CYCLES;
2. ELECTRICAL CHARACTERISTICS:
   2-1. CURRENT RATING: 5.0A Max.
   2-2. INITIAL CONTACT RESISTANCE:40mΩ Max.
   2-3. INSULATION RESISTANCE:100MΩ MIN AT 500V DC
   2-4. WITHSTANDING VOLTAGE:100V AC,1 MINUTE;
5. ENVIRONMENTAL
   TEMPERATRUE RANGE: -25°C TO +85°C.

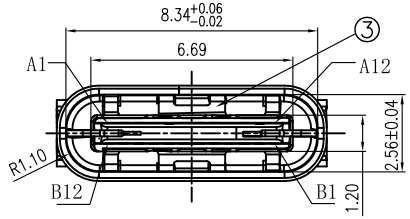

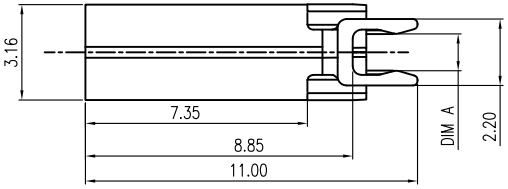

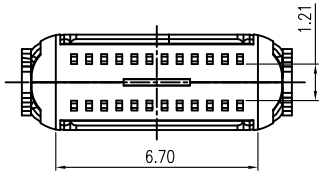

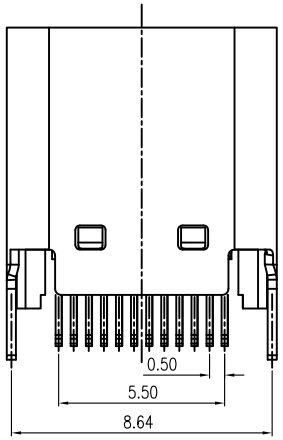

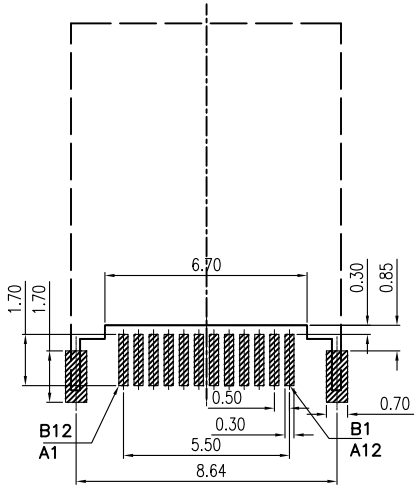

RECOMMENDED P.C.B. LAYOUT (T=1.20mm)

TOLERANCE UNSPECIFIED ±0.05mm

Model No.	DIM A
U23201-1A	0.80
U23201-2A	1.00
U23201-3A	1.20

A1	GND	B12	GND
A2	SSTXP1	B11	SSRXP1
A3	SSTXN1	B10	SSRXN1
A4	VBUS	B9	VBUS
A5	CC1	B8	SBU2
A6	DP1	B7	DN2
A7	DN1	B6	DP2
A8	SBU1	B5	CC2
A9	VBUS	B4	VBUS
A10	SSRXN2	B3	SSTXN2
A11	SSRXP2	B2	SSTXP2
A12	GND	B1	GND
PIN	SIGNAL NAME	PIN	SIGNAL NAME

NO.	DESCRIPTION	MATERIAL	REMARKS	QTY
5	SHELL	STAINLESS STEEL	NI Plated	1PCS
4	SPRING	STAINLESS STEEL	---	2PCS
3	SHIELDING PLATE	STAINLESS STEEL	---	1PCS
2	CONTACT	COPPER ALLOY	Au/NI Plated	1SET
1	HOUSING	HIGH TEMPERATURE PLASTIC	BLACK	1PCS

Unless Otherwise specified, other tolerance are:

X.	±0.40	X°.	±5°
X.X	±0.30	X.X°	±4°
X.XX	±0.25	X.XX°	±3°
X.XXX	±0.15	X.XXX°	±2°

APPR.	LUCKY/2018.04.25
CHKD.	LUCKY/2018.04.25
DRAW.	Roy/2018.04.25

PROCESS COMPLIANT

MUP® MUP INDUSTRIAL CO.,LTD.

NAME: **USB Type C Clamp Receptacle**

MODEL No: **MUP-U23201-XA**

TYPE : **24P Clamp H=9.30**

PRAT NO. :	DWG NO. :
U23201-XA	DWG-U23201-XA-001

PROJ.	UNIT	SCALE	SHEET	REVISION
	mm	1:1	1/1	2