REV.	DESCRIPTION OF REVISIONS	APPR.	CHKD.	DRAW.	DATE
1	Original reversion	lucky	lucky	Roy	2021.12.06

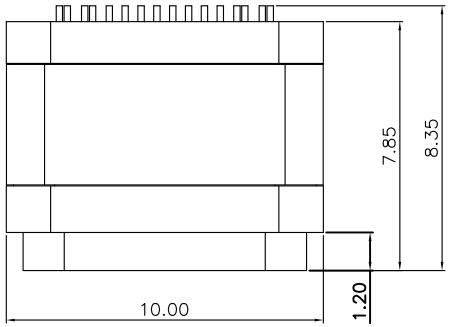

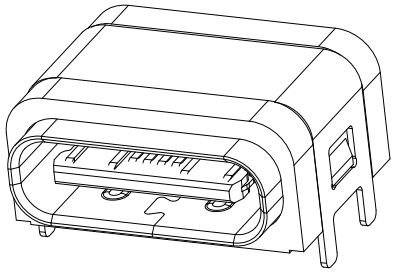

3D VIEW

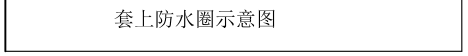

套上防水圈示意图

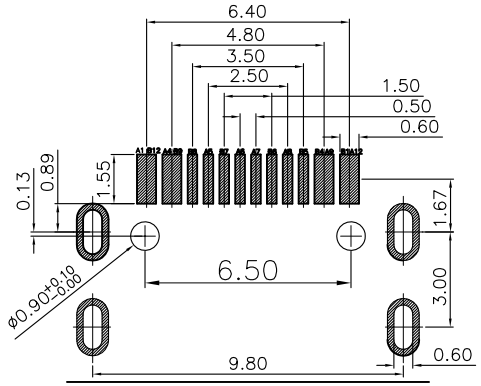

RECOMMENDED P.C.B. LAYOUT
TOLERANCE UNSPECIFIED ±0.05mm

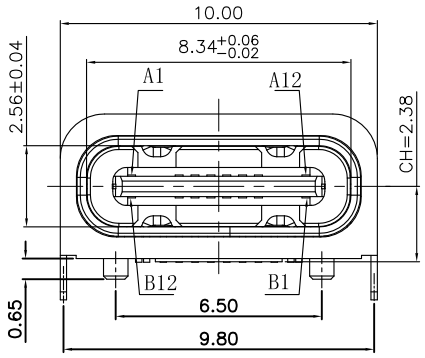

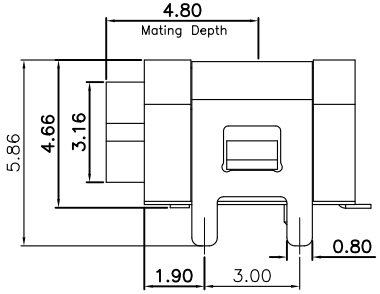

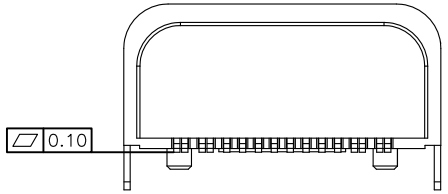



PIN ASSINGMENTS

PIN	SINGAL NAME
A1	GND
A4	VBUS
A5	CC1
A6	Dp1
A7	Dn1
A8	SBU1
A9	VBUS
A12	GND

PIN	SINGAL NAME
B12	GND
B9	VBUS
B8	SBU2
B7	Dn2
B6	Dp2
B5	CC2
B4	VBUS
B1	GND

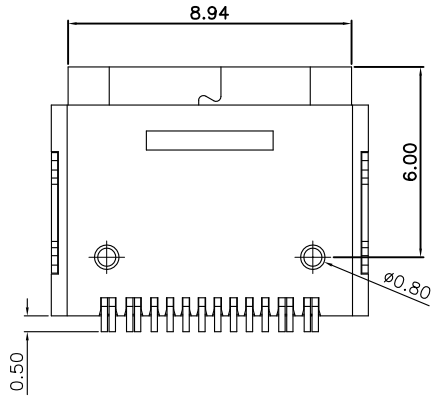

NOTE:
1. MECHANICAL:
   1-1 Insertion force: 5~20N
   1-2 Extraction force: 8~20N
   Extraction force: 10000 CYCLES 6-20N
   1-3.FREQUENCE:500±50 CYCLES/HOUR,10000 CYCLES;
2. ELECTRICAL CHARACTERISTICS:
   2-1. CURRENT RATING:
   VBUS Pins (A4,A9,B4,B9): 5.0A,
   Vconn(B5) : 1.25A
   Other All Pins 0.25A
   2-2. INITIAL CONTACT RESISTANCE:40mΩ Max.
   2-3. INSULATION RESISTANCE:100MΩ MIN
   2-4. WITHSTANDING VOLTAGE:100V AC,1 MINUTE;
3. ENVIRONMENTAL
   TEMPERATRUE RANGE: -25°C TO +85°C.
4. WATER PROOFNESS:THISPRODUCTIS BASED ON IPX7.

NO.	DESCRIPTION	MATERIAL	REMARKS	QTY
6	O_ring	Silicone Rubber	BLACK	1PCS
5	SHELL	STAINLESS STEEL	NI Plated	1PCS
4	MID-PLATE	STAINLESS STEEL	Cleaning	1PCS
3	CONTACT	COPPER ALLOY	Au/NI Plated	1SET
2	SHELL HOUSING	HIGH TEMPERATURE PLASTIC	BLACK	1PCS
1	HOUSING	HIGH TEMPERATURE PLASTIC	BLACK	1PCS

Unless Otherwise specified, other tolerance are:

X.	±0.40	X°.	±5°
X.X	±0.30	X.X°	±4°
X.XX	±0.25	X.XX°	±3°
X.XXX	±0.15	X.XXX°	±2°

MUP® MUP INDUSTRIAL CO.,LTD.

NAME: **USB Type C Single-Row SMT on Board Receptacle**

MODEL No: **MUP-U20409-2**

TYPE : **16P & Single-Row SMT on board & Waterproof**

APPR.	LUCKY/2021.12.06	PRAT NO. : U20409-2	DWG NO. : DWG-U20409-2-001		
CHKD.	LUCKY/2021.12.06	PROJ.	UNIT mm	SCALE 1:1	SHEET 1/2	REVISION 1
DRAW.	Roy/2021.12.06				

Pb RoHS PROCESS COMPLIANT

REV.	DESCRIPTION OF REVISIONS	APPR.	CHKD.	DRAW.	DATE
A	Original reversion	lucky	lucky	Roy	2021.12.06

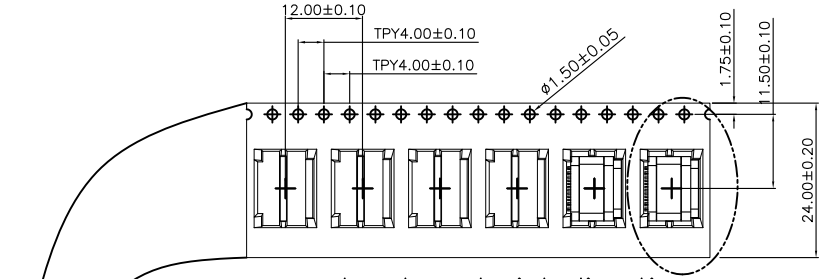

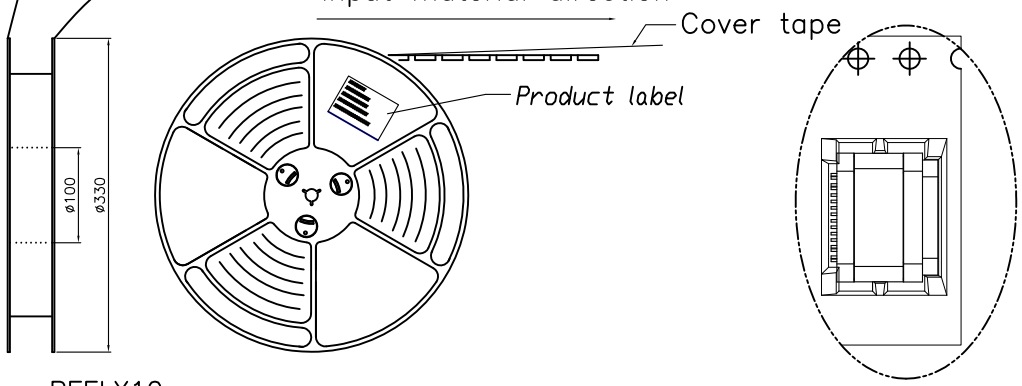

NOTES

1. NUMBER OF CONNECTORS:900PCS/REEL
2. LEAD TAPE LENGTH

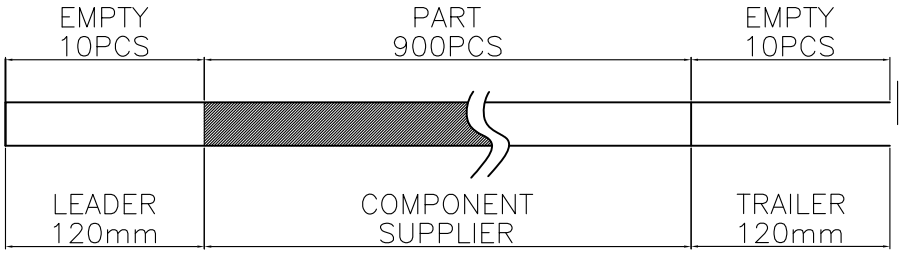

3. QUANTITY:9000/CARTON

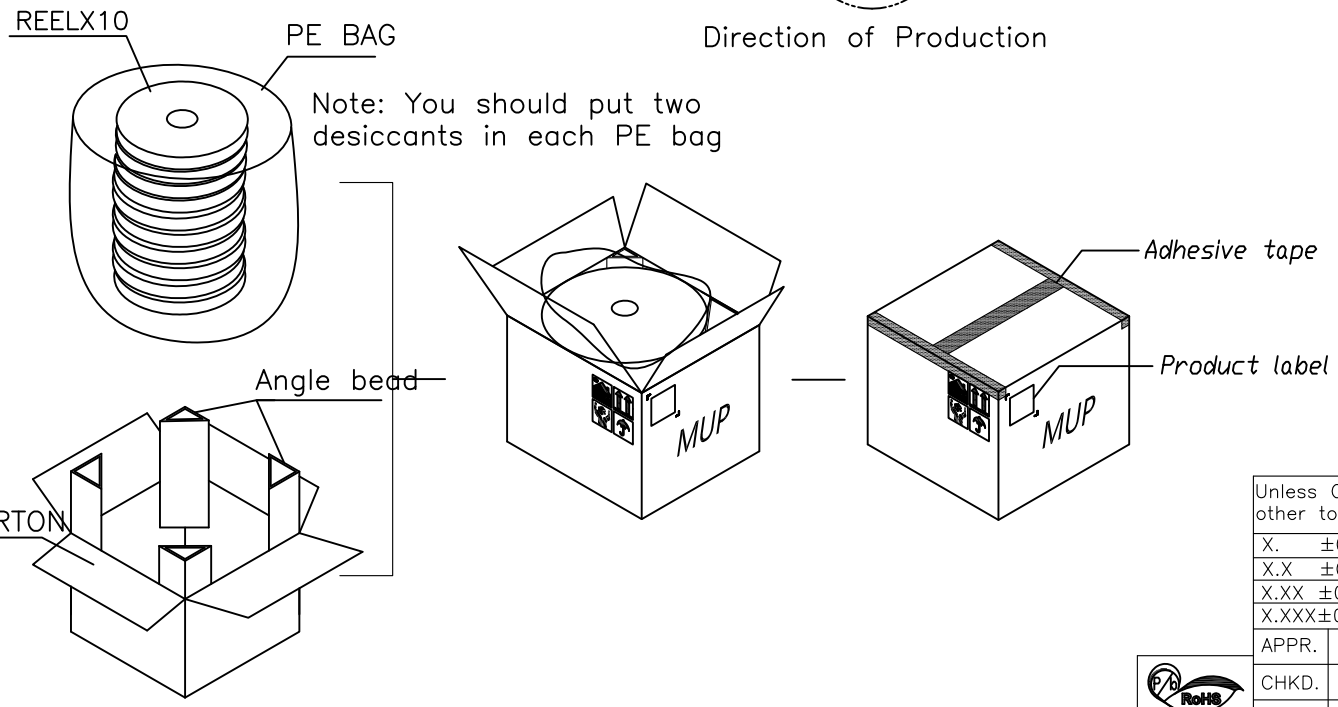

Unless Otherwise specified, other tolerance are:			
X.	±0.40	X°.	±5°
X.X	±0.30	X.X°	±4°
X.XX	±0.25	X.XX°	±3°
X.XXX	±0.15	X.XXX°	±2°

APPR.	LUCKY/2021.12.06
CHKD.	LUCKY/2021.12.06
DRAW.	Roy/2021.12.06

RoHS PROCESS COMPLIANT

MUP® MUP INDUSTRIAL CO.,LTD.

NAME: **USB Type C Single-Row SMT on Board Receptacle**

MODEL No: **MUP-U20409-2**

TYPE : **16P & Single-Row SMT on board & Waterproof**

PRAT NO. :	DWG NO. :
U20409-2	DWG-U20409-2-001

PROJ.	UNIT	SCALE	SHEET	REVISION
	mm	1:1	2/2	2