REV.	DESCRIPTION OF REVISIONS	APPR.	CHKD.	DRAW.	DATE
1	NEW				2024/06/02

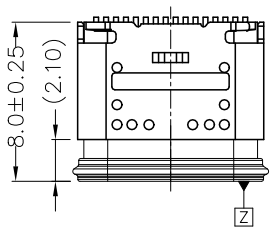

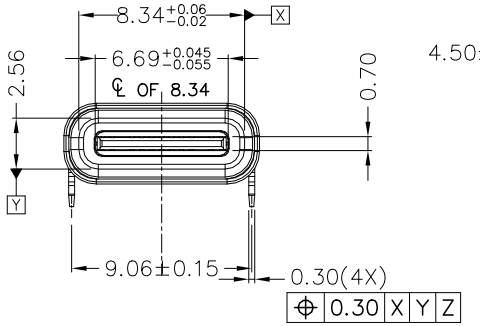

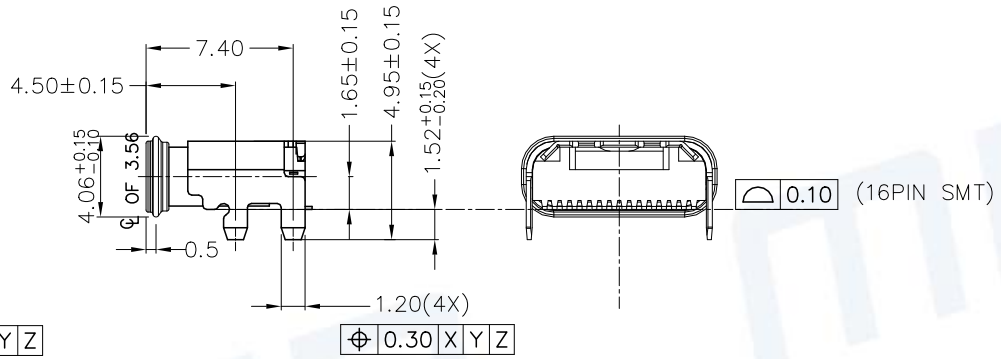

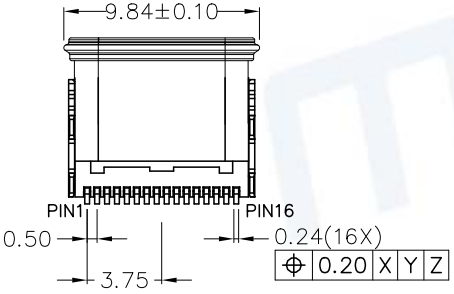

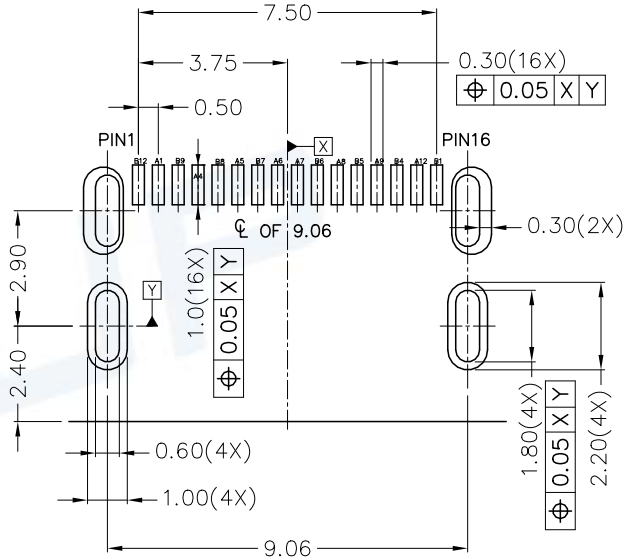

RECOMMENDED PCB LAYOUT(TOP VIEW)

PCB THICKNESS 1.72±0.05MM

Notes:
1. ELECTICAL characteristics:
1-1. Dieletric withstance:500V AC/1minute.
1-2. Current rating:
Vbus and GND contact:≥1.25A/pin, Paralleled for a total of 5A Min
Other contacts:≥0.25A/pin
1-3. Initial LLCR 40mΩ max, after test Δ10mΩ max:
40mΩ MAX. FOR VBUS, GND AND OTHE CONTACTS,
50mΩ MAX. FINAL AFTER TEST.
1-4. Insulation Resistance:1000MΩ Min
2: Mechanical characteristics
2-1 Insert force:5~20N MAX.
Withdraw force:8~20N, after test:6~20N
2-2 Durability:10000 cycles min
2-3 Laser point:Height<0.05mm, Pulling force>50N
3: Envirmention characteristics
3-1 Opreating temperature:-40~+85℃
3-2 Salty spray:48hours(EIA-364-26B-B)
4. Burr:0.05MM MAX.
5. Tape and reel packing satisfy EIA-364-481 standard

ITEM	PART NAME	Q'TY	MATERIAL	FINISH
8	GLUE WATER	1	Silicone	HJ8236
7	CONTACT	16	COPPER ALLOY	Contact area: Au plated over Nickel
6	I/M	1	THERMOPLASTIC	Black
5	MID-PLATE	1	STAINLESS STEE	Clean
4	EMI	1	STAINLESS STEE	Clean
3	INNER SHELL	1	STAINLESS STEE	Clean
2	O_ring	1	Silicone Rubber	Black, NJSILTMNJ-1005-50A/B
1	OUTER SHELL	1	STAINLESS STEE	Ni:50U"

Pin		Signal	Description	Mating Sequence	Description	Signal	Pin	
2	A1	GND	Ground return	First	Ground return	GND	B12	1
/	A2	TX1+	/	Second	/	RX1+	B11	/
/	A3	TX1-	/	Second	/	RX1-	B10	/
4	A4	VBUS	Bus Power	First	Bus Power	VBUS	B9	3
6	A5	CC1	Configuration Channel	Second	Sideband Use(SBU)	SBU2	B8	5
8	A6	D+	Positive half of the USB 2.0 differential pair-Position 1	Second	Negative half of the USB 2.0 differential pair-Position 2	D-	B7	7
9	A7	D-	Negative half of the USB 2.0 differential pair-Position 1	Second	Positive half of the USB 2.0 differential pair-Position 2	D+	B6	10
11	A8	SBU1	Sideband Use(SBU)	Second	Configuration Channel	CC2	B5	12
13	A9	VBUS	Bus Power	First	Bus Power	VBUS	B4	14
/	A10	RX2-	/	Second	/	TX2-	B3	/
/	A11	RX2+	/	Second	/	TX2+	B2	/
15	A12	GND	Ground return	First	Ground return	GND	B1	16

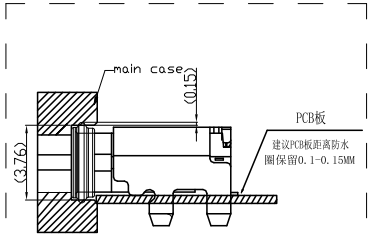

PROCESS COMPLIANT

Unless otherwise specified, other tolerance are:

X	±0.40	X°	±5°
X.X	±0.30	X.X°	±4°
X.XX	±0.20	X.XX°	±3°
X.XXX	±0.10	X.XXX°	±2°

PROJ. | UNIT mm | SCALE 1:1

CUSTOMER DRAWING

MUP® MUP INDUSTRIAL CO.,LTD.

NAME: **USB Type C Receptacle**

MODEL NO: **MUP-U20418-01**

TYPE: **母座16P板上一体防水LIM款 CH1.65**

DRAW	Xfang 2024/06/02	DWG NO.: DWG-U20418-01-01
CHECKED	Huabo 2024/06/02	
APPROVAL	Simon 2024/06/02	SHEET 1/2 / REVISION 2

REV.	DESCRIPTION OF REVISIONS	APPR.	CHKD.	DRAW.	DATE
1	NEW				2024/06/02

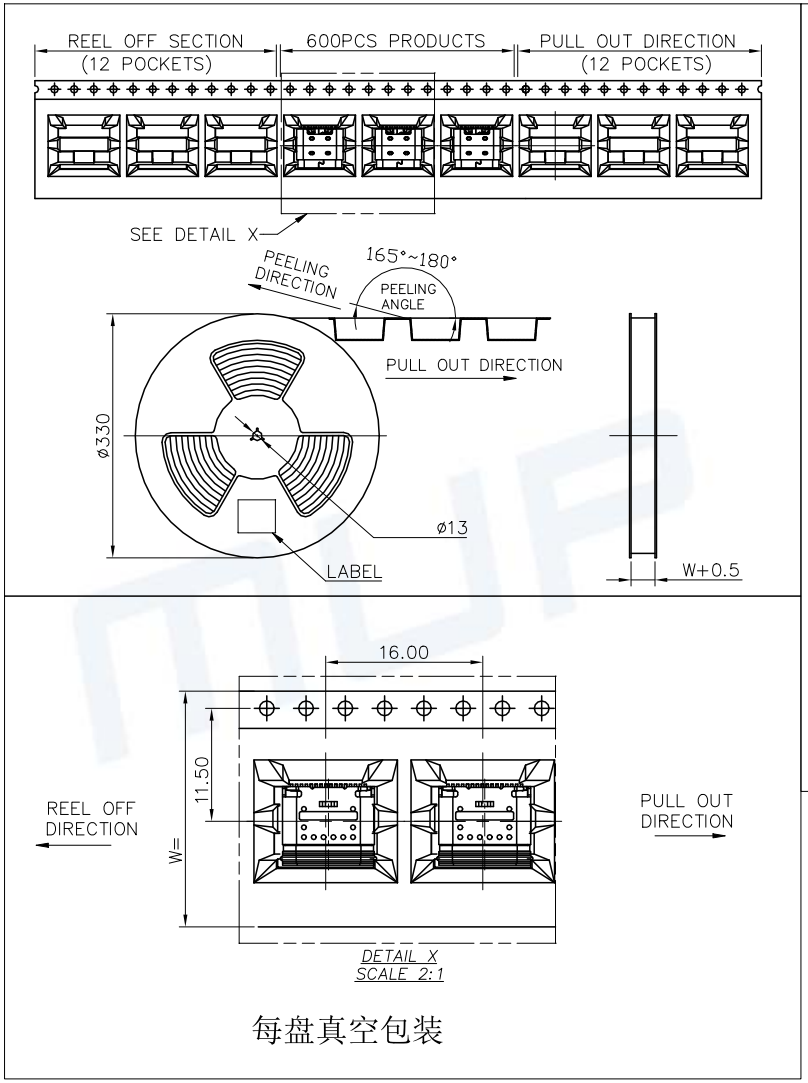

每盘真空包装

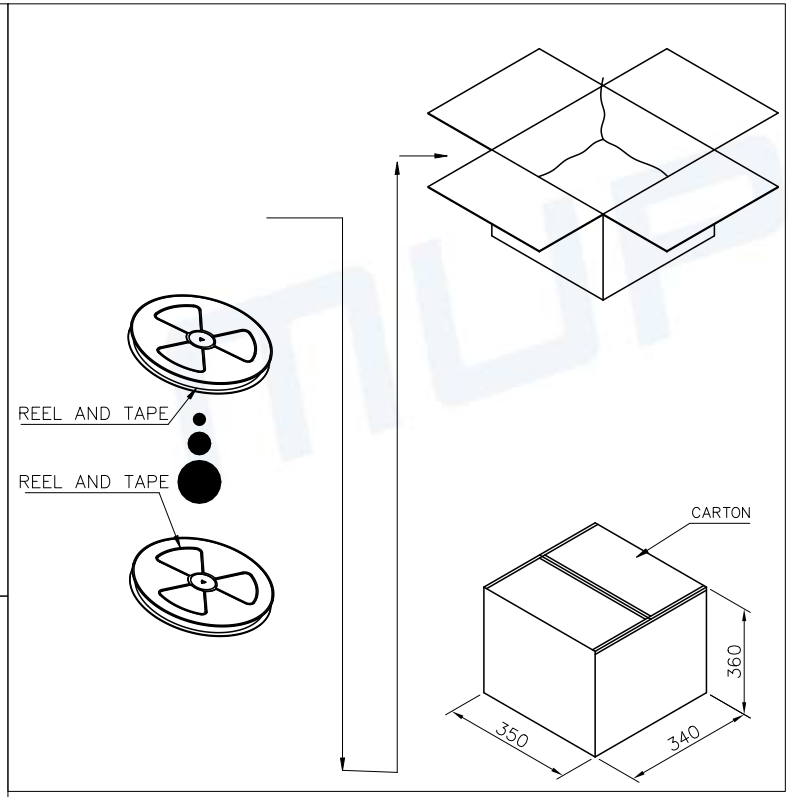

	REEL	CARTON
CONNECTOR (PCS)	800	8800

Unless otherwise specified, other tolerance are:

X	±0.40	X°	±5°
X.X	±0.30	X.X°	±4°
X.XX	±0.20	X.XX°	±3°
X.XXX	±0.10	X.XXX°	±2°

PROJ. | UNIT mm | SCALE 1:1

CUSTOMER DRAWING

RoHS PROCESS COMPLIANT

MUP® MUP INDUSTRIAL CO.,LTD.

NAME: **USB Type C Receptacle**

MODEL NO: **MUP-U20418-01**

TYPE : 母座**16P**板上一体防水**LIM**款 **CH1.65**

DRAW	Xfang 2024/06/02	DWG NO.: DWG-U20418-01-01
CHECKED	Huabo 2024/06/02	
APPROVAL	Simon 2024/06/02	SHEET 2/2 / REVISION 1