REV.	DESCRIPTION OF REVISIONS	APPR.	CHKD.	DRAW.	DATE
⚠	Original reversion	lucky	lucky	Roy	2023.05.25

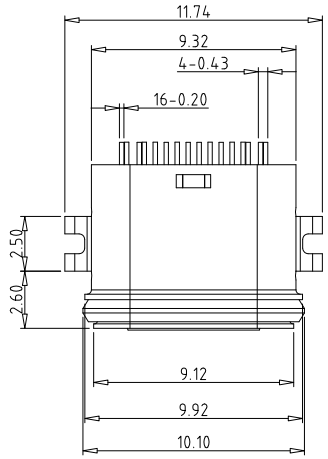

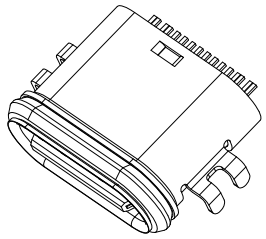

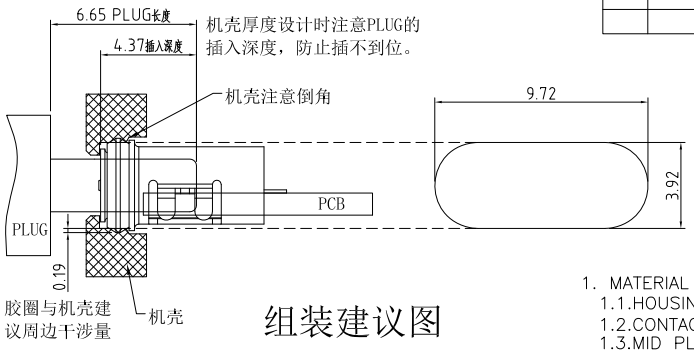

组装建议图

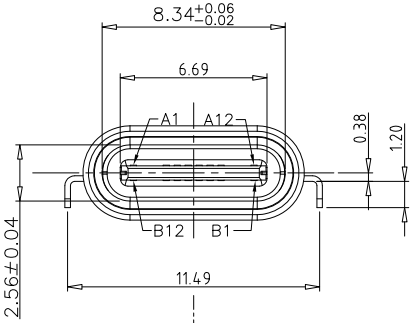

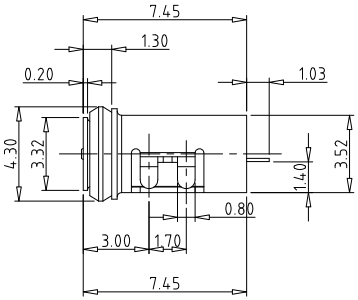

结构设计注意：
1. 成品使用时，如有洗面奶泡沫、牙膏、洗手液、脏污液体，请在TYPE-C口外面再设计一层外壳，保护TYPE-C表面金手指不会被脏污覆盖。

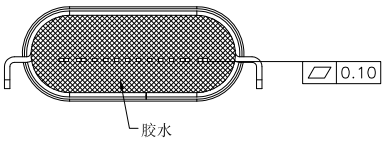

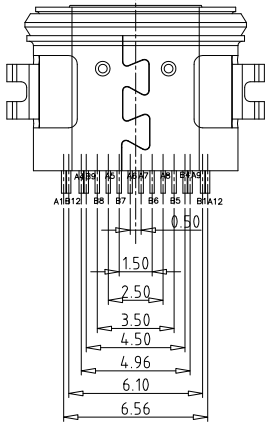

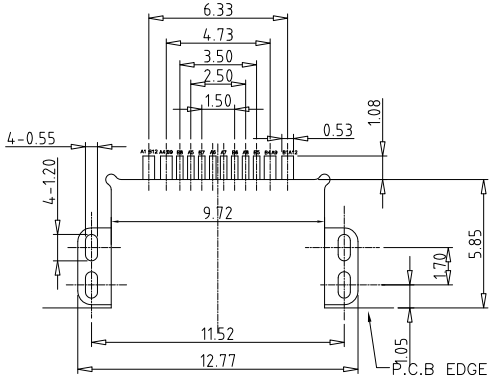

RECOMMENDED PCB LAYOUT(TOP VIEW)
DEFAULT TOLERANCE:±0.05

1. MATERIAL SPECIFICATION:
   1.1.HOUSING:HIGH TEMPERATURE RESISTANT PLASTIC,UL94 V-0.
   1.2.CONTACTS:High Conductivity Copper
   1.3.MID PLATE: STAINLESS STEEL
   1.4.FRONT SHELL: STAINLESS STEEL
2. MECHANICAL PERFORMANCE,
   2.1.INSERTION FORCE: 5~20N.
   2.2.REMOVAL FORCE: 8~20N.
   2.3.DURABILITY: 10000 CYCLES.
3. ELECTRICAL PERFORMANCE,
   3.1. CURRENT RATING:3.0A
   VOLTAGE RATING:12V
   3.2. LLCR:
   VBUS & GND PINS AND OTHER PINS: 40mΩ/PIN MAX.
   SHIELD: 50mΩ/MAX.
   3.3.INSULATION RESISTANCE: 100MΩ MIN
   3.4.DIELECTRIC WITHSTAND VOLTAGE,AC 100V FOR 1 MINUTE.
4. ENVIRONMENTAL PERFORMANCE:
   OPERATING TEMPERATURE: -25°C~+85°C.
5. IR REFLOW:
   THE PEAK TEMPERATURE ON THE BOARD SHALL BE MAINTAINED FOR 10 SECONDS AT 260°C.

USB TYPE-C PIN ASSIGNMENTS

PIN NUMBER	SIGNAL NAME	PIN NUMBER	SIGNAL NAME
A1	GND	B12	GND
A4	VBUS	B9	VBUS
A5	CC1	B8	SBU2
A6	Dp1	B7	Dn2
A7	Dn1	B6	Dp2
A8	SBU1	B5	CC2
A9	VBUS	B4	VBUS
A12	GND	B1	GND

Unless Otherwise specified, other tolerance are:

X.	±0.40	X°.	±5°
X.X	±0.30	X.X°	±4°
X.XX	±0.25	X.XX°	±3°
X.XXX	±0.15	X.XXX°	±2°

APPR.	LUCKY/2023.05.25
CHKD.	LUCKY/2023.05.25
DRAW.	Roy/2023.05.25

Pb RoHS PROCESS COMPLIANT

MUP® MUP INDUSTRIAL CO.,LTD.

NAME:	**USB Type C Waterproof Receptacle**
MODEL No:	**MUP-U22409-1A**
TYPE :	**16PIN Mid Mount CH=0.38 Waterproof 1.4m**
PRAT NO. :	U22409-1A
DWG NO. :	DWG-U22409-1A-001

PROJ.	UNIT	SCALE	SHEET	REVISION
	mm	1:1	1/2	1

REV.	DESCRIPTION OF REVISIONS	APPR.	CHKD.	DRAW.	DATE
1	Original reversion	lucky	lucky	Roy	2023.05.25

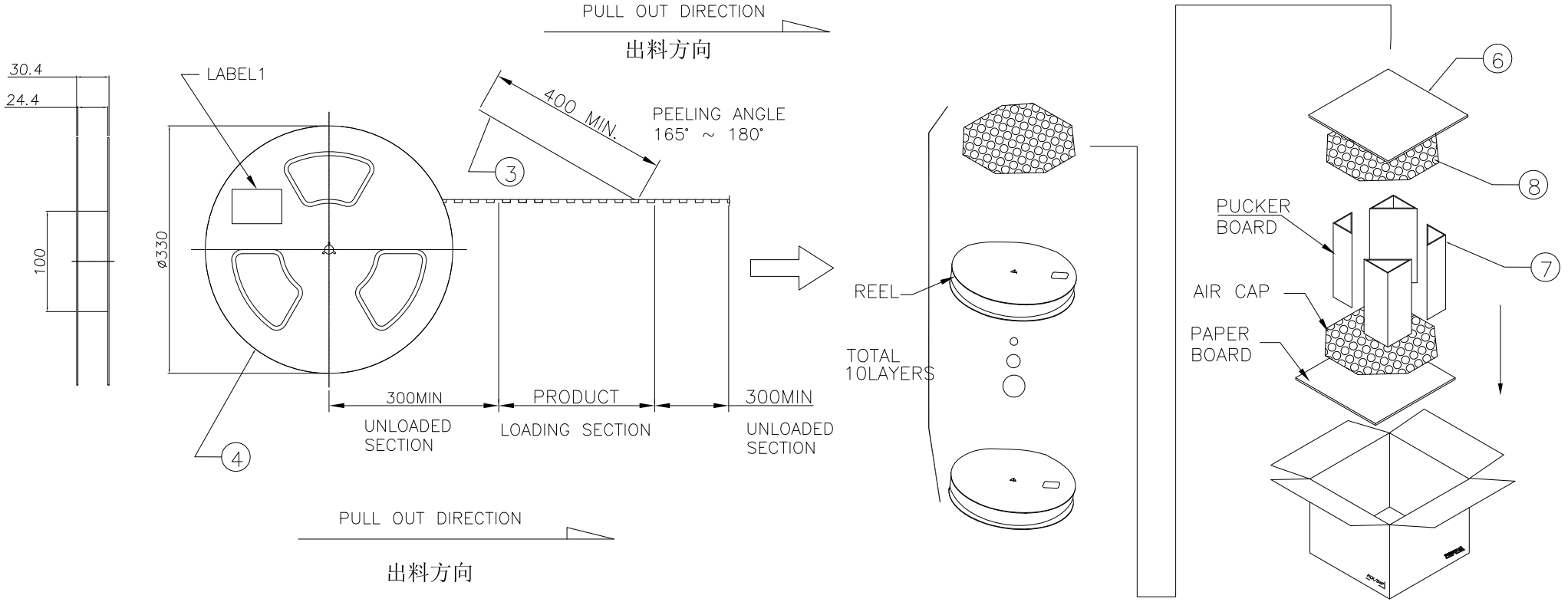

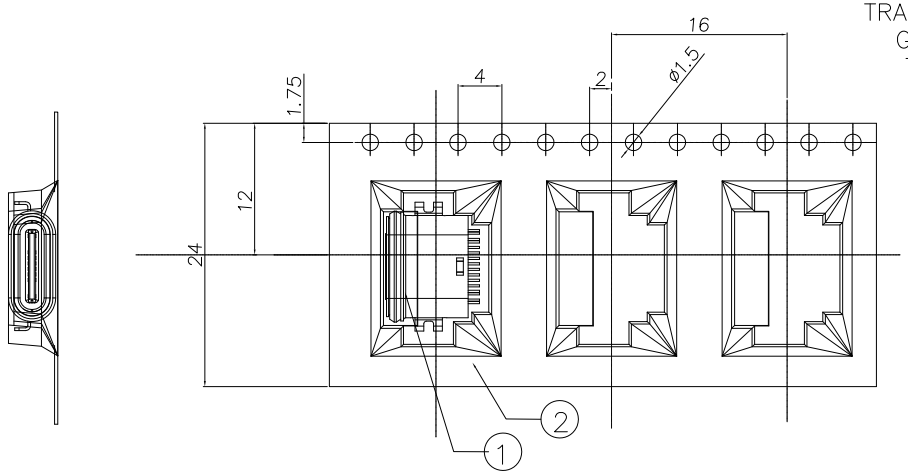

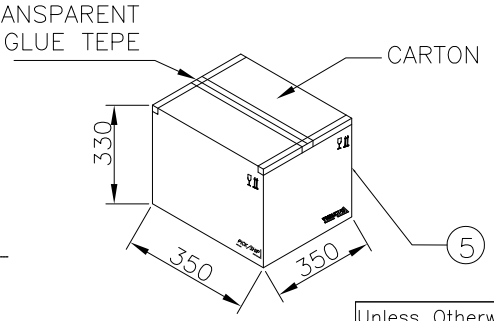

说明：

1,将检查合格的产品，放入承载带中，一盘包装800PCS;

2,将11盘承载带放入纸箱中;

3,将纸箱封装好，贴上标签.

每箱数量	净重(Kg)	毛重 (Kg)
8800PCS	xxx	xxx

Unless Otherwise specified, other tolerance are:			
X.	±0.40	X°.	±5°
X.X	±0.30	X.X°	±4°
X.XX	±0.25	X.XX°	±3°
X.XXX	±0.15	X.XXX°	±2°

APPR.	LUCKY/2023.05.25
CHKD.	LUCKY/2023.05.25
DRAW.	Roy/2023.05.25

RoHS PROCESS COMPLIANT

MUP® MUP INDUSTRIAL CO.,LTD.

NAME:	USB Type C Waterproof Receptacle
MODEL No:	MUP-U22409-1A
TYPE :	16PIN Mid Mount CH=0.38 Waterproof 1.4m
PRAT NO. :	U22409-1A
DWG NO. :	DWG-U22409-1A-001

PROJ.	UNIT	SCALE	SHEET	REVISION
	mm	1:1	2/2	1