| REV. | DESCRIPTION OF REVISIONS | APPR. | DRAW. | RELEASE | DATE |
|---|---|---|---|---|---|
| | | | | | |
| | | | | | |

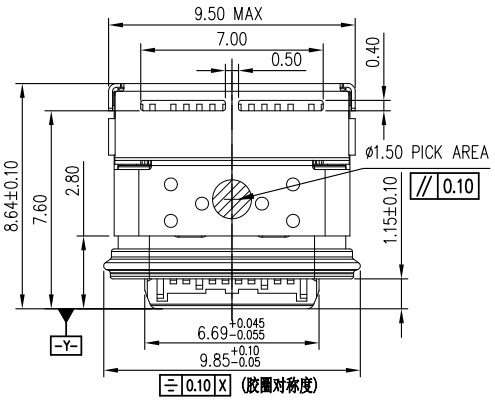


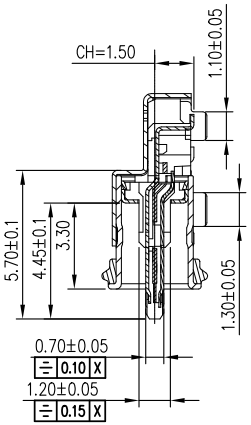

SECTION C-C(SC 1:1)

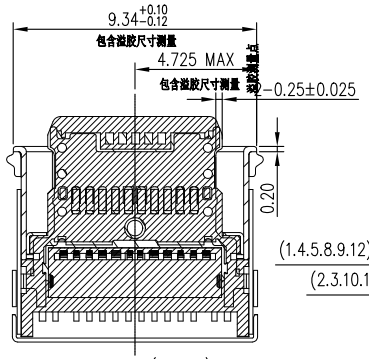

SECTION A-A(SC 1:1)

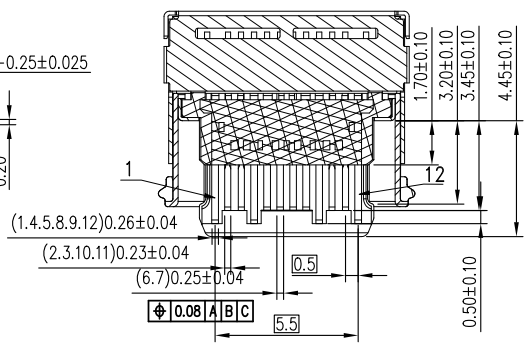

SECTION B-B(SC 1:1)

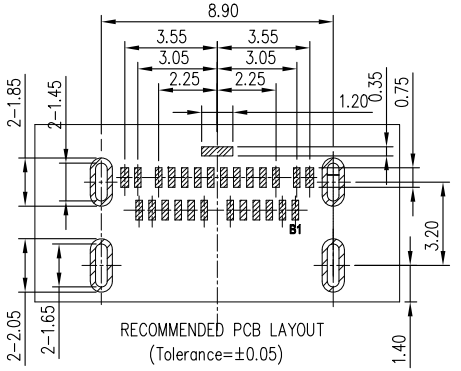


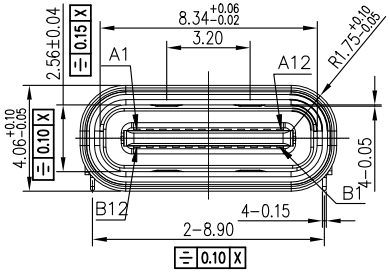


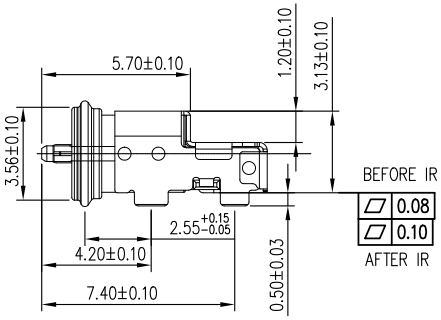


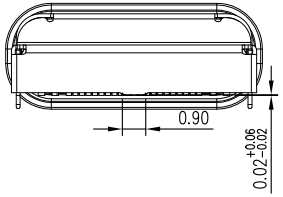


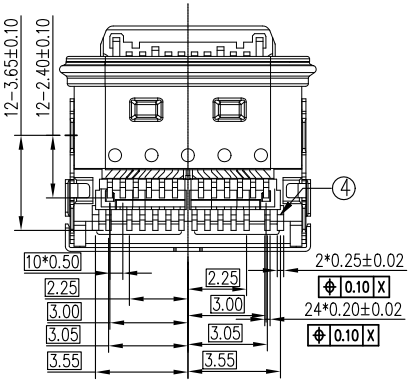


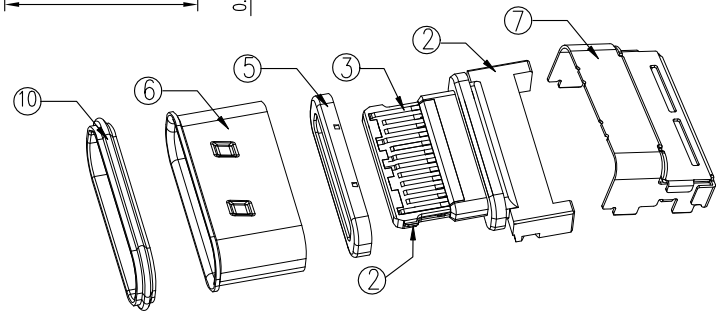


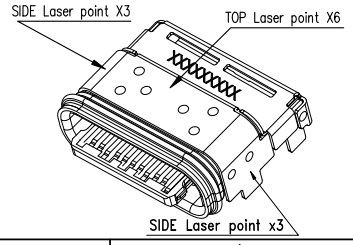


NOTES:
1. MECHANNICAL:
 1.1: MATING FORCE: 0.5~2.0Kgf
 1.2: UMMATING FORCE:Initial: 0.8~2.0Kgf
  After 500 to 10000 Cycles: 0.6~2.0Kgf
 1.3: FREQUENCE:200±50 Cycles/HOUR 10000 Cycles
2. ELECTRICAL CHARACTERISTICS:
 2.1: CURRENT RATING:1.25A/PIN FOR VBUS AND GND
  0.25A FOR OTHER PINS
 2.2:INITIAL CONTACT RESISTANCE: 40mΩ Max.
 2.3:INSULATION RESISTANCE:100MΩ Min.
 2.4:WITHSTANDING VOLTAGE:100V AC,1Minute
3. ENVIRONMENTAL
 TEMPERATRUE RANGE: -40° C TO +85° C

| Pin | Signal Name | Mating Sequence | Pin | Signal Name | Mating Sequence |
|---|---|---|---|---|---|
| A1 | GND | First | B12 | GND | First |
| A2 | SSTXp1 | Second | B11 | SSRXp1 | Second |
| A3 | SSTXn1 | Second | B10 | SSRXn1 | Second |
| A4 | $V_{BUS}$ | First | B9 | $V_{BUS}$ | First |
| A5 | CC1 | Second | B8 | SBU2 | Second |
| A6 | Dp1 | Second | B7 | Dn2 | Second |
| A7 | Dn1 | Second | B6 | Dp2 | Second |
| A8 | SBU1 | Second | B5 | CC2 | Second |
| A9 | $V_{BUS}$ | First | B4 | $V_{BUS}$ | First |
| A10 | SSRXn2 | Second | B3 | SSTXn2 | Second |
| A11 | SSRXp2 | Second | B2 | SSTXp2 | Second |
| A12 | GND | First | B1 | GND | First |
| SHELL | | GND | SHELL | | GND |

| 项目 | 组成部件 | 用量 | 材质/处理 |
|---|---|---|---|
| 9 | 密封圈 | 1PCS | 硅胶,依照客户需求 |
| 8 | 胶水 | 1PCS | 硅胶，黑色(MicroCoat 423-06 ) |
| 7 | 外壳 | 1PCS | SUS304 ,T=0.15.镀镍50u" MIN. |
| 6 | 内拉伸壳 | 1PCS | SUS304 ,T=0.20.镀镍50u" MIN. |
| 5 | EMI拉伸壳 | 1PCS | SUS304 ,T=0.12.镀镍50u" MIN. |
| 4 | 上排端子 | 1SET | C18140,T=0.12.底层镀镍 50-100u",功能接触区单面 |
| 3 | 下排端子 | 1SET | 刷镀 Au 30u",焊接区双面镀金 G/F. |
| 2 | 中板 | 1PCS | SUS301-1/4 H，镀镍50u" MIN. |
| 1 | 塑胶 | 1PCS | PA46(HFX315) BLACK |

Unless otherwise specified, other tolerance are:

| | | | |
|---|---|---|---|
| X | ±0.35 | X° | ±5° |
| X.X | ±0.25 | X.X° | ±4° |
| X.XX | ±0.15 | X.XX° | ±3° |
| X.XXX | ±0.10 | X.XXX° | ±2° |

PROJ. | UNIT mm | SCALE 3:1

CUSTOMER DRAWING

P/b RoHS PROCESS COMPLIANT

MUP® MUP INDUSTRIAL CO.,LTD.

NAME: **USB TYPE C CONNECTOR**

MODEL NO: **MUP-U20207-1A**

TYPE : TYPE C/F 24P 防水IP67 On-mount Dual SMT

| | | |
|---|---|---|
| DRAWN | HUABO 2022/1/11 | DWG NO.: DWG-MUP-U20207-001 |
| CHECKED | Jimmy 2022/1/11 | |
| APPROVAL | Zoey 2022/1/11 | SHEET 1/1 / REVISION X1 |