REV.	DESCRIPTION OF REVISIONS	APPR.	CHKD.	DRAW.	DATE
1	NEW			HUABO	2024/01/02

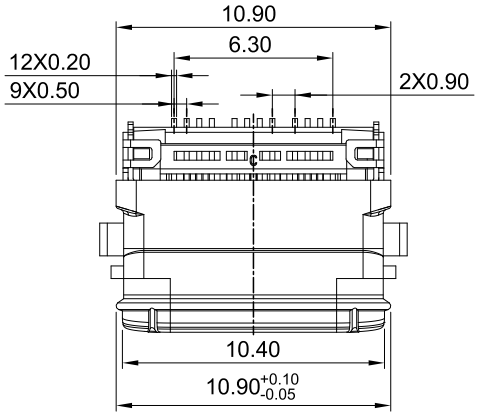

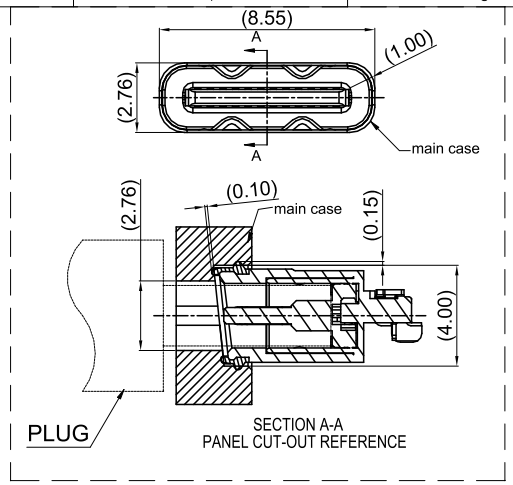

IP-X8

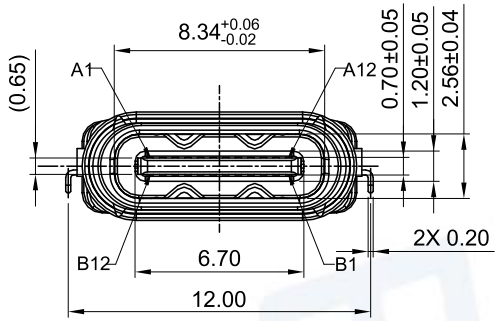

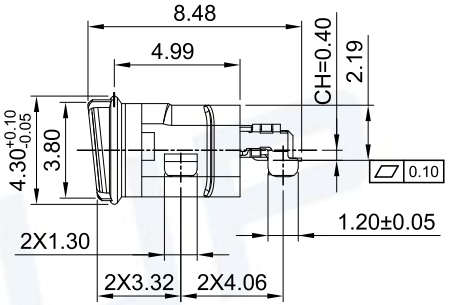

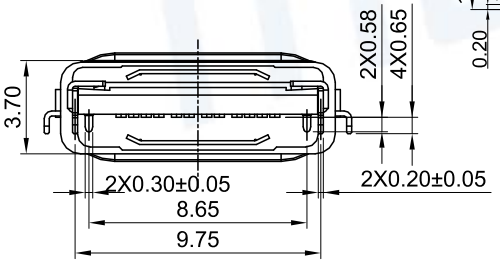

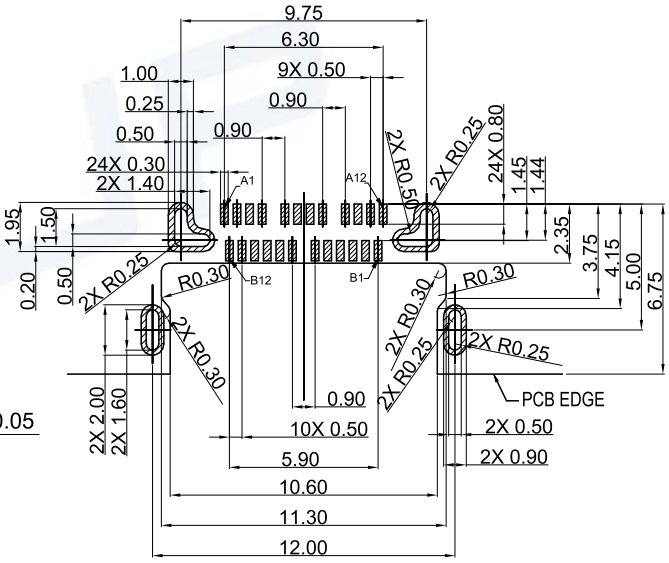

RECOMMENDED PCB LAYOUT
(Tolerance=±0.05)

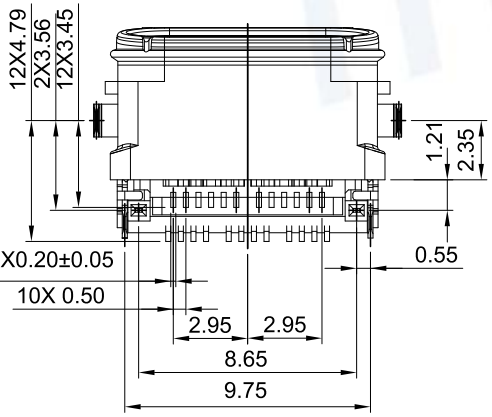

注释：

1. 通用特性：
   1.1 共面度：0.10 Max.
   1.2 额定电流：5A
   1.3 接触电阻：40Ω Min/ 绝缘电阻：100MΩ Min
   1.4 耐电压： 100伏交流
   1.5 力学特性：初始插入力：5~20N 拔出力：8~20N
   1.6 耐久后拔出力：6~20N
   1.7 耐久性：10000次
2. 防水等级 IPX8

ITEM	DESCRIPTION	Q'TY	MATERIAL	FINISH
7	MID PLATE	1	STAINLESS STEEL	SOLDER NICKEL: 50U" MIN
6	TERMINAL	1	COPPER ALLOY	MATING AREA: Contact area:Gold plated over Nicke
5	SHELL	1	STAINLESS STEEL	SOLDER NICKEL: 50U" MIN
4	SOLDER PIN	1	STAINLESS STEEL	SOLDER NICKEL: 50U" MIN
3	SHELL HOUSING	1	High-TEMP. PLASTIC	BLACK
2	LIM	1	SILICA GEL	BLACK
1	MAIN HOUSING	1	High-TEMP. PLASTIC	BLACK

Pin:

A1	A2	A3	A4	A5	A6	A7	A8	A9	A10	A11	A12
GND	TX1+	TX1-	Vbus	CC1	D+	D-	SBU1	Vbus	RX2-	RX2+	GND
GND	RX1+	RX1-	Vbus	SBU2	D-	D+	CC2	Vbus	TX2-	TX2+	GND
B12	B11	B10	B9	B8	B7	B6	B5	B4	B3	B2	B1

RoHS
PROCESS COMPLIANT

Unless otherwise specified, other tolerance are:

X	±0.35	X°	±5°
X.X	±0.30	X.X°	±4°
X.XX	±0.20	X.XX°	±3°
X.XXX	±0.10	X.XXX°	±2°

PROJ. | UNIT mm | SCALE 1:1

CUSTOMER DRAWING

MUP® MUP INDUSTRIAL CO.,LTD.

NAME: **USB Type-c connector**

MODEL NO: **MUP-U22004-01**

TYPE : 24PIN 防水IPX8沉板双贴斜口CH0.4

DRAWN	Huabo 2024/01/02	DWG NO.: DWG-U22004-01-01
CHECKED	Keey 2024/01/02	
APPROVAL	Simon 2024/01/02	SHEET 1/2 / REVISION 1

REV.	DESCRIPTION OF REVISIONS	APPR.	CHKD.	DRAW.	DATE
1	NEW			HUABO	2024/01/02

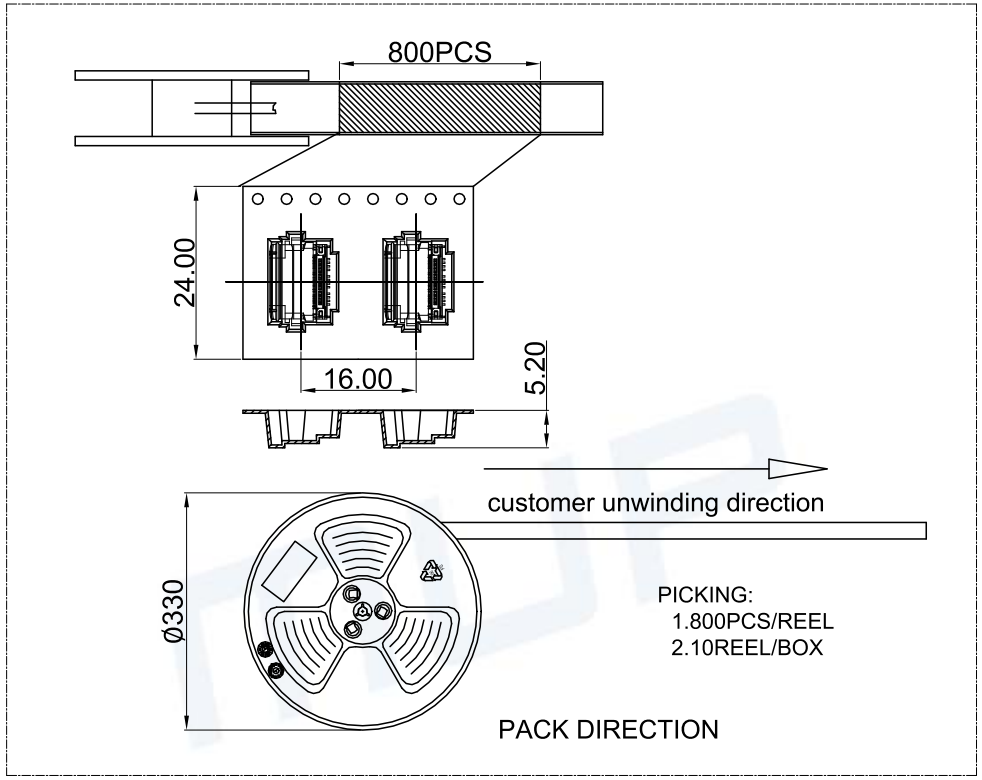

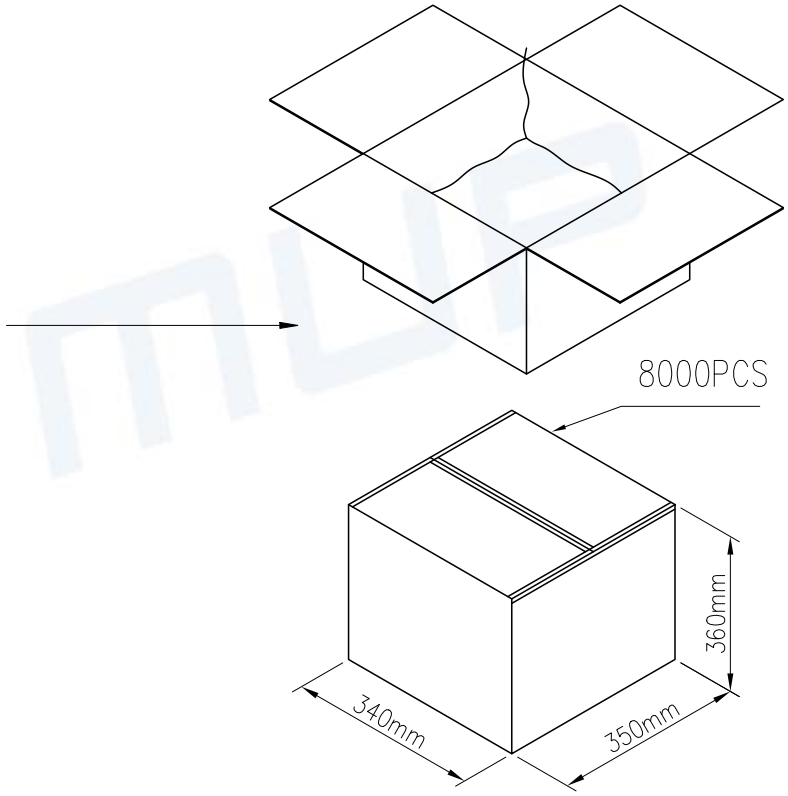

外包装箱规格

	REEL	CARTON
CONNECTOR (PCS)	800	8000

PROCESS COMPLIANT

Unless otherwise specified, other tolerance are:

X	±0.35	X°	±5°
X.X	±0.30	X.X°	±4°
X.XX	±0.20	X.XX°	±3°
X.XXX	±0.10	X.XXX°	±2°

PROJ. | UNIT mm | SCALE 1:1

CUSTOMER DRAWING

MUP® MUP INDUSTRIAL CO.,LTD.

NAME: **USB Type-c connector**

MODEL NO: **MUP-U22004-01**

TYPE : 24PIN 防水IPX8沉板双贴斜口CH0.4

DRAWN	Huabo 2024/01/02	DWG NO.: DWG-U22004-01-01
CHECKED	Keey 2024/01/02	
APPROVAL	Simon 2024/01/02	SHEET 2/2 / REVISION 1