REV.	DESCRIPTION OF REVISIONS	APPR.	CHKD.	DRAW.	DATE
1	NEW			Xfang	2024/06/02

IP-X8

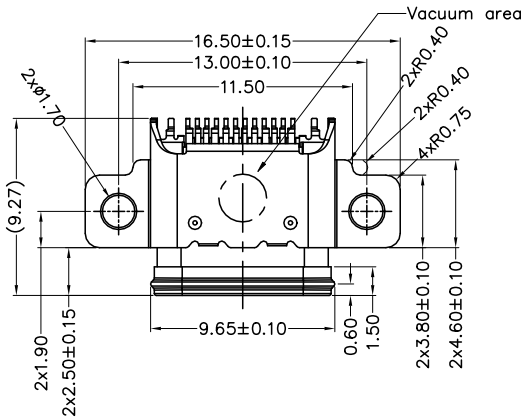

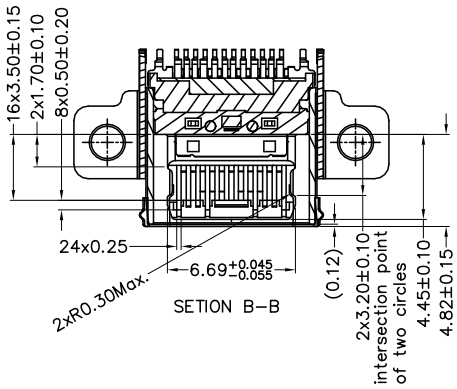

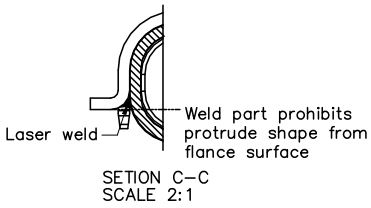

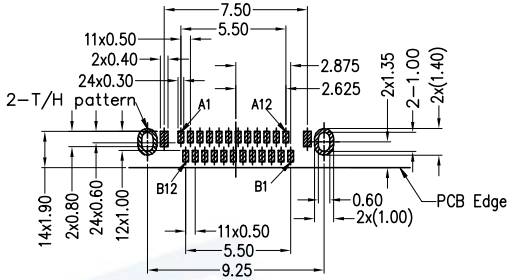

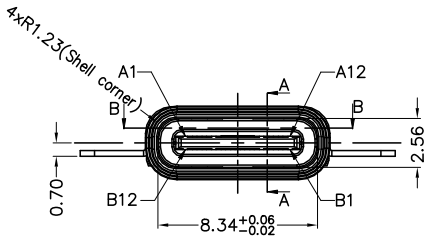

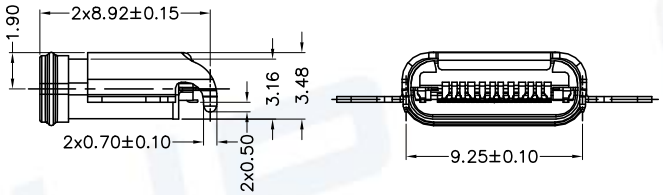

Remark:
1.MECHANICAL PERFORMANCE,
1-1.INSERTION FORCE: 5~20N.
1-2.EXTRACTION FORCE: 8~20N INITIAL,6~20N AFTER TEST;
1-3.DURABILITY: 10000 CYCLES.
2.ELECTRICAL PERFORMANCE,
2-1. CURRENT RATING: 5A MIN FOR VBUS,0.25A MIN FOR OTHERS
VOLTAGE RATING: 20V MAX.
2-2. LLCR: VBUS & GND PINS AND OTHER PINS: 40mΩ/PIN MAX.
2-3.INSULATION RESISTANCE: 100MΩ MIN
2-4.DIELECTRIC WITHSTAND VOLTAGE,AC 100V FOR 1 MINUTE.
3.The waterproof grade is IPX8(1.5m depth of water).

4.Environmental Characteristics
Salt Spray: 24H
IR Reflow: Peak Temperature 240±5℃ (Time: 30S)
Operating Temperature Range: -30℃ to +85℃.
Storage Temperature Range: -20℃ to +60℃.
Relative Humidity: 15~70%RH
Storage Life : 6 Months

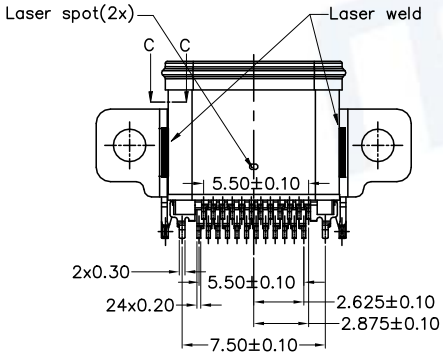

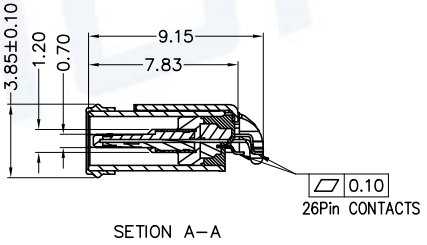

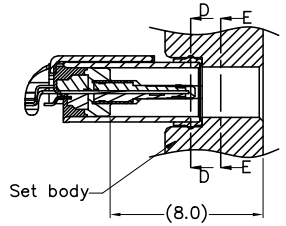

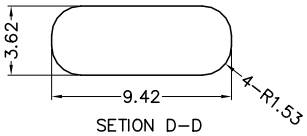

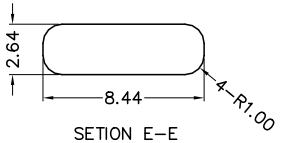

ITEM	DESCRIPTION	Q'TY	Material	Finish
8	Liquid Rubber	1	Si	Color: Black
7	Rubber	1	Si	Color: Black
6	Insertmolding	1	High-TEMP. PLASTIC	Color: Black
5	Contact	24	COPPER ALLOY, T=0.12	Contact area: Gold plated over Nicke
4	Mid Plate	1	STAINLESS STEEL, T=0.15	Ni 40u"Min.+Solder area: Au
3	GND Plate	2	STAINLESS STEEL, T=0.10	None
2	Shell	1	STAINLESS STEEL, T=0.30	Ni: 40u" Min.
1	Frame	1	STAINLESS STEEL, T=0.30	Ni: 40u" Min.

PIN DEFINITION: (GND pins(A1,A12,B1,B12) and Mid Plate should connect together in PCB circuit.)

	A1	A2	A3	A4	A5	A6	A7	A8	A9	A10	A11	A12
Mid Plate	GND	TX1+	TX1-	VBus	CC1	D+	D-	SBU1	VBus	RX2-	RX2+	GND
	GND	RX1+	RX1-	VBus	SBU2	D-	D+	CC2	VBus	TX2-	TX2+	GND
	B12	B11	B10	B9	B8	B7	B6	B5	B4	B3	B2	B1

RoHS
PROCESS COMPLIANT

Unless otherwise specified, other tolerance are:

X	±0.35	X°	±5°
X.X	±0.30	X.X°	±4°
X.XX	±0.20	X.XX°	±3°
X.XXX	±0.10	X.XXX°	±2°

PROJ. | UNIT mm | SCALE 1:1

CUSTOMER DRAWING

MUP® MUP INDUSTRIAL CO.,LTD.

NAME: **USB Type-c connector**

MODEL NO: **MUP-U22005-01**

TYPE : 24PIN 防水母座双排SMT

DRAWN	Xfang 2024/06/02	DWG NO.: DWG-U22005-01-01
CHECKED	Huabo 2024/06/02	
APPROVAL	Simon 2024/06/02	SHEET 1/2 / REVISION 1

REV.	DESCRIPTION OF REVISIONS	APPR.	CHKD.	DRAW.	DATE
1	NEW			Xfang	2024/06/02

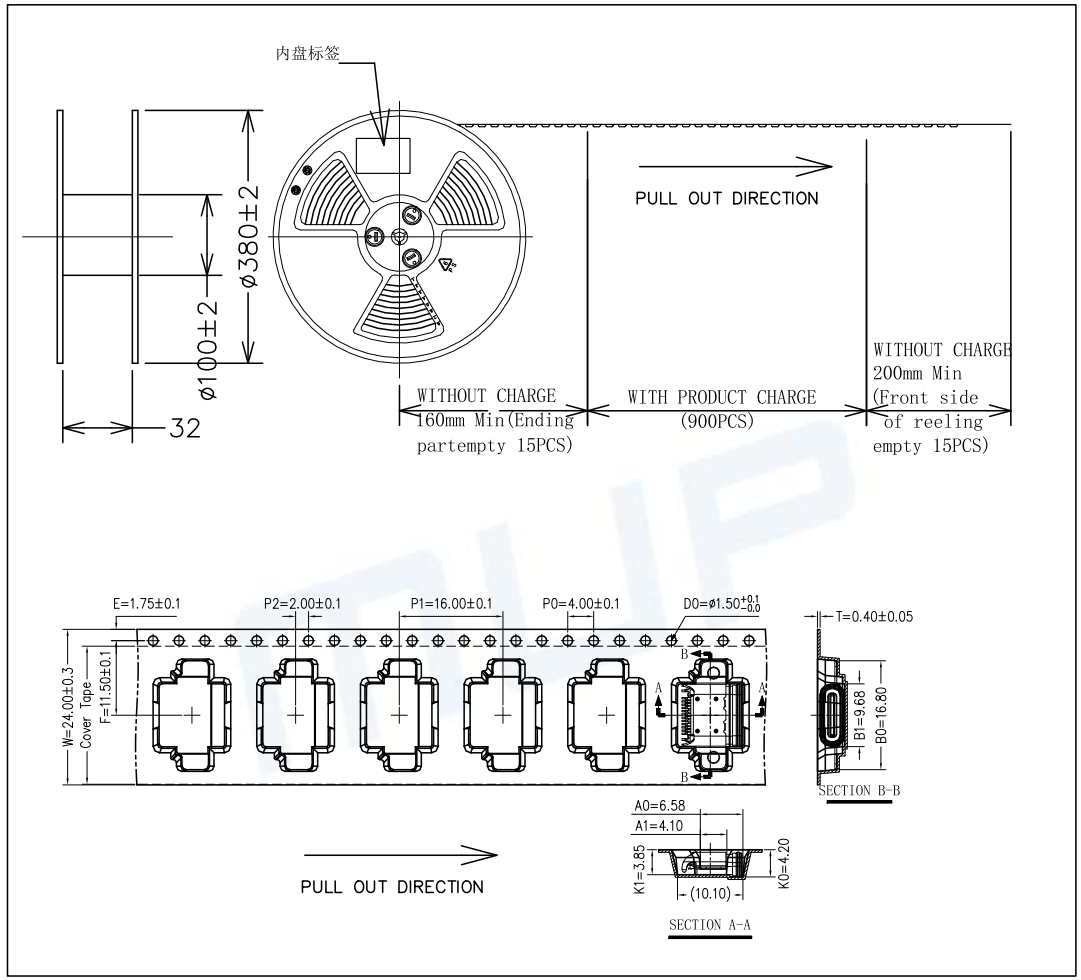

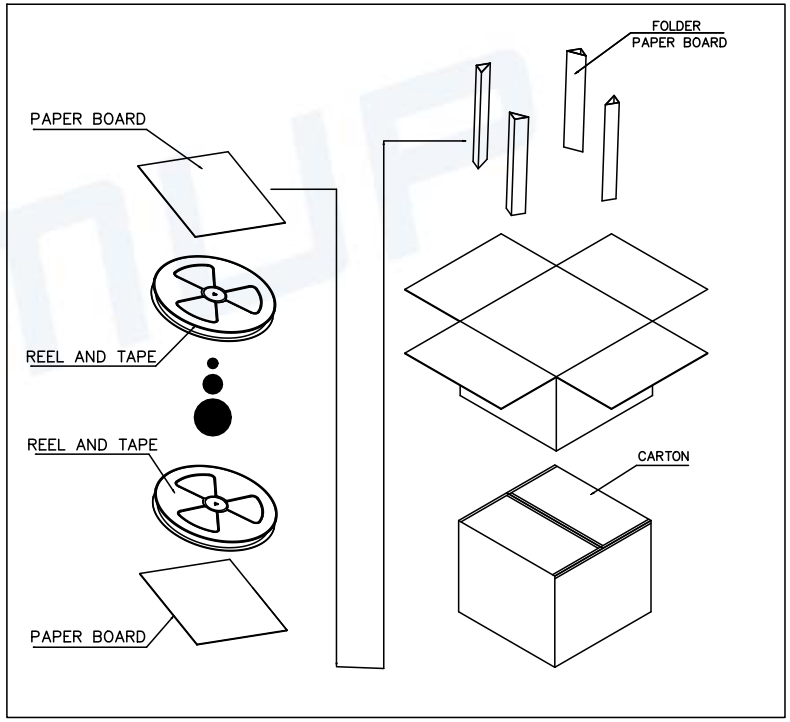

	REEL	CARTON
CONNECTOR (PCS)	900	9000

Unless otherwise specified, other tolerance are:

X	±0.35	X°	±5°
X.X	±0.30	X.X°	±4°
X.XX	±0.20	X.XX°	±3°
X.XXX	±0.10	X.XXX°	±2°

PROJ. | UNIT mm | SCALE 1:1

CUSTOMER DRAWING

RoHS PROCESS COMPLIANT

MUP® MUP INDUSTRIAL CO.,LTD.

NAME: **USB Type-c connector**

MODEL NO: **MUP-U22005-01**

TYPE : 24PIN 防水母座双排SMT

DRAWN	Xfang 2024/06/02	DWG NO.: DWG-U22005-01-01
CHECKED	Huabo 2024/06/02	
APPROVAL	Simon 2024/06/02	SHEET 2/2 / REVISION 1