REV.	DESCRIPTION OF REVISIONS	APPR.	CHKD.	DRAW.	DATE
1	Original reversion	lucky	lucky	Roy	2023.05.25

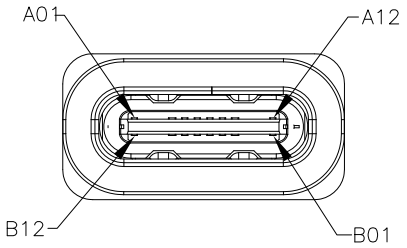

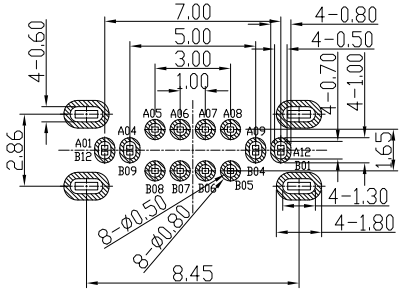

RECOMMENDED P.C.B. LAYOUT (T:1.00mm)

TOLERANCE UNSPECIFIED ±0.05mm

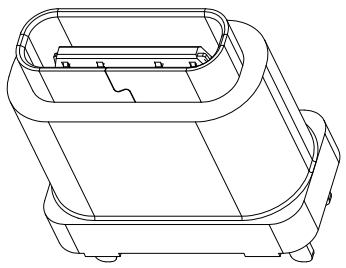

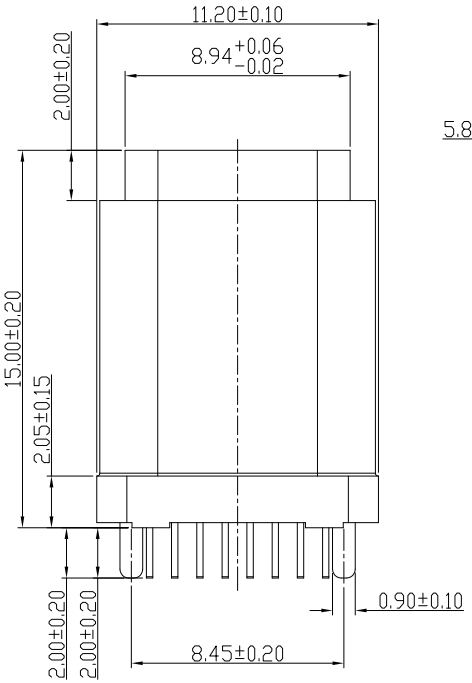

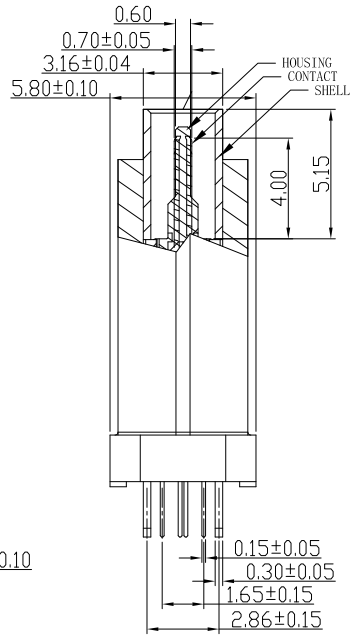

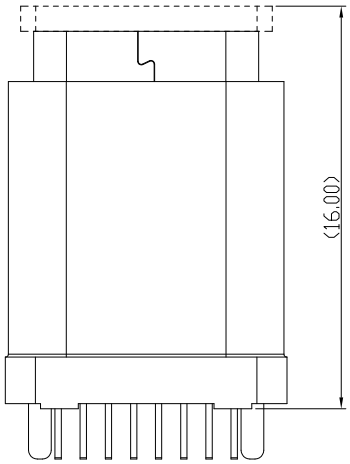

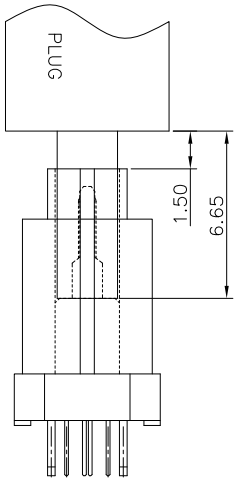

AFTER MATING

NOTE:

1. MATERIAL SPECIFICATION:
   1. HOUSING:LCP E130i, UL94V-0.
   2. SHELL HOUSING:NY 9T, UL94V-0.
   3. CONTACTS:C7025 or C2680
   4. MID PLATE: SUS301
   5. FRONT SHELL: SUS304
2. PLATING SPECIFICATION:
   2-1. CONTACTS:
   Ni 50u" MIN. UNDER PLATED OVER ALL.
   Au PLATED ON THE FUNCTIONAL AREA OF CONTACT.
   (GOLD PLATING THICKNESS FOLLOW THE P/N)
   PLATING SPECIFICATIONS OF THE SOLDER AREA FOLLOW THE P/N
   2-2. FRONT SHELL:
   Ni 30u" MIN. UNDER PLATED OVER ALL.
   2-3. MID PLATE:
   CLEAR ONLY
3. MECHANICAL PERFORMANCE,
   3-1. INSERTION FORCE: 0.5~2.0kgf.
   3-2. REMOVAL FORCE: 0.8kgf~2.0kgf.
   3-3. DURABILITY: 10000 CYCLES.
4. ELECTRICAL PERFORMANCE,
   4-1. CURRENT RATING:3.0A
   VOLTAGE RATING:5.0V
   4-2. LLCR:
   VBUS & GND PINS AND OTHER PINS: 40mΩ/PIN MAX.
   SHIELD: 50mΩ/MAX.
   4-3. INSULATION RESISTANCE: 100MΩ MIN
   4-4. DIELECTRIC WITHSTAND VOLTAGE, AC 100V FOR 1 MINUTE.
5. ENVIRONMENTAL PERFORMANCE:
   OPERATING TEMPERATURE: -25° C~+85° C.
   THE PEAK TEMPERATURE ON THE BOARD SHALL
   BE MAINTAINED FOR 10 SECONDS AT 260° C.
6. WATER PROOFNESS:THISPRODUCTIS BASED ON IPX7.

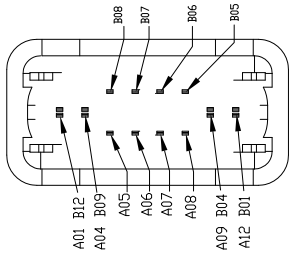

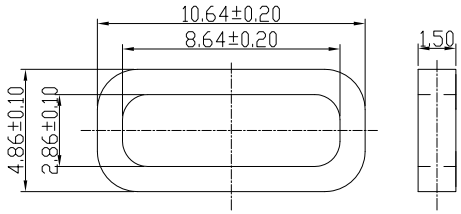

PIN NUMBER	A1	A2	A3	A4	A5	A6	A7	A8	A9	A10	A11	A12
SIGNAL NAME	GND			VBUS	CC1	Dp1	Dn1	SBU1	VBUS			GND
PIN NUMBER	B12	B11	B10	B9	B8	B7	B6	B5	B4	B3	B2	B1
SIGNAL NAME	GND			VBUS	SBU2	Dn2	Dp2	CC2	VBUS			GND

Unless Otherwise specified, other tolerance are:

X.	±0.40	X°.	±5°
X.X	±0.30	X.X°	±4°
X.XX	±0.25	X.XX°	±3°
X.XXX	±0.15	X.XXX°	±2°

APPR.	LUCKY/2023.05.25
CHKD.	LUCKY/2023.05.25
DRAW.	Roy/2023.05.25

Pb RoHS PROCESS COMPLIANT

MUP® MUP INDUSTRIAL CO.,LTD.

NAME: **USB Type C Waterproof Receptacle**

MODEL No: **MUP-U23015-3A**

TYPE : **16PIN Vertical 15H Waterproof IPX7**

PRAT NO. :	DWG NO. :
U23015-3A	DWG-U23015-3A-001

PROJ.	UNIT	SCALE	SHEET	REVISION
	mm	1:1	1/2	1

REV.	DESCRIPTION OF REVISIONS	APPR.	CHKD.	DRAW.	DATE
A	Original reversion	lucky	lucky	Roy	2023.05.25

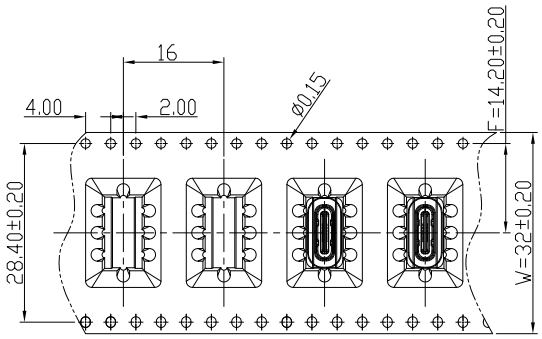

① 产品入载带示意图

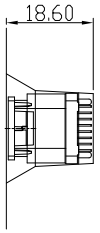

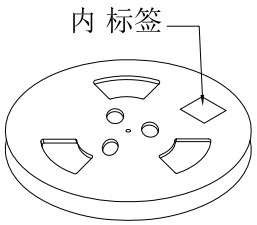

② 卷盘贴标签示意图

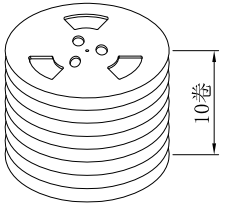

③ 10盘产品叠层示意图

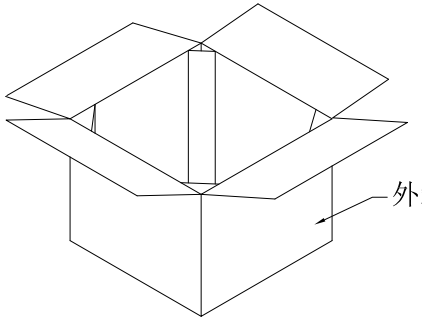

④ 产品入外箱示意图

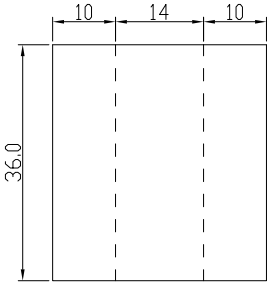

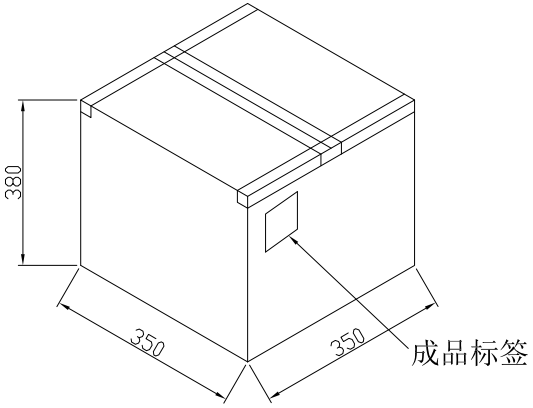

⑤ 外箱封箱示意图

包装说明：

1. 将检验好的成品;插板脚朝下放入载带底部;每卷装200PCS产品;具体如图一所示
2. 将包装好的产品;每盘必需贴上内标签;具体如图二所示
3. 将贴好内标签的产品每10盘叠;具体如图三所示
5. 装好后并封好纸箱及贴好相关标签;具体如图五所示;
   (产品包装的标签，如客户有要求，请按客户要求包装出货)
6. 载带前面留14PCS空格，后面留14PCS空格
7. COVER与CARRY剥离力:50-125g,速度:300mm/分钟左右,
   剥离角度:165° -180°

Unless Otherwise specified, other tolerance are:			
X.	±0.40	X°.	±5°
X.X	±0.30	X.X°	±4°
X.XX	±0.25	X.XX°	±3°
X.XXX	±0.15	X.XXX°	±2°

APPR.	LUCKY/2023.05.25
CHKD.	LUCKY/2023.05.25
DRAW.	Roy/2023.05.25

MUP® MUP INDUSTRIAL CO.,LTD.

NAME:	USB Type C Waterproof Receptacle
MODEL No:	MUP-U23015-3A
TYPE :	16PIN Vertical 15H Waterproof IPX7
PRAT NO. :	U23015-3A
DWG NO. :	DWG-U23015-3A-001
PROJ.	
UNIT	mm
SCALE	1:1
SHEET	2/2
REVISION	1