REVISIONS			
REV.	ECN NO.	DESCRIPTION	DATE
A1		\	2022.06.06

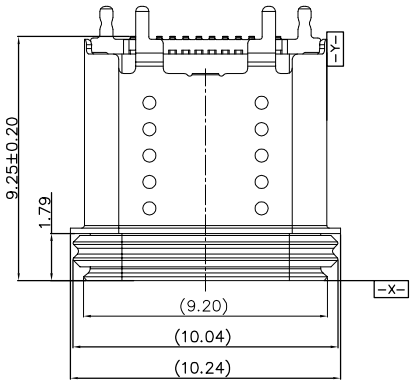

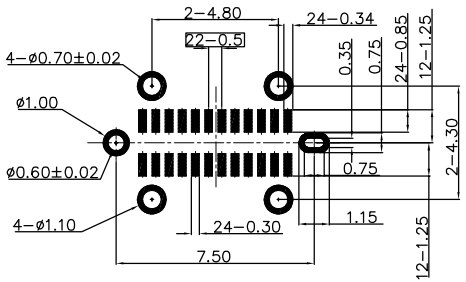

RECOMMENDED PCB LAYOUT(TOP VIEW)

THICKNESS T=1.00±0.05mm

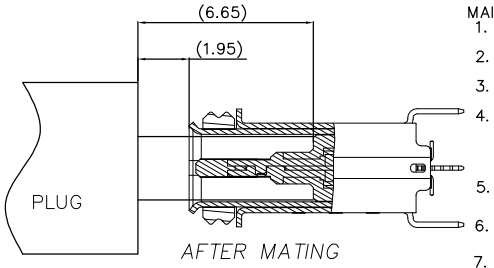

AFTER MATING

MAIN SPECIFICATION:

1. VOLTAGE/CURRENT RATING: 5V/5.0 A
   电流：5V/5.0 A
2. DIELECTRIC WITHSTAND VOLTAGE: 100VAC
   耐电压：100VAC MAX
3. TEMPERATURE RANGE: -30 ℃ ~ 85 ℃
   使用温度：-30 ° C ~ 85 ° C
4. INITIAL CONTACT RESISTANCE: 40 MILLIONHM MAX
   初始接触电阻：40 MILLIONHM MAX
   AFTER TEST: 50 MILLIONHM MAX ALL CONTACTS.
   寿命后接触电阻：50 MILLIONHM MAX
5. INSULATION RESISTANCE: 100 MEGOHMS MIN.
   绝缘阻抗：100 MEGOHMS MIN.
6. INITIAL INSERTION FORCE 5-20N,EXTACTION FORCE:8-20N
   初始插入力：5-20N；初始拔出力：8-20N。
7. AFTER DURABILITY(10000CYCLES) INSERTION FORCE 5-20N EXTACTION FORCE:6-20N
   寿命后（10000次）插入力：5-20N；拔出力：6-20N。
8. WATERPROOF GRADE:IPX7
   防水等级：IPX7.

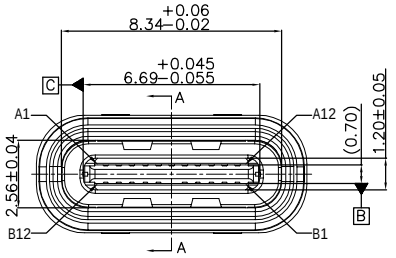

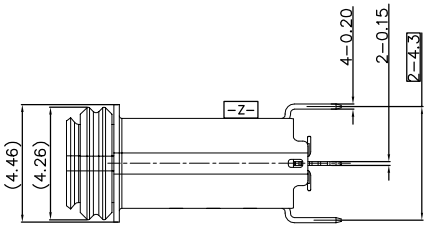

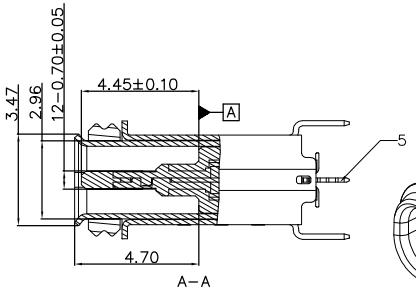

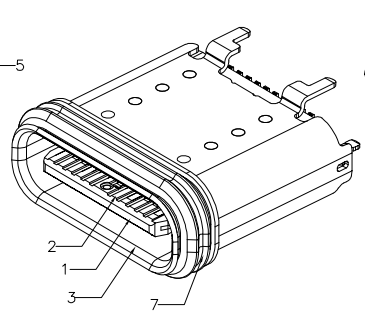

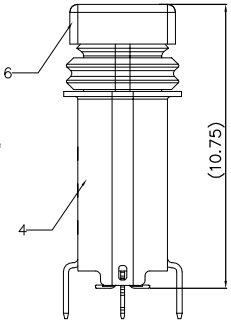

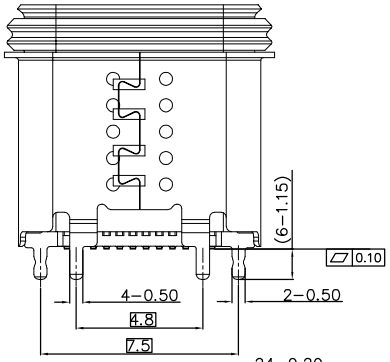

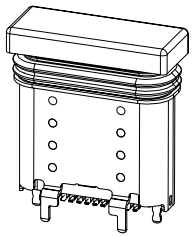

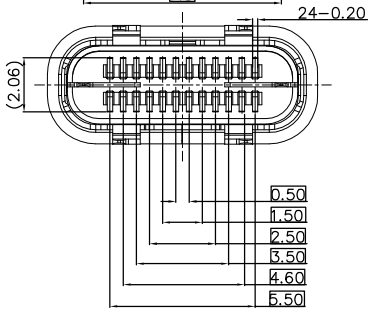

TABLE

USB Type-C Pin Assignments			
Pin Number	Signal Name	Pin Number	Signal Name
A1	GND	B12	GND
A2	SSTXp1	B11	SSRXp1
A3	SSTXn1	B10	SSRXn1
A4	VBUS	B9	VBUS
A5	CC1	B8	SBU2
A6	Dp1	B7	Dn2
A7	Dn1	B6	Dp2
A8	SBU1	B5	CC2
A9	VBUS	B4	VBUS
A10	SSRXn2	B3	SSTXn2
A11	SSRXp2	B2	SSTXp2
A12	GND	B1	GND

Item	ASSEMBLY NO.	PART NAME.	QUANTITY	NOTE
7	PUB050-2411-C167-1H (24PIN)	SEALING	1	SILICON DIOXIDE
6		CAP	1	HIGH TEMPERATURE RESISTANT PLASTIC,UL94 V-0.
5		MID PLATE	1	STAINLESS STEEL,PLATED NICKEL 50u"MIN
4		OUTER SHELL	1	STAINLESS STEEL,PLATED NICKEL 50u"MIN
3		MAIN SHELL	1	STAINLESS STEEL,PLATING NICKEL 50u"MIN
2		CONTACT	24	COPPER ALLOY, NI PLATING OVER ALL,AU1u" PLATING ON CONTACT AREA,GOLD FLASH ON SOLDER AREA
1		OVER MOLDING	1	HIGH TEMPERATURE RESISTANT PLASTIC,UL94 V-0.

X.± 0.25	X.°±
.X± 0.20	.X°±5°
.XX± 0.15	.XX°±3°
.XXX±0.08	.XXX°±
UNITS:	mm

THESE DRAWINGS AND SPECIFICATIONS ARE THE PROPERTY OF JINJIA AND SHALL NOT BE REPRODUCED, COPIED OR CUED IN ANY MANNER WITHOUT THE PRIOR WRITTEN CONSENT OF JINJIA

Customer P/N: \
Customer REV.: \

PART NO: U23016-1A

APPD: Robin 2022.06.06

CHKD: Lucky 2022.06.06

DRAW: ROY 2022.06.06

MUP® MUP INDUSTRIAL CO.,LTD.

TITLE: 24P 立式防水型 H=9.25 mm

DWG NO: U23016-1A-0001

SCALE	SHEET	REV.
1:1	1/3	A1