TFT DISPLAY SPECIFICATION



RAYSTAR Optronics, Inc.
曜凌光電股份有限公司

曜凌光電股份有限公司
Raystar Optronics, Inc.
T: +886-4-2565-0761 | F: +886-4-2565-0760
salescontact@raystar-optronics.com | www.raystar-optronics.com

RFC35BY-AWW-DNN

General Specifications

- Size: 3.5 inch
- Dot Matrix: 320 x RGBx240(TFT) dots
- Module dimension: 76.84(W) x 63.84(H) x 3.27(D) mm
- Active area: 70.08 x 52.56 mm
- Dot pitch: 0.073 x 0.219 mm
- LCD type: TFT, Normally black, Transmissive
- View Direction: Wide View
- Driver IC: ST7272A
- Interface : 24-bit RGB
- Aspect Ratio: 4:3
- Backlight Type: LED, Normally White
- Touch Panel: Without Touch Panel
- Surface: Glare

RAYSTAR OPTRONICS

Interface

LCM PIN Definition

Pin No.	Symbol	Function
1	VLED-	Power for LED backlight cathode
2	VLED+	Power for LED backlight anode
3	GND	Ground
4	VCC	Power Supply
5	R0	Data bus
6	R1	Data bus
7	R2	Data bus
8	R3	Data bus
9	R4	Data bus
10	R5	Data bus
11	R6	Data bus
12	R7	Data bus
13	G0	Data bus
14	G1	Data bus
15	G2	Data bus
16	G3	Data bus
17	G4	Data bus
18	G5	Data bus
19	G6	Data bus
20	G7	Data bus
21	B0	Data bus
22	B1	Data bus
23	B2	Data bus

RAYSTAR OPTRONICS

24	B3	Data bus
25	B4	Data bus
26	B5	Data bus
27	B6	Data bus
28	B7	Data bus
29	GND	Ground
30	DCLK	Dot-clock signal and oscillator source
31	NC	No connect
32	HSYNC	Horizontal sync signal, default is negative polarity.
33	VSYNC	Vertical sync signal, default is negative polarity.
34	DE	Data input enable. Display access is enabled when DE is “H”.
35	NC	No connect
36	/RESET	Hardware reset
37-40	NC	No connect

RAYSTAR OPTRONICS

Contour Drawing

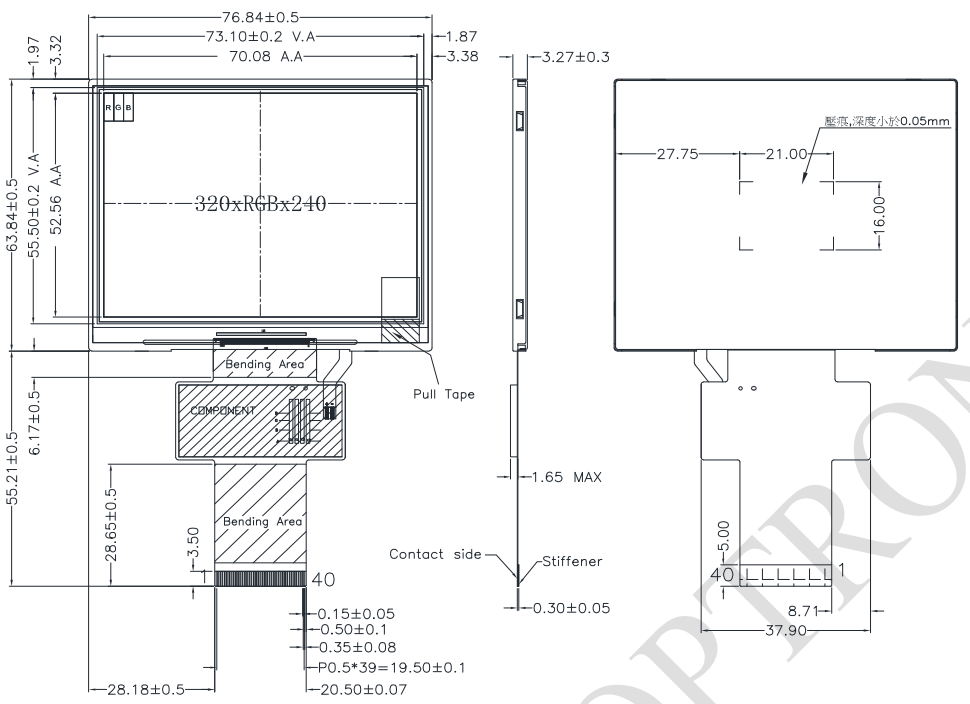

PIN NO	SYMBOL	PIN NO	SYMBOL
1	VLED-	21	B0
2	VLED+	22	B1
3	GND	23	B2
4	VCC	24	B3
5	R0	25	B4
6	R1	26	B5
7	R2	27	B6
8	R3	28	B7
9	R4	29	GND
10	R5	30	DCLK
11	R6	31	NC
12	R7	32	Hsync
13	G0	33	Vsync
14	G1	34	DE
15	G2	35	NC
16	G3	36	/RESET
17	G4	37	NC
18	G5	38	NC
19	G6	39	NC
20	G7	40	NC

The non-specified tolerance of dimension is ±0.3mm.

RAYSTAR OPTRONICS

Absolute Maximum Ratings

Item	Symbol	Min	Typ	Max	Unit
Operating Temperature	TOP	-30	—	+85	℃
Storage Temperature	TST	-40	—	+85	℃

Electrical Characteristics

Operating Conditions

Item	Symbol	Min	Typ	Max	Unit
Supply Voltage For LCM	VCC	3.0	3.3	3.6	V
Supply Current For LCM	ICC	—	20	30	mA

LED Driving Conditions

Item	Symbol	Min	Typ	Max	Unit
LED current		-	20	-	mA
Power Consumption		324	384	408	mW
LED voltage	VLED+	16.2	19.2	20.4	V
LED Life Time		50,000	-	-	Hr

RAYSTAR OPTRONICS