# 304YC2E-4CC

**3mm, Super Bright Yellow LEDs**
**Round With Flange Type**

## Technical Data Sheet

### Features:

- Low power consumption.
- General purpose leads.
- Bulk, Available on tape and reel.
- High efficiency.
- Reliable and robust.
- Compliance with EU REACH.
- The product itself will remain within RoHS compliant Version.

### Descriptions:

- The series is specially designed for applications requiring higher brightness.
- The LED lamps are available with different colors, intensities.

### Applications:

- Telephone.
- Computer.
- Circuit board.
- Status indicators.
- Commercial use.

### Device Selection Guide

| Part No. | Emitting Color | Lens Color |
|---|---|---|
| 304YC2E-4CC | Super Bright Yellow | Water Clear |


*Copyright © 2020 Luckylight All Rights Reserved*

## Technical Data Sheet

**Package Dimension:**

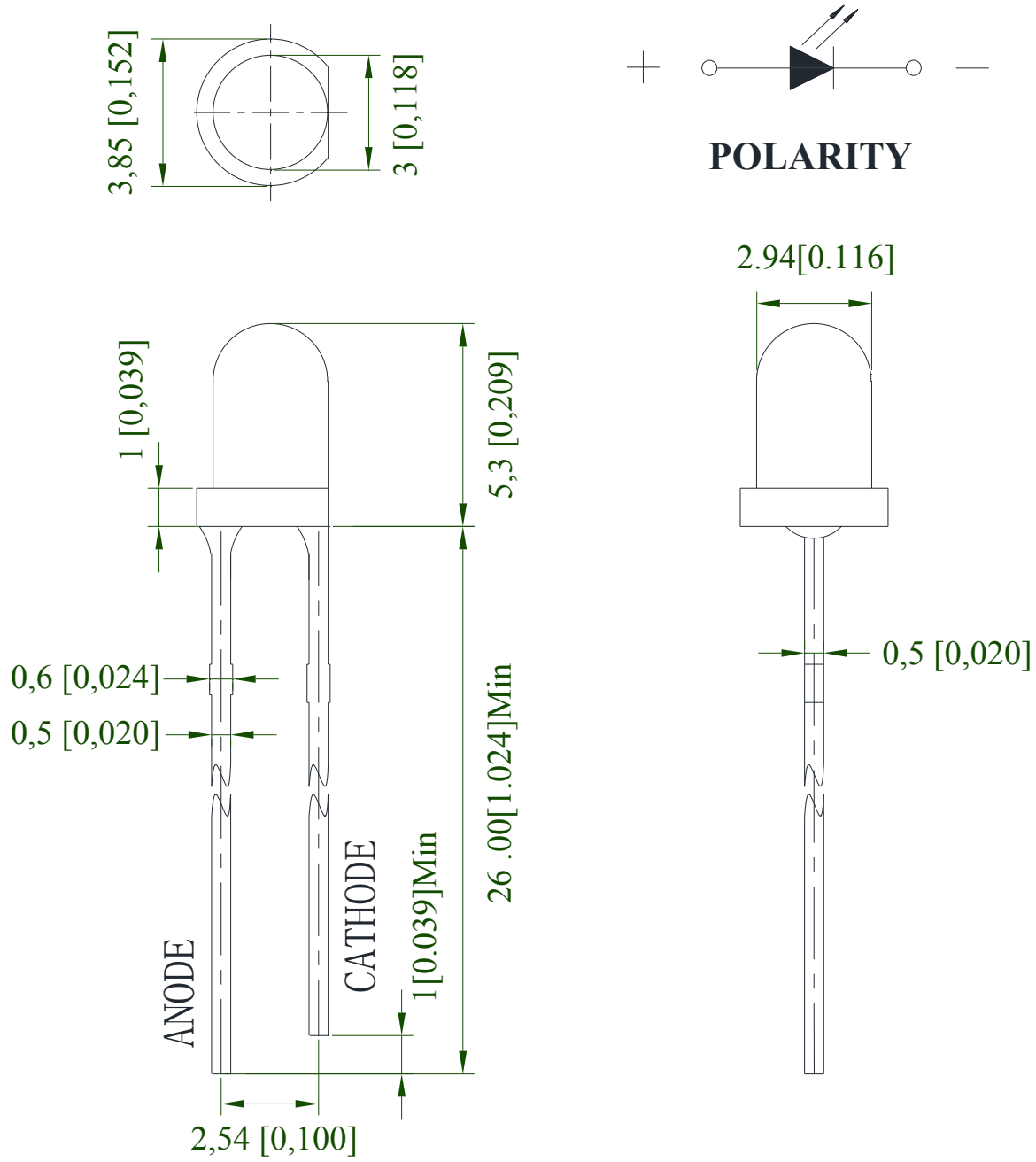


*Notes:*

1. *All dimensions are in millimeters (inches).*
2. *Tolerance is ± 0.25 mm (.010") unless otherwise noted.*
3. *Protruded resin under flange is 1.00mm (.039") max.*


*Copyright © 2020 Luckylight All Rights Reserved*

## Technical Data Sheet

### Absolute Maximum Ratings at Ta=25℃

| Parameters | Symbol | Max. | Unit |
|---|---|---|---|
| Power Dissipation | $P_d$ | 60 | mW |
| Peak Forward Current [a] | $I_{FP}$ | 100 | mA |
| DC Forward Current [b] | $I_F$ | 25 | mA |
| Reverse Voltage | $V_R$ | 5 | V |
| Operating Temperature Range | $T_{opr}$ | -40℃ to +85℃ | |
| Storage Temperature Range | $T_{stg}$ | -40℃ to +85℃ | |
| Soldering Temperature | $T_{sld}$ | 260℃ for 5 Seconds | |

*Notes:*
*a. Duty Factor = 10%, Frequency = 1 kHz.*
*b. Derate linearly as shown in derating curve.*

### *Electrical Optical Characteristics at Ta=25℃*

| Parameters | Symbol | Min. | Typ. | Max. | Unit | Test Condition |
|---|---|---|---|---|---|---|
| Luminous Intensity [a] | Iv | 3800 | 6500 | --- | mcd | IF=20mA |
| Viewing Angle [b] | $2\theta_{1/2}$ | --- | 20 | --- | deg. | IF=20mA |
| Peak Emission Wavelength | λp | --- | 592 | --- | nm | IF=20mA |
| Dominant Wavelength [c] | λd | --- | 590 | --- | nm | IF=20mA |
| Spectral Line Half-Width | △λ | --- | 30 | --- | nm | IF=20mA |
| Forward Voltage | VF | 1.6 | 2.0 | 2.4 | V | IF=20mA |
| Reverse Current | IR | --- | --- | 10 | μA | VR=5V |

*Notes:*
*a. Luminous intensity is measured with a light sensor and filter combination that approximates the CIE eye-response curve. The Iv guarantee must be included with ±15% testing tolerance.*
*b. $2\theta_{1/2}$ is the o-axis angle where the luminous intensity is 1/2 the peak intensity.*
*c. The dominant wavelength (λd) is derived from the CIE chromaticity diagram and represents the single wavelength which defines the color of the device.*


Copyright © 2020 Luckylight All Rights Reserved

## Technical Data Sheet

### Typical Electrical / Optical Characteristics Curves
### (25℃ Ambient Temperature Unless Otherwise Noted)

Spectrum Distribution

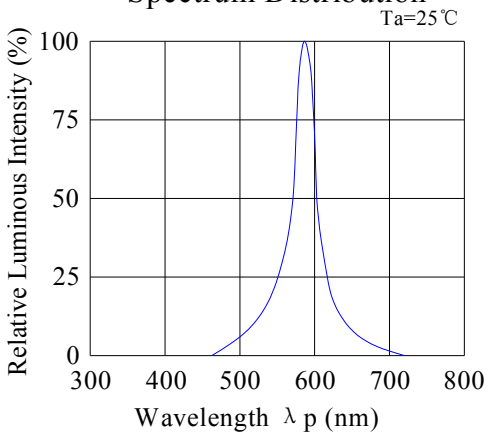


Forward Current & Forward Voltage

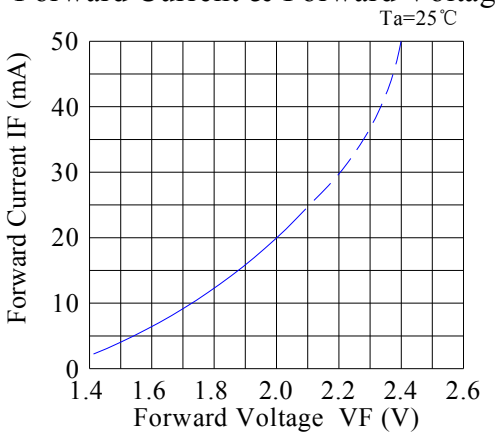


Luminous Intensity & Ambient Temperature

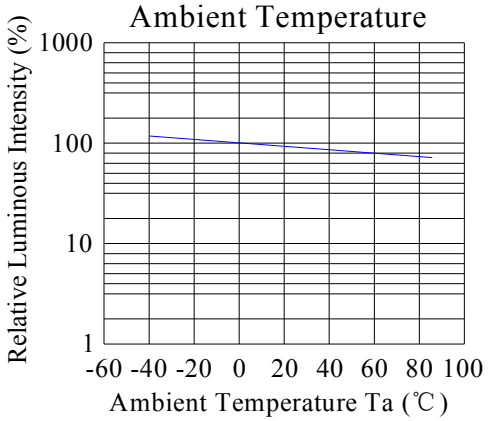


Luminous Intensity & Forward Current

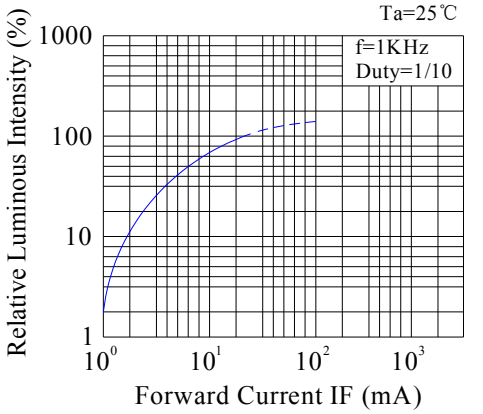


Forward Current Derating Curve

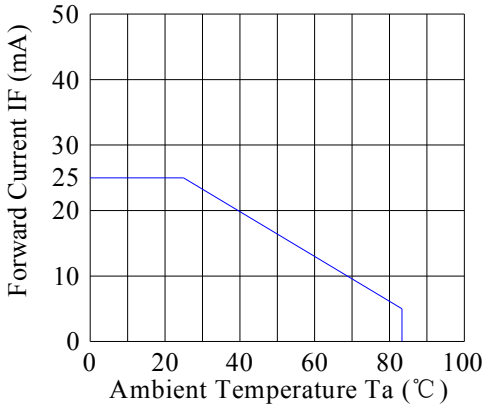


Radiation Diagram

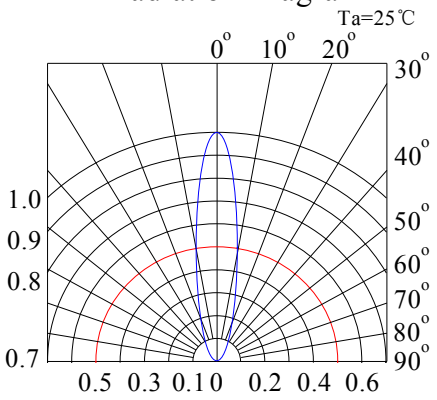



Copyright © 2020 Luckylight All Rights Reserved

## Technical Data Sheet

### Packing & Label Specifications:

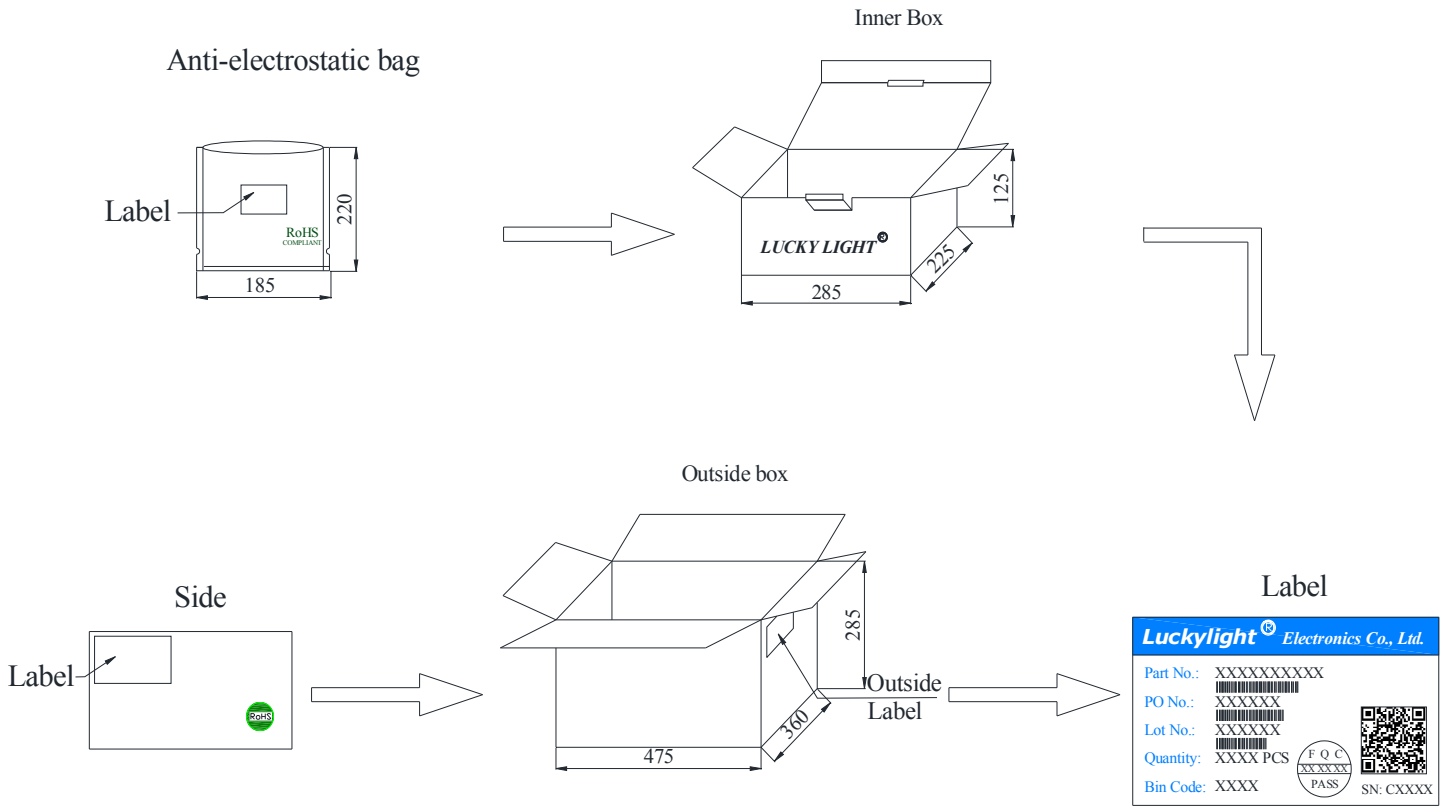


Packing Quantity:

a. 1000 PCS/bag.

b. 12000 PCS/Inner Box.

c. 6 Inner Boxes/Outside Box.


Copyright © 2020 Luckylight All Rights Reserved

### CAUTIONS

1. **Over-current-proof**
   Customer must apply resistors for protection, otherwise slight voltage shift will cause big current change (Burn out will happen).
2. **Storage**

2.1 The LEDs should be stored at 30°C or less and 70%RH or less after being shipped from Luckylight and the storage life limits are 3 months. If the LEDs are stored for 3 months or more, they can be stored for a year in a sealed container with a nitrogen atmosphere and moisture absorbent material.

2.2 Please avoid rapid transitions in ambient temperature, especially, in high humidity environments where condensation can occur.

3. **Cleaning**
   Use alcohol-based cleaning solvents such as isopropyl alcohol to clean the LEDs if necessary.
4. **Lead Forming & Assembly**
   During lead forming, the leads should be bent at a point at least 1.6mm from the base of LED lens. Do not use the base of the lead frame as a fulcrum during forming. Lead forming must be done before soldering, at normal temperature. During assembly on PCB, use minimum clinch force possible to avoid excessive mechanical stress.
5. **Soldering**
   When soldering, for Lamp without stopper type and must be leave a minimum of 3mm clearance from the base of the lens to the soldering point. Do not apply any external stress to the lead frame during soldering while the LED is at high temperature.

   Recommended soldering conditions:

| **Soldering Iron** | | **Wave Soldering** | |
|---|---|---|---|
| Temperature | 300℃ Max. | Pre-heat | 100℃ Max. |
| Soldering Time | 3 sec. Max.<br>(one time only) | Pre-heat Time<br>Solder Wave<br>Soldering Time | 60 sec. Max.<br>260℃ Max.<br>5 sec. Max. |

*Note:*

*a.Excessive soldering temperature and / or time might result in deformation of the LED lens or catastrophic failure of the LED.*


*Copyright © 2020 Luckylight All Rights Reserved*

Recommended Wave Soldering Profiles

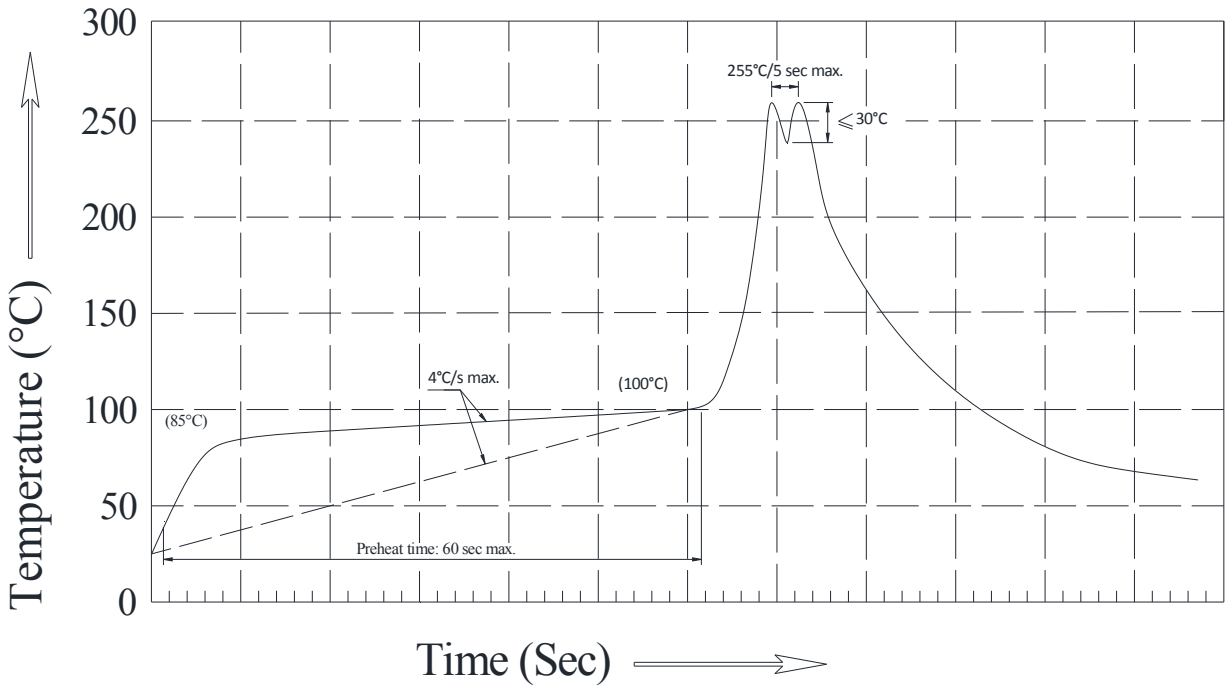


*Notes:*

*a.Recommend pre-heat temperature of 105° C or less (as measured with a thermocouple attached to the LED pins) prior to immersion in the solder wave with a maximum solder bath temperature of 260° C.*
*b.Peak wave soldering temperature between 245° C ~ 255°C for 3 sec (5 sec max).*
*c.Do not apply stress to the epoxy resin while the temperature is above 85°C.*
*d.Fixtures should not incur stress on the component when mounting and during soldering process.*
*e.SAC 305 solder alloy is recommended.*
*f.No more than one wave soldering pass.*

6. **Drive Method**

An LED is a current-operated device. In order to ensure intensity uniformity on multiple LEDs connected in parallel in an application, it is recommended that a current limiting resistor be incorporated in the drive circuit, in series with each LED as shown in Circuit A below.

**Circuit model A**

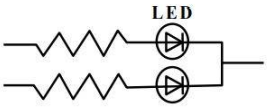


**Circuit model B**

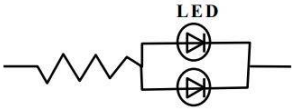


(A) Recommended circuit
(B) The brightness of each LED might appear different due to the differences in the I-V characteristics of those LEDs.


Copyright © 2020 Luckylight All Rights Reserved

7. **Repairing**
   Repair should not be done after the LEDs have been soldered. When repairing is unavoidable, a double-head soldering iron should be used. It should be confirmed beforehand whether the characteristics of the LEDs will or will not be damaged by repairing.
8. **ESD (Electrostatic Discharge)**
   Static Electricity or power surge will damage the LED. Suggestions to prevent ESD damage:
   8.1. Use a conductive wrist band or anti- electrostatic glove when handling these LEDs.
   8.2. All devices, equipment, and machinery must be properly grounded.
   8.3. Work tables, storage racks, etc. should be properly grounded.
   8.4. Use ion blower to neutralize the static charge which might have built up on surface of the LEDs plastic lens as a result of friction between LEDs during storage and handing.

   ESD-damaged LEDs will exhibit abnormal characteristics such as high reverse leakage current, low forward voltage, or “no light up” at low currents.
   To verify for ESD damage, check for “light up” and VF of the suspect LEDs at low currents.
   The VF of “good” LEDs should be >2.0V@0.1mA for InGaN product and >1.4V@0.1mA for AlInGaP product.
9. **Others**
   9.1 The information included in this document reflects representative usage scenarios and is intended for technical reference only.
   9.2 The part number, type, and specifications mentioned in this document are subject to future change and improvement without notice. Before production usage customer should refer to the latest datasheet for the updated specifications.
   9.3 When using the products referenced in this document, please make sure the product is being operated within the environmental and electrical limits specified in the datasheet. If customer usage exceeds the specified limits, Luckylight will not be responsible for any subsequent issues.
   9.4 The LEDs described here are intended to be used for ordinary electronic equipment (such as office equipment, communication equipment and household applications). Consult Luckylight’s Sales in advance for information on applications in which exceptional reliability is required, particularly when the failure or malfunction of the LEDs may directly jeopardize life or health, such as in aviation, transportation, traffic control equipment, medical and life support systems and safety devices.


*Copyright © 2020 Luckylight All Rights Reserved*