finder
RELAYING INNOVATION

Modular step relays 16 A

- Automation for blinds, grilles and shutters
- Living room light control
- Bedroom light control
- Lighting control in corridors (for hotels, offices and hospitals)



20
SERIES

Prices, features, specifications, capabilities, appearance and availability of our products and services are subject to change without notice.
FINDER assumes no responsibility for the presence of possible errors or insufficient information in this document.
In case of discrepancies between the printed and online versions, the latter prevails.

1 or 2 Pole 16 A Step relays for direct 35 mm rail (EN 60715) mounting

- 17.4 mm wide
- Test button with mechanical indicators
- Choice of 7 switching sequences
- AC coils and DC coils
- Identification label
- According to EN 60601-1
  2 x MOPP
- Possible to connect illuminated push-buttons with the additional part 026.00
- 35 mm rail (EN 60715) mount
- Cadmium free contact material

20.21/20.2x/20.23
Box clamp/Screw terminal

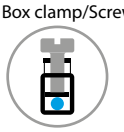

For UL ratings see:
"General technical information" page IX

For outline drawing see page 5

	20.21	20.22, 24, 26, 27, 28	20.23
			
	• Single phase switch 1 NO (SPST-NO) • 35 mm rail (EN 60715) mount	• Double phase switch • 35 mm rail (EN 60715) mount	• Double phase switch 1 NO + 1 NC (SPST-NO + SPST-NC) • 35 mm rail (EN 60715) mount
	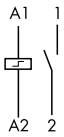	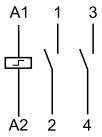	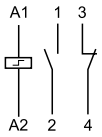
Contact specification			
Contact configuration	1 NO (SPST-NO)	2 NO (DPST-NO)	1 NO + 1 NC (SPST-NO + SPST-NC)
Rated current/Maximum peak current A	16/30	16/30	16/30
Rated voltage/ Maximum switching voltage V AC	250/400	250/400	250/400
Rated load AC1 VA	4000	4000	4000
Rated load AC15 (230 V AC) VA	750	750	750
Nominal lamp rating:			
230 V incandescent/halogen W	2000	2000	2000
fluorescent tubes with electronic ballast W	1000	1000	1000
fluorescent tubes with electromagnetic ballast W	750	750	750
CFL W	400	400	400
230 V LED W	400	400	400
LV halogen or LED with electronic ballast W	400	400	400
LV halogen or LED with electromagnetic ballast W	800	800	800
Minimum switching load mW (V/mA)	1000 (10/10)	1000 (10/10)	1000 (10/10)
Standard contact material	$AgSnO_2$	$AgSnO_2$	$AgSnO_2$
Coil specification			
Nominal voltage (U_N) V AC (50/60 Hz)	8 - 12 - 24 - 48 - 110 - 120 - 230 - 240		
V DC	12 - 24 - 48 - 110	12 - 24 - 48 - 110	12 - 24 - 48 - 110
Rated power AC/DC VA (50 Hz)/W	6.5/5	6.5/5	6.5/5
Operating range AC	(0.85…1.1)U_N (50 Hz)/(0.9…1.1)U_N (60 Hz)		
DC	(0.9…1.1)U_N	(0.9…1.1)U_N	(0.9…1.1)U_N
Technical data			
Mechanical life AC/DC cycles	$300 \cdot 10^3$	$300 \cdot 10^3$	$300 \cdot 10^3$
Electrical life at rated load in AC1 cycles	$100 \cdot 10^3$	$100 \cdot 10^3$	$100 \cdot 10^3$
Minimum/Maximum impulse duration	0.1 s/1 h (according to EN 60669)	0.1 s/1 h (according to EN 60669)	0.1 s/1 h (according to EN 60669)
Insulation between coil and contacts (1.2/50 µs) kV	4	4	4
Ambient temperature range °C	–40…+40	–40…+40	–40…+40
Protection category	IP 20	IP 20	IP 20
Approvals (according to type)			

K

Ordering information

Example: 20 series relay, 35 mm rail (EN 60715) mount, double phase switch, 2 NO 16 A contacts, coil rated at 12 V DC, $AgSnO_2$ contacts.

20	.	22	.	9	.	012	.	4	00	0

Series

Type
2 = 35 mm rail (EN 60715) mount

No. of poles
1 = Single phase switch 1 NO (SPST-NO)
2 = Double phase switch 2 NO (DPST-NO)
3 = Double phase switch 1 NC+ 1 NO (SPST-NO+SPST-NC)
4 = 4 sequence double phase switch 2 NO (DPST-NO)
6 = 3 sequence double phase switch 2 NO (DPST-NO)
7 = 3 sequence double phase switch 2 NO (DPST-NO)
8 = 4 sequence double phase switch 2 NO (DPST-NO)

Coil version
8 = AC (50/60 Hz)
9 = DC

Coil voltage
See coil specifications

Contact material
0 = AgNi
4 = $AgSnO_2$

Technical data

Insulation					
Dielectric strength					
between supply and contacts	V AC	4000			
between open contacts	V AC	2000			
between adjacent contacts	V AC	2000			
Other data					
Power lost to the environment with rated current and coil deenergised	W	1.3 (20.21, 20.23, 20.28)		2.6 (20.22, 20.24, 20.26, 20.27)	
Screw torque	Nm	0.8		0.8	
Max. wire size		**Coil terminals**		**Contact terminals**	
		solid cable	stranded cable	solid cable	stranded cable
	mm^2	1 x 4 / 2 x 2.5	1 x 2.5 / 2 x 2.5	1 x 6 / 2 x 4	1 x 4 / 2 x 2.5
	AWG	1 x 12 / 2 x 14	1 x 14 / 2 x 14	1 x 10 / 2 x 12	1 x 12 / 2 x 14

If the coil is operated for a prolonged period of time, adequate ventilation of the relays must be provided - suggested gap of 9 mm between adjacent relays.

Coil specifications

DC version data

Nominal voltage U_N	Coil code	Operating range U_{min}	Operating range U_{max}	Resistance R	Consumption I at U_N
V		V	V	Ω	mA
12	**9**.012	10.8	13.2	27	440
24	**9**.024	21.6	26.4	105	230
48	**9**.048	43.2	52.8	440	110
110	**9**.110	99	121	2330	47

AC version data

Nominal voltage U_N	Coil code	Operating range U_{min}	Operating range U_{max}	Resistance R	Consumption I at U_N (50 Hz)
V		V	V	Ω	mA
8	**8**.008	6.8	8.8	4	800
12	**8**.012	10.2	13.2	7.5	550
24	**8**.024	20.4	26.4	27	275
48	**8**.048	40.8	52.8	106	150
110	**8**.110	93.5	121	590	64
120	**8**.120	102	132	680	54
230	**8**.230	192	253	2500	28
240	**8**.240	204	264	2700	27.5

Type	Number of steps	Sequence 1	2	3	4
20.21	2				
20.22	2				
20.23	2				
20.24	4				
20.26	3				
20.27	3				
20.28	4				

K

XI-2024, www.findernet.com

Wiring diagrams

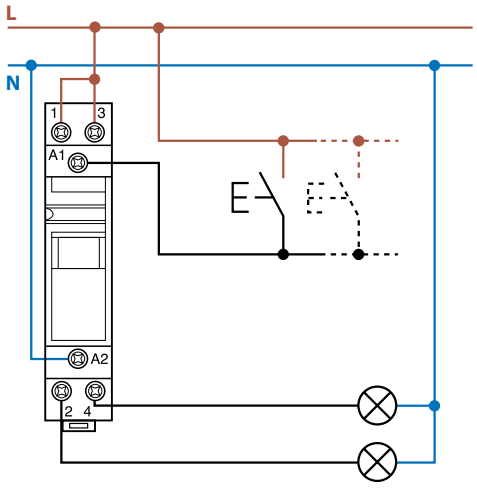

Example: 230 V AC supply voltage.

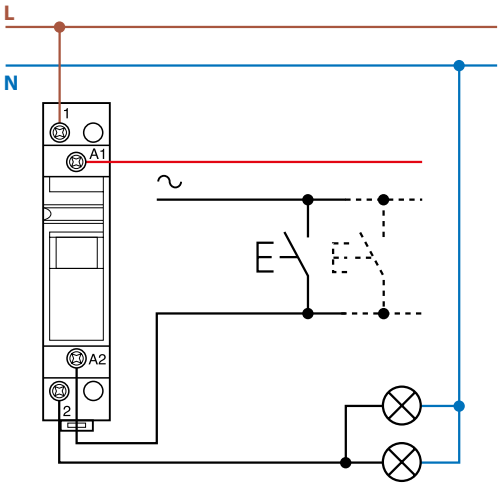

Example: 24 V AC supply voltage.

Outline drawings

Type 20.21
Box clamp/Screw terminal

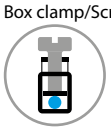

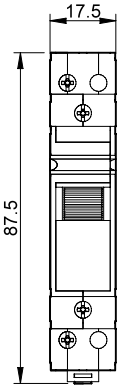

Types 20.22/24/26/27/28
Box clamp/Screw terminal

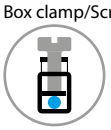

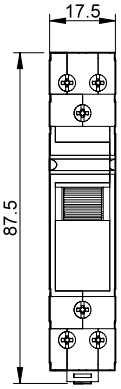

Type 20.23
Box clamp/Screw terminal

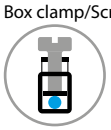

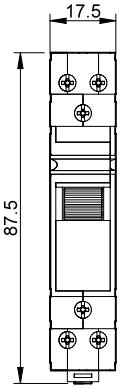

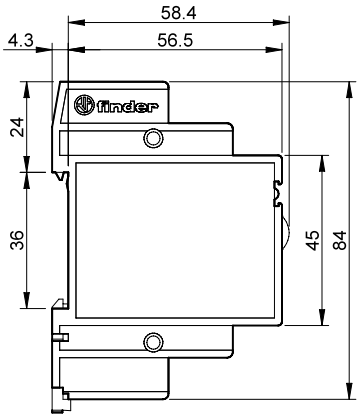

K

Accessories

Module for use with illuminated push-buttons

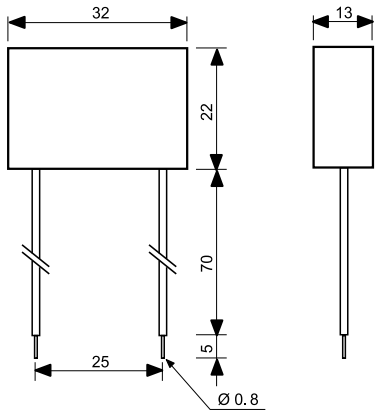

Type 026.00
Sealed construction, 7.5 cm insulated flexible wire termination.

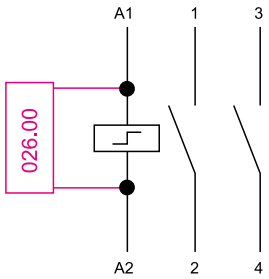

Example of wiring diagram of type 026.00
This module is necessary when using between 1 and a maximum of 15 illuminated push-buttons in the coil circuit (Each 1.5 mA max, 230 V AC). It must be connected in parallel to the coil of the relay.



020.01

Adaptor for panel mounting, 17.5 mm wide	020.01



022.09

Separator for rail mounting, plastic, 9 mm wide	022.09

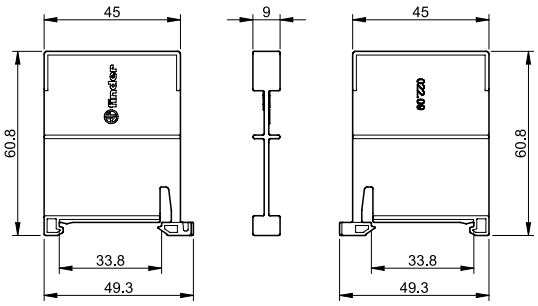

K