BDH 20009

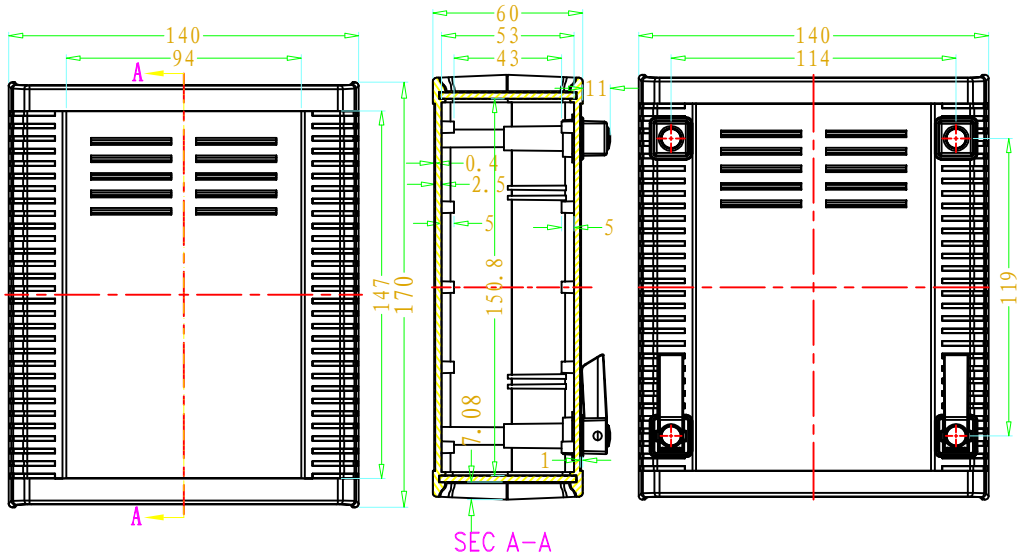

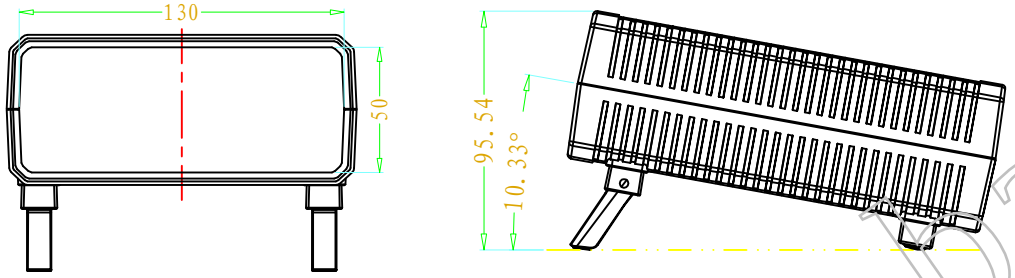

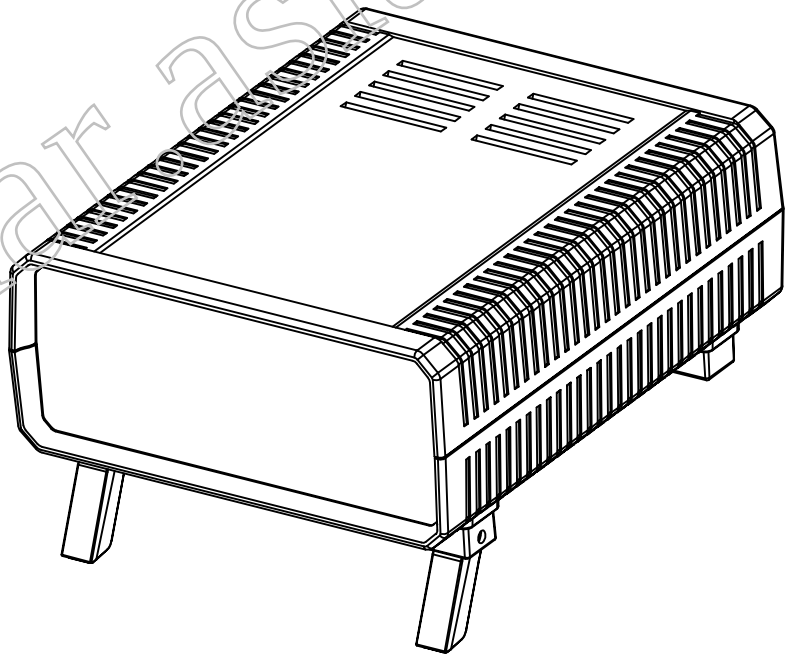

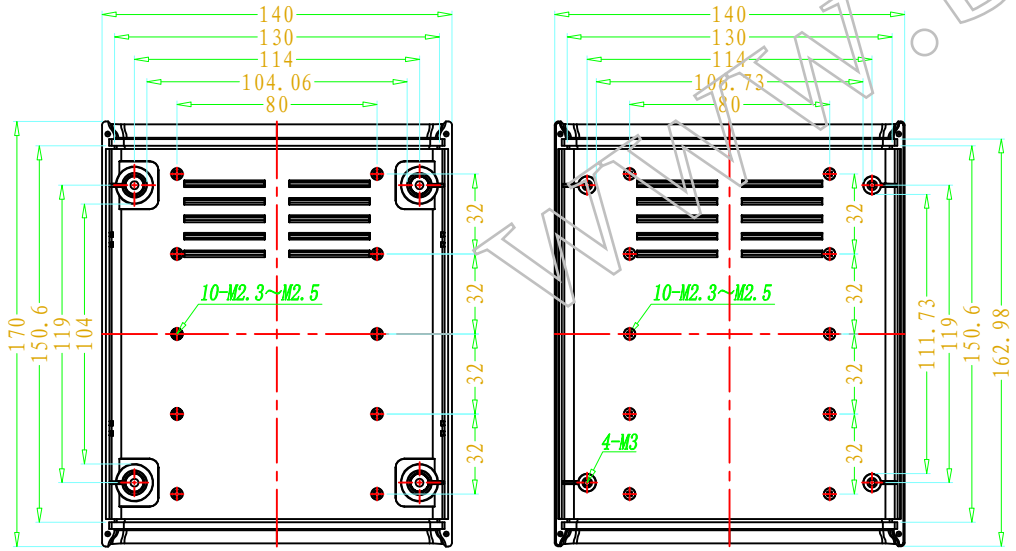

www.Bahar asia

BAHAR
WWW.BAHAR.ASIA

Accessories



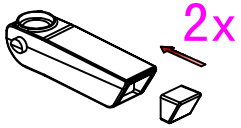

①

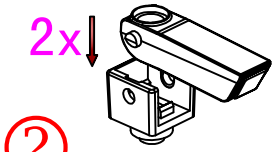

②

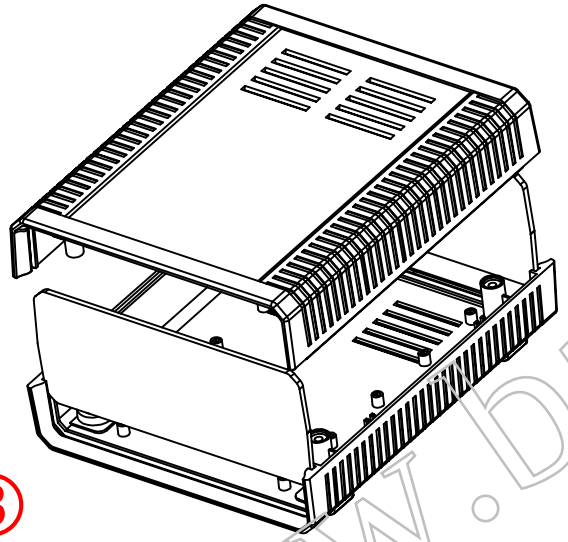

③

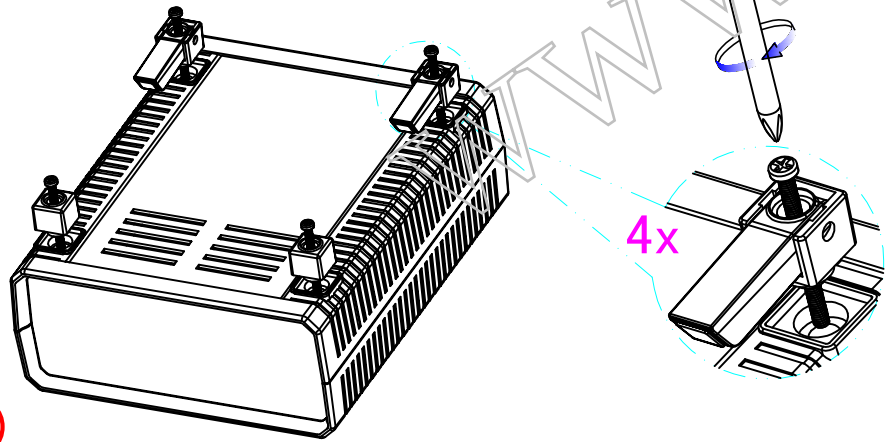

④

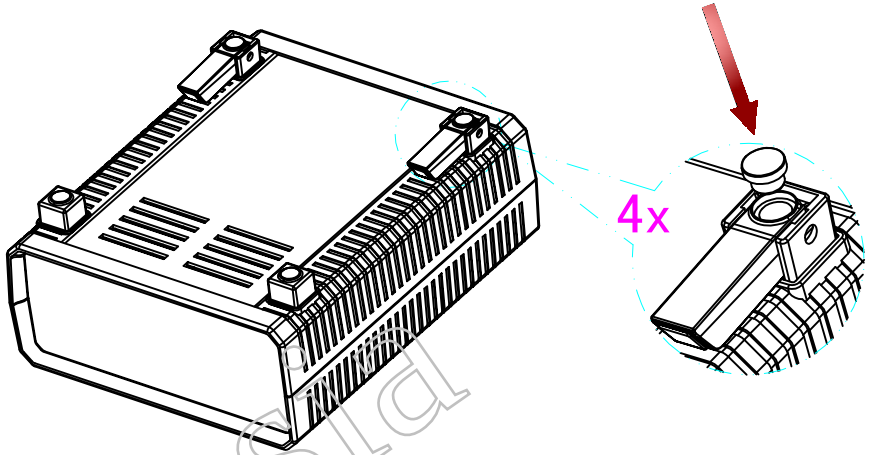

⑤

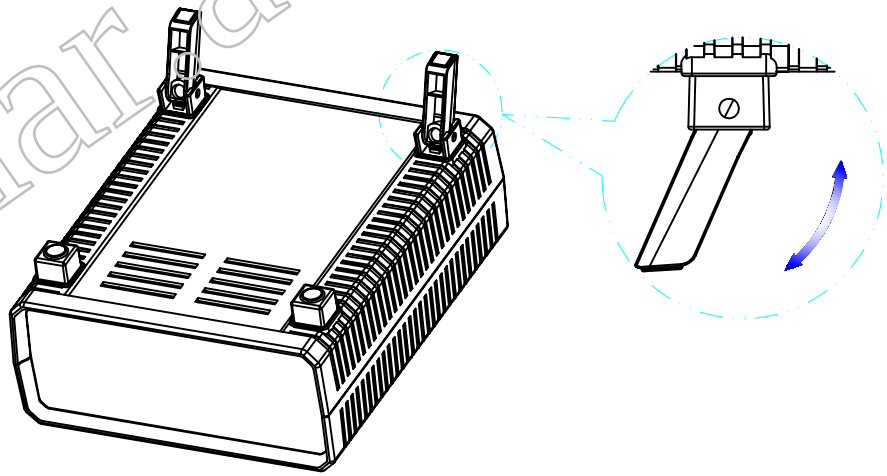

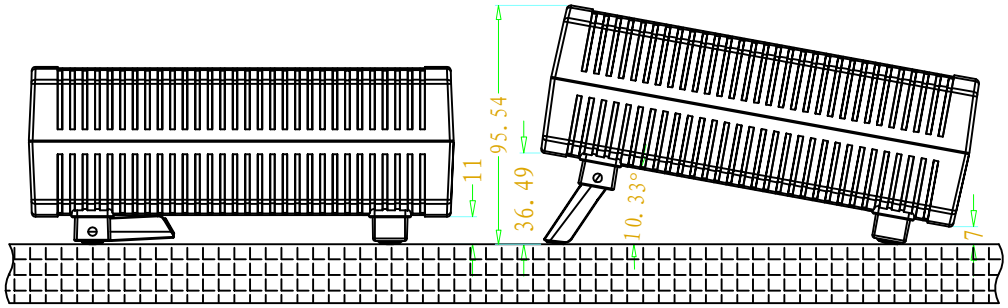

www.baharasia