OLED DISPLAY SPECIFICATION



RAYSTAR Optronics, Inc.
曜凌光電股份有限公司

曜凌光電股份有限公司
Raystar Optronics, Inc.
T: +886-4-2565-0761 | F: +886-4-2565-0760
salescontact@raystar-optronics.com | www.raystar-optronics.com

REX128128D-CTP (Knob)

General Specification

- Module dimension: Ø56.0 x 21.56 mm
- Active area: Ø30.0 mm
- Dot Matrix: 128 x 128
- Pixel size: 0.210 x 0.210 mm
- Pixel pitch: 0.235 x 0.235 mm
- Display Mode：Passive Matrix
- Duty: 1/128 Duty
- Gray Scale: 4 bits
- Display Color: Monochrome
- IC: SSD1327
- Interface: 4-line SPI , I2C
- SIZE:1.18 inch
- CTP IC:FT3268
- Detect Point:1
- CTP Interface:I2C

RAYSTAR OPTRONICS

Interface Pin Function

<table>
<tr><th>No.</th><th>Symbol</th><th>Function</th></tr>
<tr><td>1</td><td>VSS</td><td>Ground pin. It must be connected to external ground.</td></tr>
<tr><td>2</td><td>VCC</td><td>Power supply for panel driving voltage. This is also the most positive power voltage supply pin. It is supplied by external high voltage source.</td></tr>
<tr><td>3</td><td>VCOMH</td><td>COM signal deselected voltage level.
A capacitor should be connected between this pin and VSS. No external power supply is allowed to connect to this pin.</td></tr>
<tr><td>4</td><td>VCI</td><td>Low voltage power supply and power supply for interface logic level. It should match with the MCU interface voltage level and must be connected to external source.
VCI must always set to be equivalent to or higher than VDD.</td></tr>
<tr><td>5</td><td>VDD</td><td>Power supply pin for core logic operation.
VDD can be supplied externally (within the range of 2.4V to 2.6V) or regulated
Internally from VCI. A capacitor should be connected between VDD and VSS under all circumstances.</td></tr>
<tr><td>6</td><td>BS1</td><td>MCU bus interface selection pins. Select appropriate logic setting as described in the following table. BS1 is pin select.
Bus Interface selection
<table>
<tr><th>BS1</th><th>Interface</th></tr>
<tr><td>0</td><td>4-line SPI</td></tr>
<tr><td>1</td><td>I2C</td></tr>
</table></td></tr>
<tr><td>7</td><td>IREF</td><td>This pin is the segment output current reference pin</td></tr>
<tr><td>8</td><td>CS#</td><td>This pin is the chip select input connecting to the MCU.
The chip is enabled for MCU communication only when CS# is pulled LOW (active LOW).</td></tr>
<tr><td>9</td><td>RES#</td><td>This pin is reset signal input.
When the pin is pulled LOW, initialization of the chip is executed.
Keep this pin pull HIGH during normal operation.</td></tr>
<tr><td>10</td><td>DC#</td><td>This pin is Data/Command control pin connecting to the MCU.
When the pin is pulled HIGH, will be interpreted as data.
When the pin is pulled LOW, will be transferred to a command register
In I2C mode, this pin acts as SA0 for slave address selection.</td></tr>
<tr><td>11</td><td>D0</td><td rowspan="3">When serial interface mode is selected, D0 will be the serial clock input: SCLK; D1 will be the serial data input: SDIN and D2 should be kept NC.
When I2C mode is selected, D2, D1 should be tied together and serve as SDAout , SDAin in application and D0 is the serial clock input, SCL.</td></tr>
<tr><td>12</td><td>D1</td></tr>
<tr><td>13</td><td>D2</td></tr>
<tr><td>14</td><td>TP_SCK</td><td>I2C clock signal</td></tr>
<tr><td>15</td><td>TP_SDA</td><td>I2C data signal</td></tr>
<tr><td>16</td><td>TP_INT</td><td>Interrupt signal</td></tr>
<tr><td>17</td><td>VCC</td><td>Power supply for panel driving voltage. This is also the most positive power voltage supply pin.</td></tr>
<tr><td>18</td><td>VSS</td><td>Ground</td></tr>
</table>

RAYSTAR OPTRONICS

Encoder PIN Definition

No.	Symbol	Function
1	FSW_A	Encoder terminal signal-A
2	FSW_B	Encoder terminal signal-B
3	FSW_C	Encoder terminal signal-C
4	FSW_D	Ground

RAYSTAR OPTRONICS

Contour Drawing

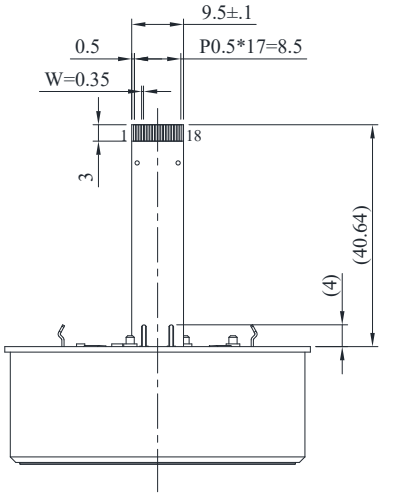

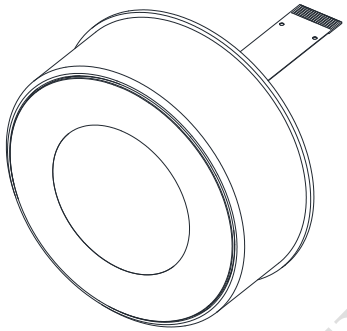

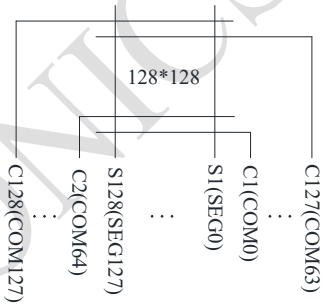

PIN	SYMBOL
1	VSS
2	VCC
3	VCOMH
4	VCI
5	VDD
6	BS1
7	IREF
8	CS#
9	RES#
10	D/C#
11	D0
12	D1
13	D2
14	TP_SCK
15	TP_SDA
16	TP_INT
17	VCC
18	VSS

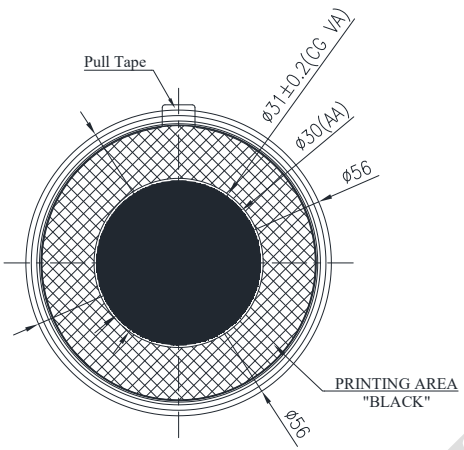

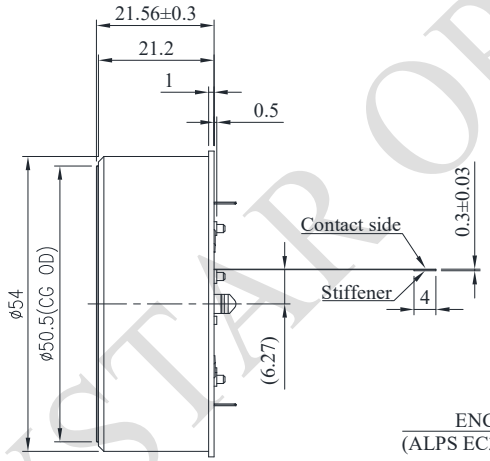

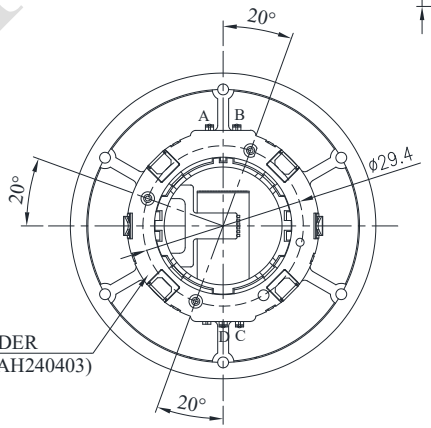

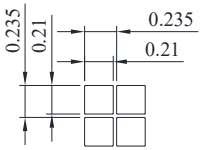

ENCODER	
PIN	SYMBOL
A	FSW_A
B	FSW_B
C	FSW_C
D	FSW_D

The non-specified tolerance of dimension is ±0.3 mm .

Please refer to the 3D diagram of the following website for the installation and fixing method of Encoder:
https://tech.alpsalpine.com/prod/c/html/encoder/ring/ec35ah/ec35ah240403.html

RAYSTAR OPTRONICS

Absolute Maximum Ratings

Parameter	Symbol	Min	Max	Unit
Supply Voltage for Operation	VCI	-0.3	3.6	V
Supply Voltage for Logic	VDD	-0.5	2.75	V
Supply Voltage for Display	VCC	-0.5	19.0	V
Operating Temperature	TOP	-20	+70	°C
Storage Temperature	TSTG	-30	+70	°C

RAYSTAR OPTRONICS

Electrical Characteristics

DC Electrical Characteristics

Item	Symbol	Condition	Min	Typ	Max	Unit
Supply Voltage for Operation	VCI	–	2.8	3.0	3.3	V
Supply Voltage for Display	VCC	–	8.0	14.5	15.0	V
Supply Voltage for Logic	VDD	–	1.65	–	2.6	V
High Level Input	VIH	–	0.8×VCI	–	VCI	V
Low Level Input	VIL	–	0	–	0.2×VCI	V
High Level Output	VOH	Iout = 100uA	0.9×VCI	–	VCI	V
Low Level Output	VOL	Iout = 100uA	0	–	0.1×VCI	V
50% Check Board operating Current		VCC =14.5V	–	15	30	mA

Touch Panel Controller FT3268

Item	Symbol	Condition	Min	Typ	Max	Unit
Input High Volt.	VIH	–	0.7×VDD	–	VDD	V
Input Low Volt.	VIL	–	-0.3	–	0.3×VDD	V
Output High Volt.	VOH	I_{OH} = 0.1mA	0.7×VDD	–	–	V
Output Low Volt.	VOL	I_{OL} = 0.1mA	–	–	0.3×VDD	V

RAYSTAR OPTRONICS