Silicon Pressure Sensor Signal Conditioned, Temperature Compensated and Calibrated

MCP5500 Series

0 to 500 kPa (0 to 72.55 psi)
0.2 to 4.7 V Output

The MCP5500 series piezoresistive transducers are designed for a wide range of applications, but particularly those employing a microcontroller or microprocessor with A/D inputs. This transducer uses advanced micromachining techniques to Provide an accurate, high level analog output signal that is proportional to the applied pressure.

Features

- 2.5% Maximum Error over 0° to 85°C
- Ideally Suited for Microprocessor or Microcontroller-Based Systems
- Durable Epoxy Unibody Element
- Available in Differential and Gauge Configurations

ORDERING INFORMATION							
Device Name	# of Ports			Pressure Type			Device Marking
	None	Single	Dual	Gauge	Differential	Absolute	
Unibody Package (MCP5500 Series)							
MCP5500D	●				●		MCP5500D
MCP5500DP			●		●		MCP5500DP

UNIBODY PACKAGES

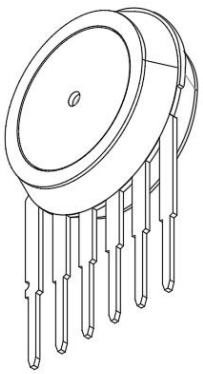

MCP5500D

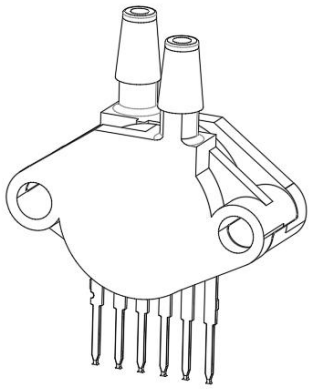

MCP5500DP

Operating Characteristics

Table 1. Operating Characteristics (VS = 5.0 Vdc, TA = 25°C unless otherwise noted, P1 > P2. Decoupling circuit shown in Figure 2 required to meet specification.)

Characteristics	Symbol	Min	Typ	Max	Unit
Pressure Range	P_{OP}	0	—	500	kPa
Supply Voltage(1)	V_S	4.75	5.0	5.25	Vdc
Supply Current	I_O	—	2.5	10	mAdc
Minimum Pressure Offset(2) (0°C to 85°C) @ V_S = 5.0Volts	V_{off}	0.088	0.20	0.313	Vdc
Full Scale Output(3) (0°C to 85°C) @ V_S = 5.0Volts	V_{FSO}	4.587	4.70	4.813	Vdc
Full Scale Span(4) (0°C to 85°C) @ V_S = 5.0Volts	V_{FSS}	—	4.5	—	Vdc
Accuracy(5) (0°C to 85°C)	—	—	—	±2.5	$\%V_{FSS}$
Sensitivity	V/P	—	9.0	—	mV/kPa
Response Time(6)	t_R	—	2.0	—	ms

1. Device is ratiometric within this specified excitation range.
2. Offset (V_{off}) is defined as the output voltage at the minimum rated pressure.
3. Full Scale Output (V_{FSO}) is defined as the output voltage at the maximum or full rated pressure.
4. Full Scale Span (V_{FSS}) is defined as the algebraic difference between the output voltage at full rated pressure and the output voltage at the minimum rated pressure.
5. Accuracy (error budget) consists of the following:
   - Linearity: Output deviation from a straight line relationship with pressure over the specified pressure range.
   - Temperature Hysteresis: Output deviation at any temperature within the operating temperature range, after the temperature is cycled to and from the minimum or maximum operating temperature points, with zero differential pressure applied.
   - Pressure Hysteresis: Output deviation at any pressure within the specified range, when this pressure is cycled to and from the minimum or maximum rated pressure, at 25°C.
   - TcSpan: Output deviation over the temperature range of 0° to 85°C, relative to 25°C.
   - TcOffset: Output deviation with minimum rated pressure applied, over the temperature range of 0° to 85°C, relative to 25°C.
   - Variation from Nominal: The variation from nominal values, for Offset or Full Scale Span, as a percent of V_{FSS}, at 25°C.
6. Response Time is defined as the time for the incremental change in the output to go from 10% to 90% of its final value when subjected to a specified step change in pressure.

Note: Plugged or unplugged with power may cause permanent damage.

Maximum Ratings

Table 2. Maximum Ratings(1)

Rating	Symbol	Value	Unit
Maximum Pressure (P1 > P2)	P_{max}	2000	kPa
Storage Temperature	T_{stg}	–40 to +125	°C
Operating Temperature	T_A	–40 to +125	°C

1. Exposure beyond the specified limits may cause permanent damage or degradation to the device.
2. This sensor is designed for applications where P1 is always greater than, or equal to P2. P2 maximum is 500 kPa.

Figure 1 shows a block diagram of the internal circuitry.

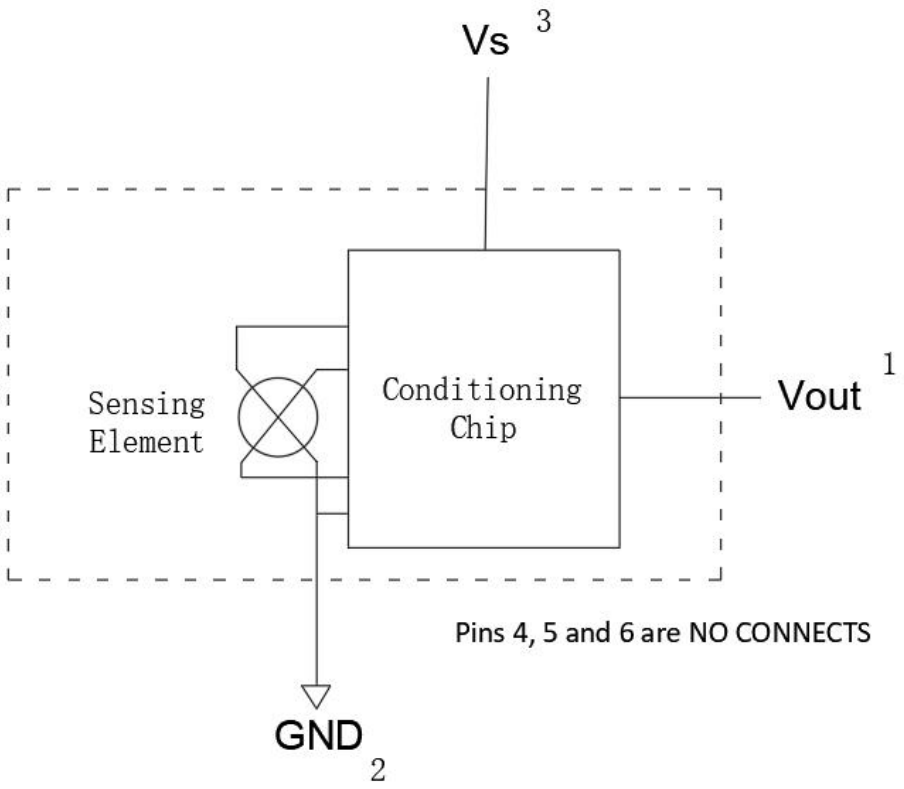

Figure 1. Pressure Sensor Schematic

TEMPERATURE COMPENSATION AND CALIBRATION

A silicone gel isolates the die surface and wire bonds from the environment, while allowing the pressure signal to be transmitted to the sensor diaphragm.

The MCP5500 series pressure sensor operating characteristics, and internal reliability and qualification tests are based on use of dry air as the pressure media. Media, other than dry air, may have adverse effects on sensor performance and long-term reliability. Contact the factory for information regarding media compatibility in your application.

Figure 2 shows the recommended decoupling circuit for interfacing the integrated sensor to the A/D input of a microprocessor or microcontroller. Proper decoupling of the power supply is recommended.

Figure 3 shows the sensor output signal relative to pressure input. Typical, minimum, and maximum output curves are shown for operation over a temperature range of 0° to 85°C using the decoupling circuit shown in Figure 2.

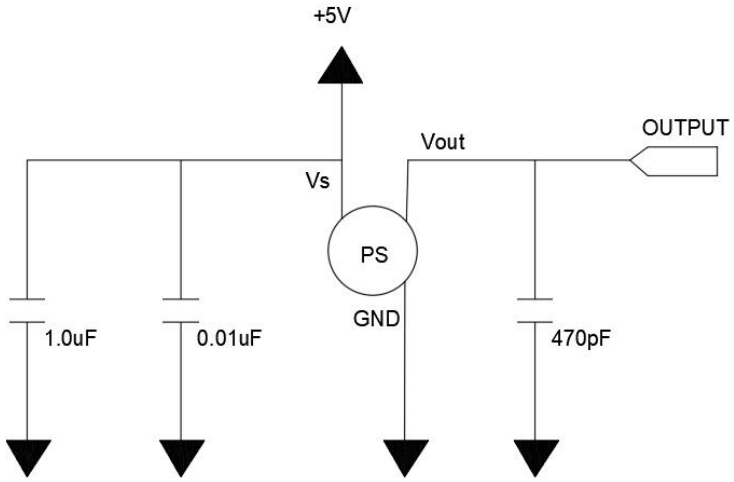

Figure 2. Recommended Power Supply Decoupling and Output Filtering

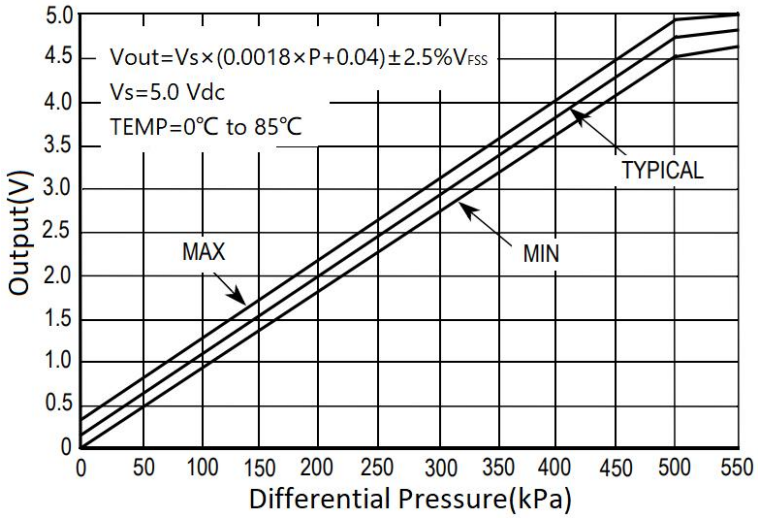

Figure 3. Output vs. Pressure Differential

压力（P1）侧/真空（P2）侧识别表

PRESSURE (P1)/VACUUM (P2) SIDE IDENTIFICATION TABLE

The two sides of the pressure sensor are designated as the Pressure (P1) side and the Vacuum (P2) side. The Pressure (P1) side is the side containing silicone gel which protects the die from harsh media. The MCP pressure sensor is designed to operate with positive differential pressure applied, P1 > P2.
The Pressure (P1) side may be identified by using the table below:

Part Number	Pressure (P1) Side Identifier
MCP5500D	Stainless Steel Cap
MCP5500DP	Side with Part Marking

PACKAGE DIMENSIONS

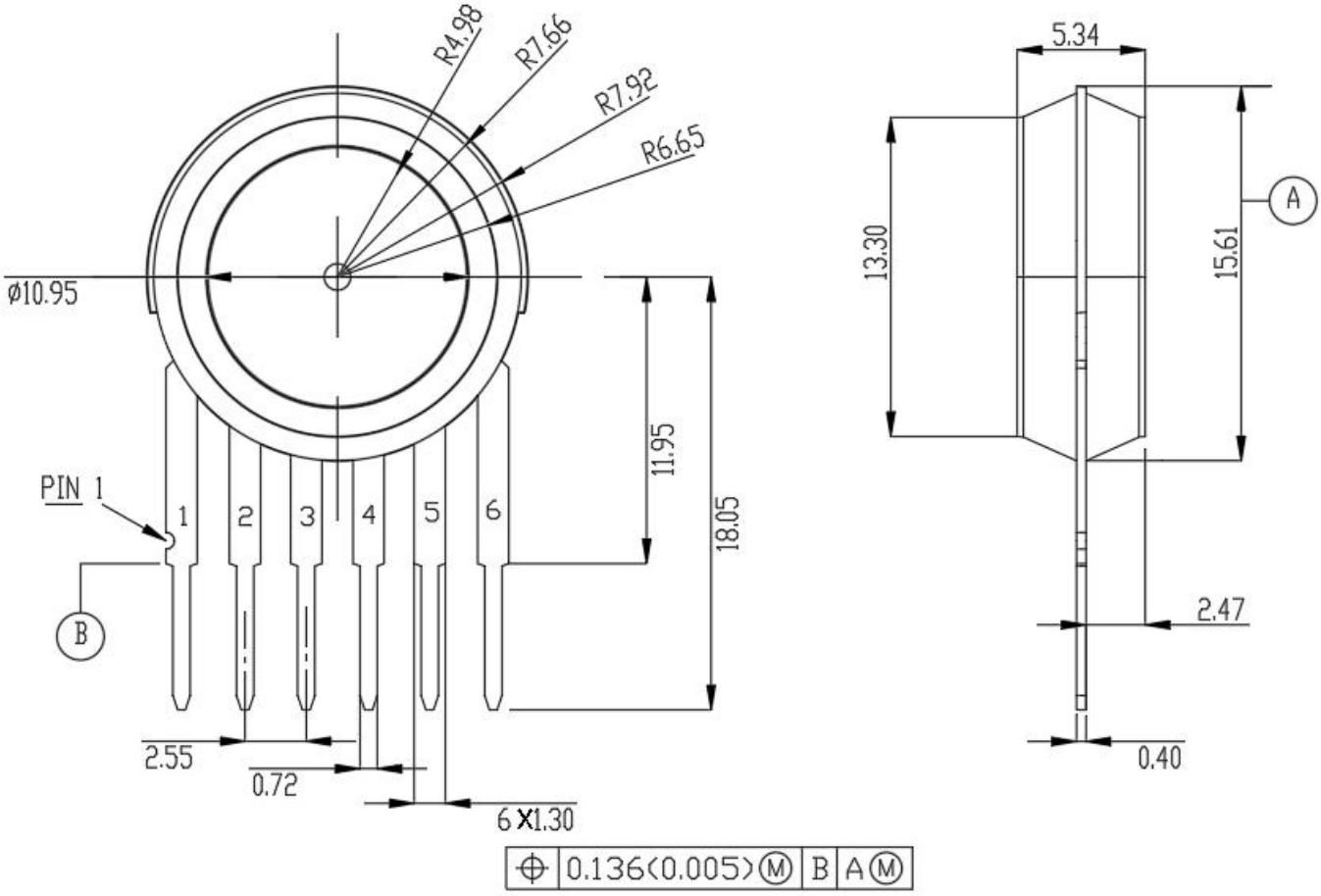

MCP5500D

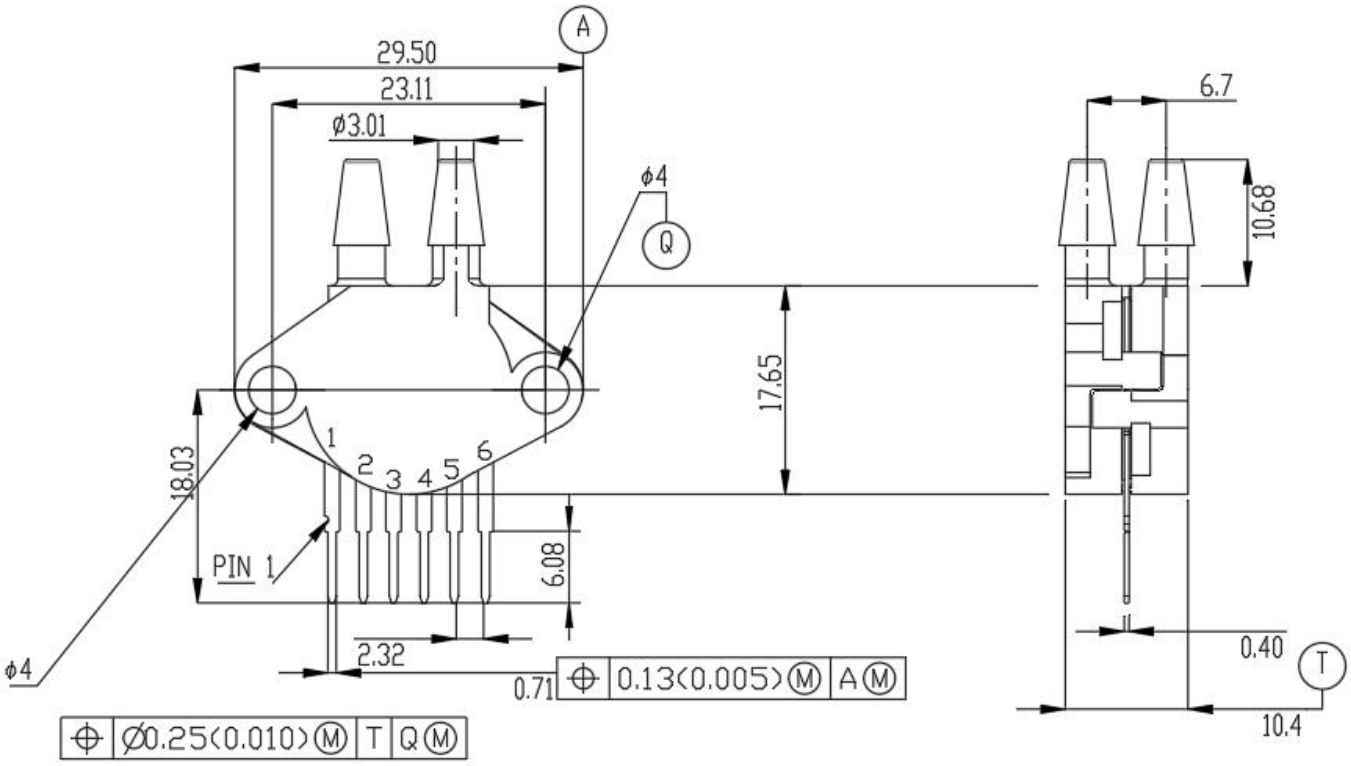
29.50
23.11
ø3.01
A
ϕ4
Q
6.7
10.68
17.65
18.03
1
2
3
4
5
6
PIN 1
6.08
2.32
0.71
0.13(0.005) M A M
ϕ4
Ø0.25(0.010) M T Q M
0.40
T
10.4

MCP5500DP