Silicon Pressure Sensor Signal Conditioned, Temperature Compensated and Calibrated

The MCPV7002 series piezoresistive transducers are designed for a wide range of applications, but particularly those employing a microcontroller or microprocessor with A/D inputs. This transducer uses advanced micromachining techniques to Provide an accurate, high level analog output signal that is Proportional to the applied pressure.

MCPV7002 Series

-2 to 2 kPa (-0.29 to 0.29 psi)
0.5 to 4.5 V Output

Features

- Ideally Suited for Microprocessor or Microcontroller-Based Systems
- Thermoplastic (PPS) Surface Mount Package
- Temperature Compensated over +10° to +60°C
- Available in Differential and Gauge Configurations

Application Examples

- Hospital beds
- HVAC
- Respiratory systems
- Process control

ORDERING INFORMATION							
Device Name	# of Ports			Pressure Type			Device Marking
	None	Single	Dual	Gauge	Differential	Absolute	
Small Outline Package (MCPV7002 Series)							
MCPV7002DP			●		●		MCPV7002DP
MCPV7002GP		●		●			MCPV7002GP
MCPV7002GC6U		●		●			MCPV7002G

SMALL OUTLINE PACKAGES

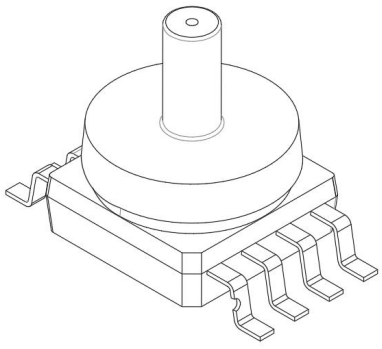

MCPV7002GC6U

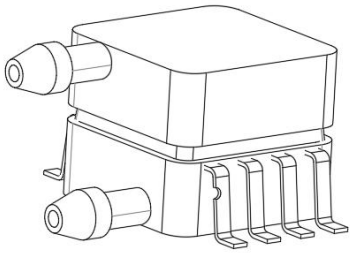

MCPV7002DP

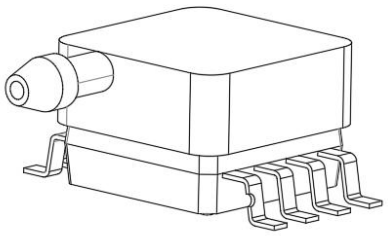

MCPV7002GP

Operating Characteristics

Table 1. Operating Characteristics (VS = 5.0 Vdc, TA = 25°C unless otherwise noted, P1 > P2. Decoupling circuit shown in Figure 2 required to meet specification.)

Characteristics	Symbol	Min	Typ	Max	Unit
Pressure Range	P_{OP}	-2.0	—	2.0	kPa
Supply Voltage(1)	V_S	4.75	5.0	5.25	Vdc
Supply Current	I_O	—	2.5	10	mAdc
Pressure Offset(2) (10°C to 60°C) @ V_S = 5.0Volts	V_{off}	0.25	0.5	0.75	Vdc
Full Scale Output(3) (10°C to 60°C) @ V_S = 5.0Volts	V_{FSO}	4.25	4.5	4.75	Vdc
Full Scale Span(4) (10°C to 60°C) @ V_S = 5.0Volts	V_{FSS}	3.5	4.0	4.5	Vdc
Accuracy(5) (10°C to 60°C)	—	—	—	±6.25	$\%V_{FSS}$
Sensitivity	V/P	—	1.0	—	V/kPa
Response Time(6)	t_R	—	2.0	—	ms

1. Device is ratiometric within this specified excitation range.
2. Offset (V_{off}) is defined as the output voltage at the minimum rated pressure.
3. Full Scale Output (V_{FSO}) is defined as the output voltage at the maximum or full rated pressure.
4. Full Scale Span (V_{FSS}) is defined as the algebraic difference between the output voltage at full rated pressure and the output voltage at the minimum rated pressure.
5. Accuracy (error budget) consists of the following:
   - Linearity: Output deviation from a straight line relationship with pressure over the specified pressure range.
   - Temperature Hysteresis: Output deviation at any temperature within the operating temperature range, after the temperature is cycled to and from the minimum or maximum operating temperature points, with zero differential pressure applied.
   - Pressure Hysteresis: Output deviation at any pressure within the specified range, when this pressure is cycled to and from the minimum or maximum rated pressure, at 25°C.
   - TcSpan: Output deviation over the temperature range of 10° to 60°C, relative to 25°C.
   - TcOffset: Output deviation with minimum rated pressure applied, over the temperature range of 10° to 60°C, relative to 25°C.
   - Variation from Nominal: The variation from nominal values, for Offset or Full Scale Span, as a percent of V_{FSS}, at 25°C.
6. Response Time is defined as the time for the incremental change in the output to go from 10% to 90% of its final value when subjected to a specified step change in pressure.

Note: Plugged or unplugged with power may cause permanent damage.

Maximum Ratings

Table 2. Maximum Ratings(1)

Rating	Symbol	Value	Unit
Maximum Pressure (P1 > P2)	P_{max}	75	kPa
Storage Temperature	T_{stg}	–30 to +100	°C
Operating Temperature	T_A	10 to +60	°C

1. Exposure beyond the specified limits may cause permanent damage or degradation to the device.

Figure 1 shows a block diagram of the internal circuitry.

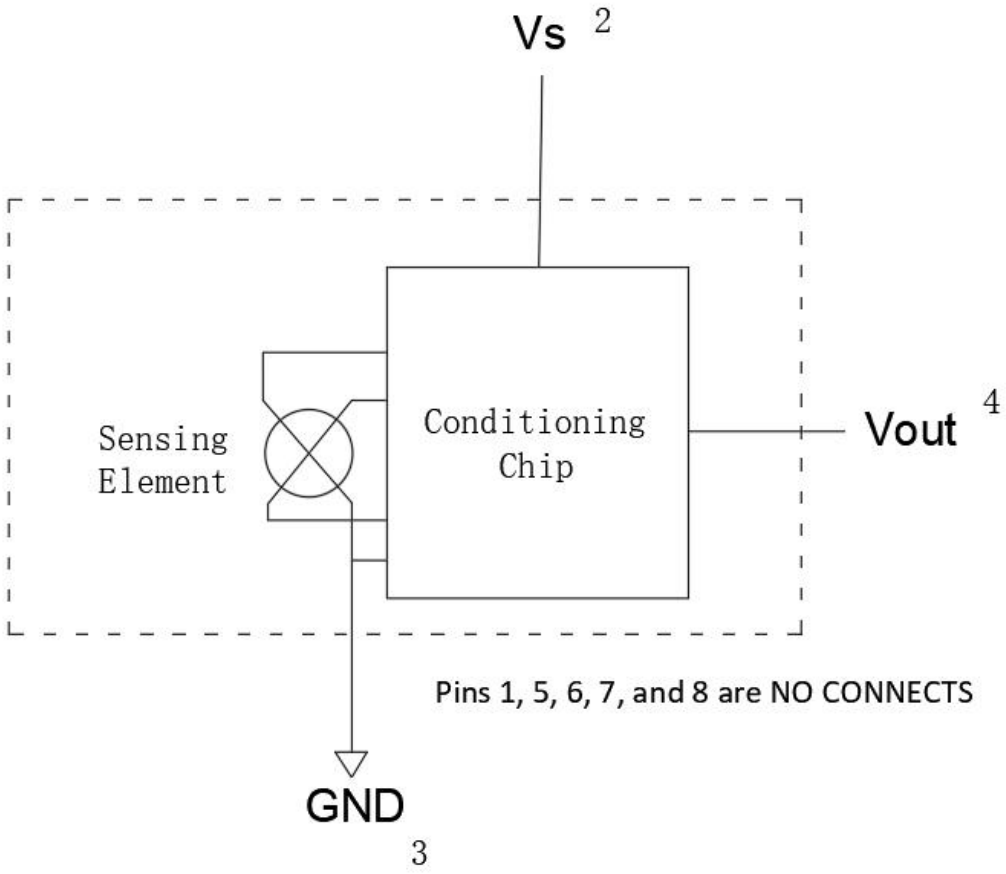

Figure 1. Pressure Sensor Schematic

TEMPERATURE COMPENSATION AND CALIBRATION

The performance over temperature is achieved by temperature compensation, calibration and signal conditioning circuitry.

A silicone gel isolates the die surface and wire bonds from the environment, while allowing the pressure signal to be transmitted to the sensor diaphragm.

The MCPV7002 series pressure sensor operating characteristics, and internal reliability and qualification tests are based on use of dry air as the pressure media. Media, other than dry air, may have adverse effects on sensor performance and long-term reliability. Contact the factory for information regarding media compatibility in your application.

Figure 2 shows the recommended decoupling circuit for interfacing the integrated sensor to the A/D input of a microprocessor or microcontroller. Proper decoupling of the power supply is recommended.

Figure 3 shows the sensor output signal relative to pressure input. Typical, minimum, and maximum output curves are shown for operation over a temperature range of 10° to 60°C using the decoupling circuit shown in Figure 2.

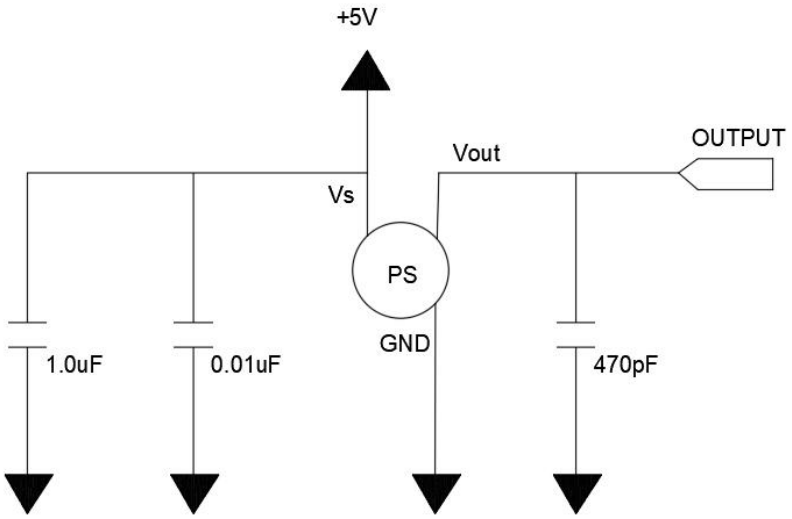

Figure 2. Recommended Power Supply Decoupling and Output Filtering

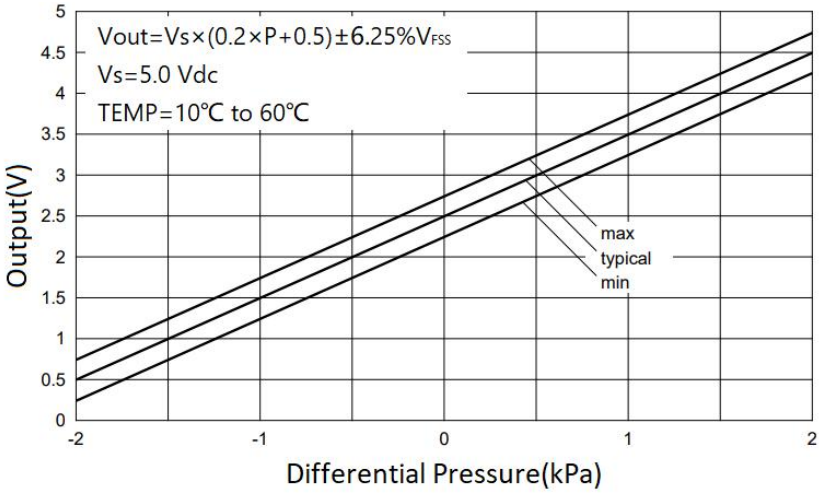

Figure 3. Output vs. Pressure Differential

PRESSURE (P1)/VACUUM (P2) SIDE IDENTIFICATION TABLE

The two sides of the pressure sensor are designated as the Pressure (P1) side and the Vacuum (P2) side. The Pressure (P1) side is the side containing silicone gel which protects the die from harsh media.
The Pressure (P1) side may be identified by using the table below:

Part Number	Pressure (P1) Side Identifier
MCPV7002DP	Side with Part Marking
MCPV7002GP	Side with Port Attached
MCPV7002GC6U	Side with Port Attached

MINIMUM RECOMMENDED FOOTPRINT FOR SURFACE MOUNTED APPLICATIONS

Surface mount board layout is a critical portion of the total design. The footprint for the surface mount packages must be the correct size to ensure proper solder connection interface between the board and the package. With the correct footprint, the packages will self align when subjected to a solder reflow process. It is always recommended to design boards with a solder mask layer to avoid bridging and shorting between solder pads.

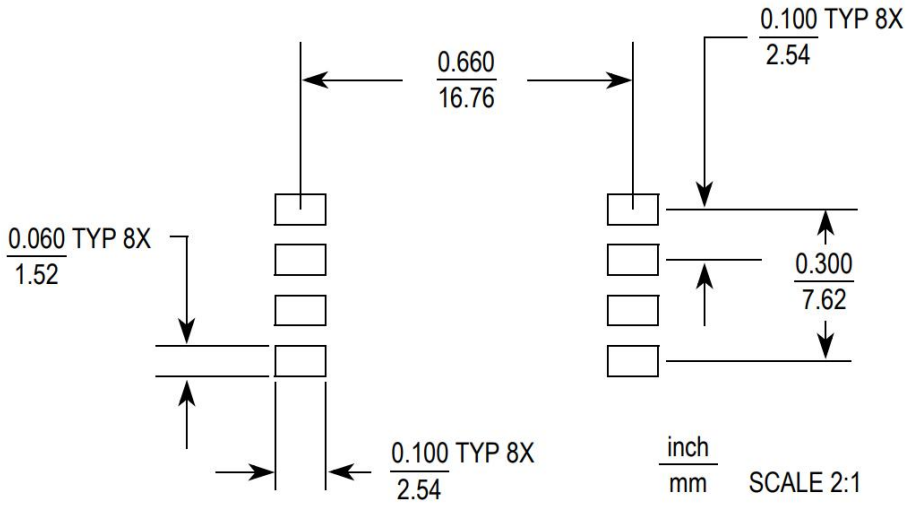

Figure 4. SOP Footprint

PACKAGE DIMENSIONS

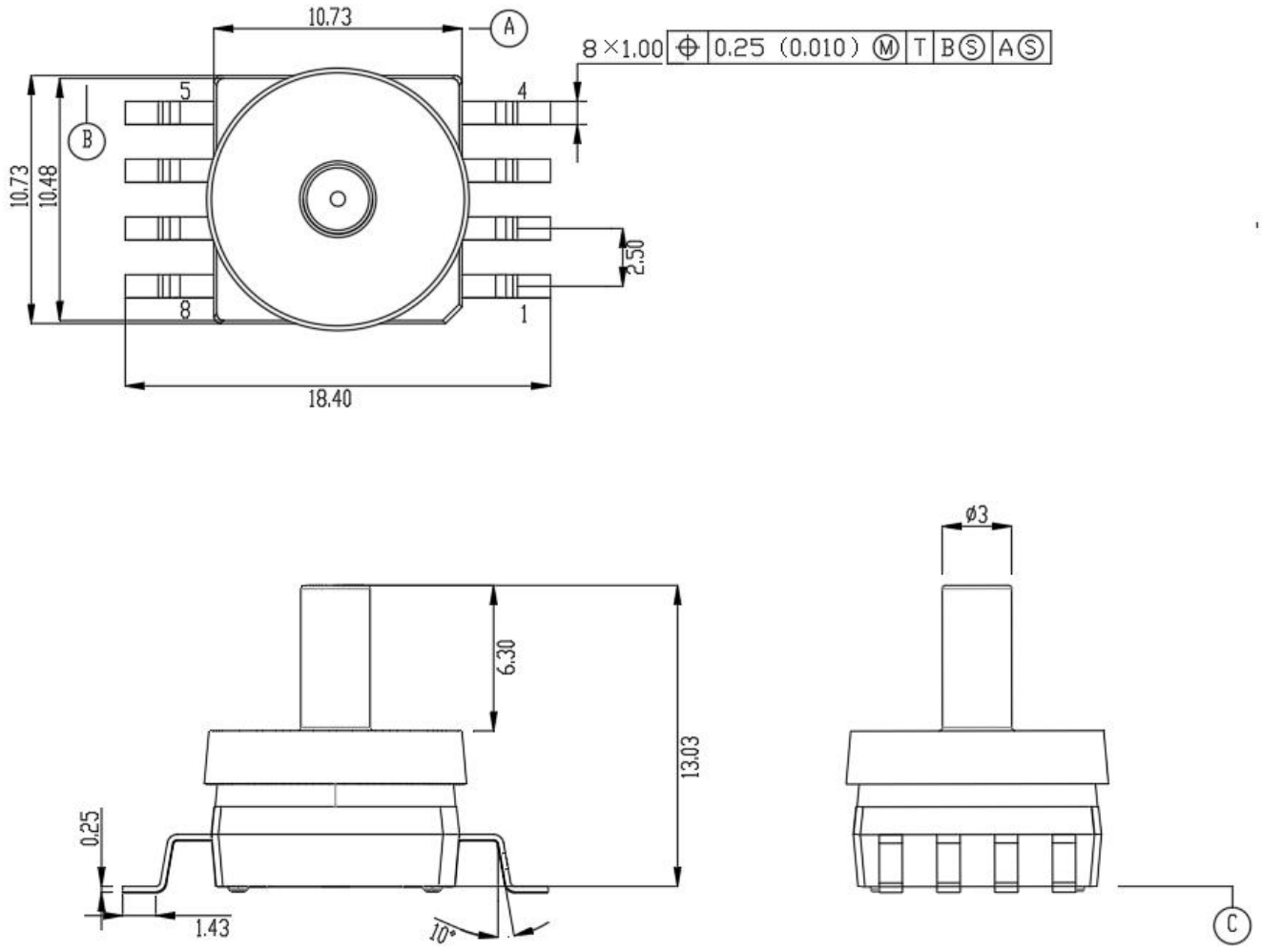

MCPV7002GC6U

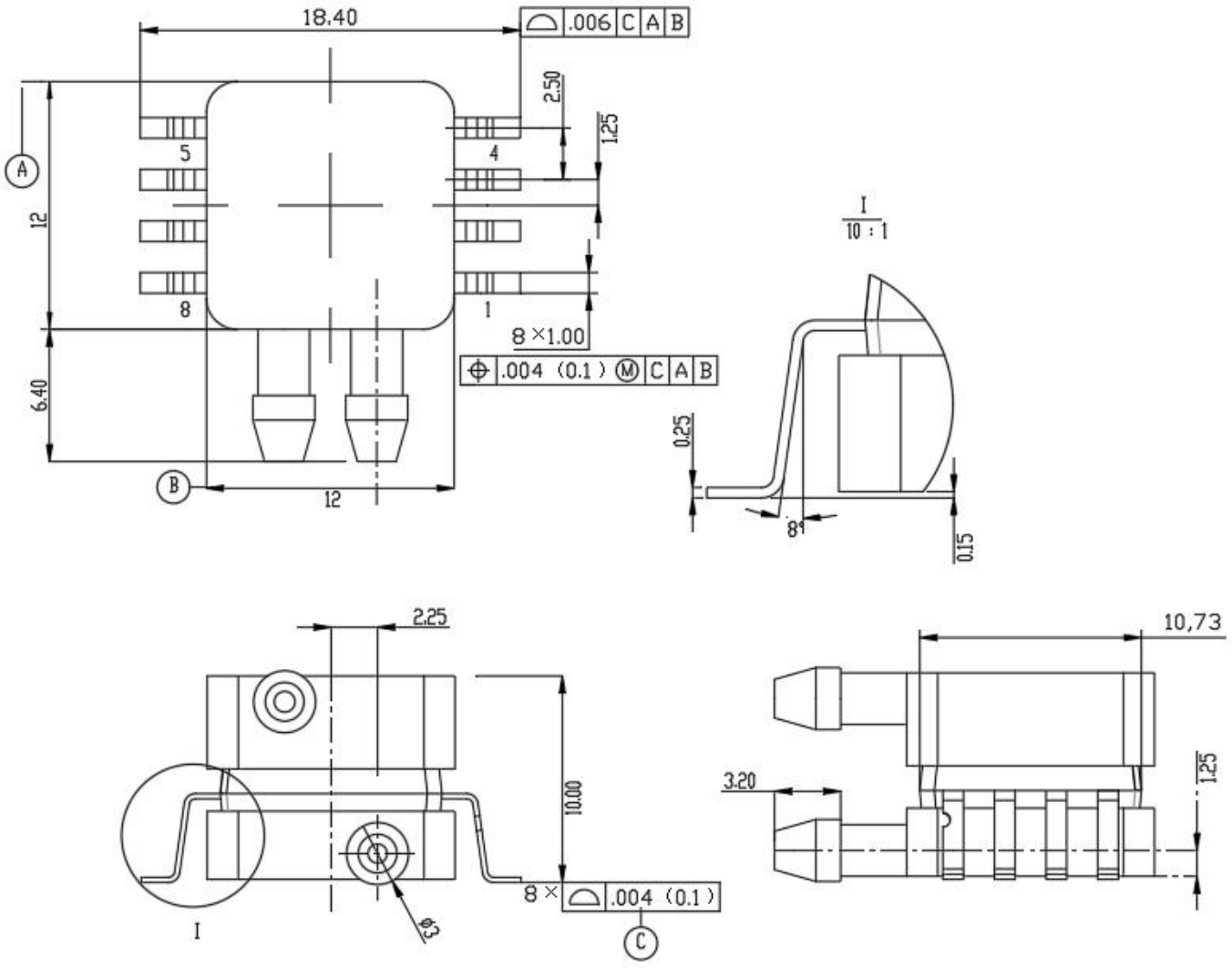
18.40
.006 C A B
2.50
1.25
5
4
8
1
A
12
8 ×1.00
.004 (0.1) M C A B
6.40
B
12
I
10 : 1
0.25
8°
0.15
2.25
10.00
8 × .004 (0.1) C
I
Φ3
10,73
3.20
1.25

MCPV7002DP

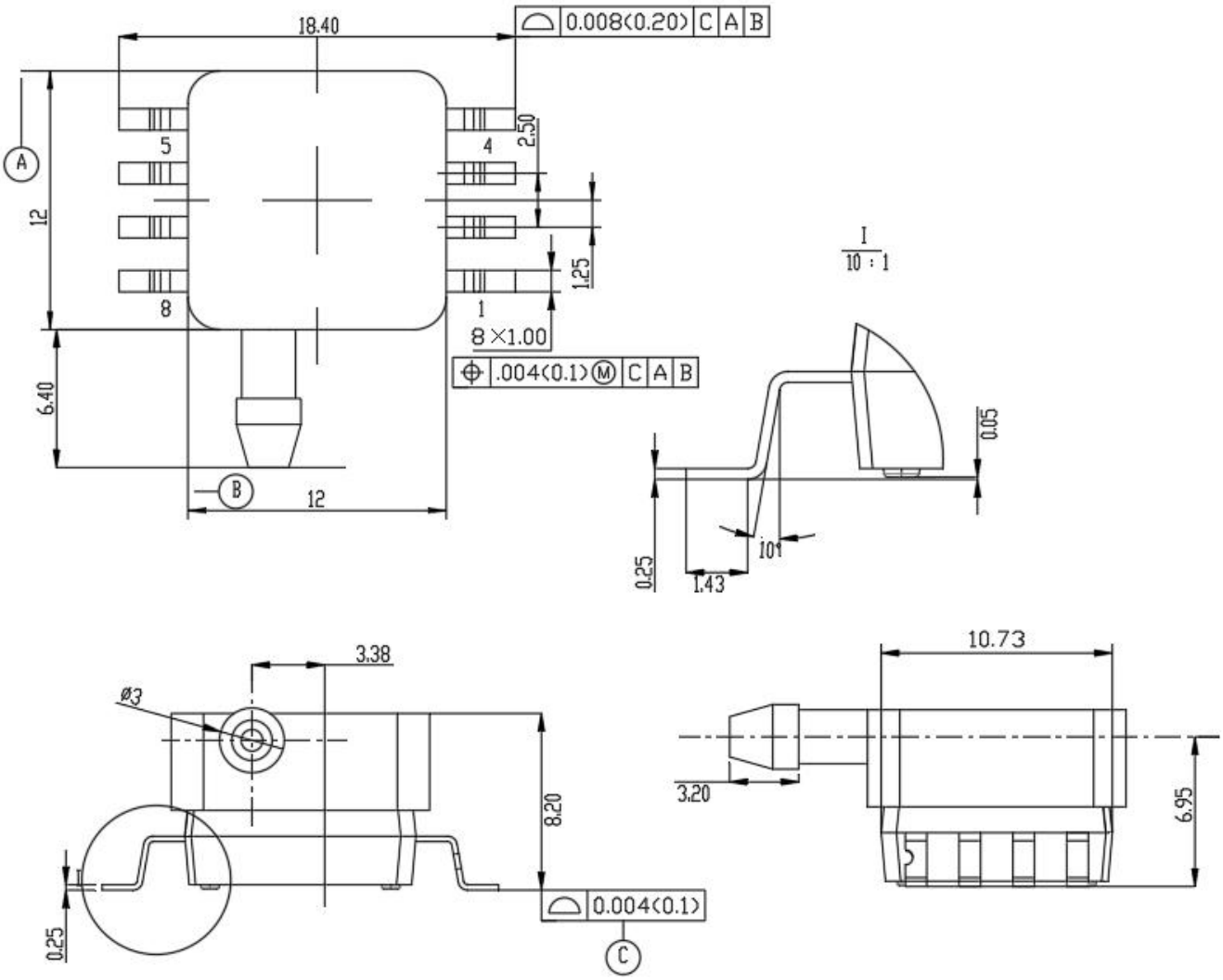
18.40
0.008(0.20) C A B
A
12
5
4
2.50
1.25
8
1
8×1.00
.004(0.1) M C A B
6.40
B
12
I
10 : 1
0.05
0.25
1.43
10°
3.38
Ø3
8.20
0.004(0.1)
C
0.25
10.73
3.20
6.95

MCPV7002GP