Silicon Pressure Sensor Signal Conditioned, Temperature Compensated and Calibrated

The MCPV7025 series piezoresistive transducers are designed for a wide range of applications, but particularly those employing a microcontroller or microprocessor with A/D inputs. This transducer uses advanced micromachining techniques to Provide an accurate, high level analog output signal that is proportional to the applied pressure.

MCPV7025 Series

-25 to 25 kPa (-3.6 to 3.6 psi)
0.25 to 4.75 V Output

Features

- 5.0% Maximum Error over 0° to 85°C
- Ideally Suited for Microprocessor or Microcontroller-Based Systems
- Thermoplastic (PPS) Surface Mount Package
- Temperature Compensated over -40° to +125°C
- Available in Differential and Gauge Configurations

Application Examples

- Respiratory Systems
- Process Control
- Patient Monitoring
- Remote Monitoring Devices

ORDERING INFORMATION

Device Name	# of Ports			Pressure Type			Device Marking
	None	Single	Dual	Gauge	Differential	Absolute	
MCPV7025GC6U		●		●			MCPV7025G
MCPV7025GP		●		●			MCPV7025GP
MCPV7025DP			●		●		MCPV7025DP

SMALL OUTLINE PACKAGES

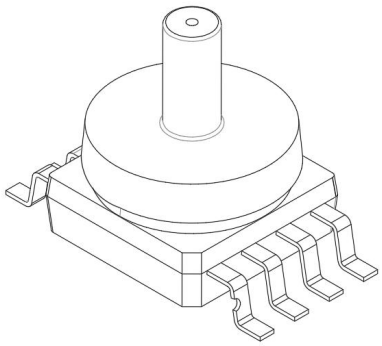

MCPV7025GC6U

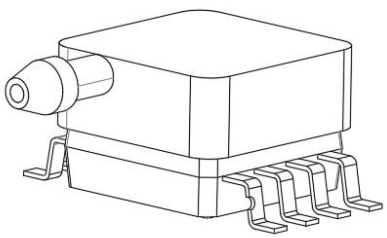

MCPV7025GP

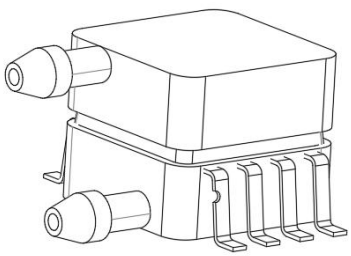

MCPV7025DP

Operating Characteristics

Table 1. Operating Characteristics (VS = 5.0 Vdc, TA = 25°C unless otherwise noted, P1 > P2. Decoupling circuit shown in Figure 2 required to meet specification.)

Characteristics	Symbol	Min	Typ	Max	Unit
Pressure Range (1)	P_{OP}	-25	—	25	kPa
Supply Voltage(2)	V_S	4.75	5.0	5.25	Vdc
Supply Current	I_o	—	2.5	10	mAdc
Minimum Pressure Offset(3) (0°C to 85°C) @ V_S = 5.0Volts	V_{off}	0.116	0.25	0.384	Vdc
Full Scale Output(4) (0°C to 85°C) @ V_S = 5.0Volts	V_{FSO}	4.610	4.75	4.890	Vdc
Full Scale Span(5) (0°C to 85°C) @ V_S = 5.0Volts	V_{FSS}	—	4.5	—	Vdc
Accuracy (0°C to 85°C)	—	—	—	±5.0	$\%V_{FSS}$
Sensitivity	V/P	—	90	—	mV/kPa
Response Time(6)	t_R	—	2.0	—	ms

1. 1.0 kPa (kiloPascal) equals 0.145 psi.
2. Device is ratiometric within this specified excitation range.
3. Offset (V_{off}) is defined as the output voltage at the minimum rated pressure.
4. Full Scale Output (V_{FSO}) is defined as the output voltage at the maximum or full rated pressure.
5. Full Scale Span (V_{FSS}) is defined as the algebraic difference between the output voltage at full rated pressure and the output voltage at the minimum rated pressure.
6. Response Time is defined as the time for the incremental change in the output to go from 10% to 90% of its final value when subjected to a specified step change in pressure.

Note: Plugged or unplugged with power may cause permanent damage.

Maximum Ratings

Table 2. Maximum Ratings(1)

Rating	Symbol	Value	Unit
Maximum Pressure (P1 > P2)	P_{max}	200	kPa
Storage Temperature	T_{stg}	–40 to +125	°C
Operating Temperature	T_A	–40 to +125	°C

1. Exposure beyond the specified limits may cause permanent damage or degradation to the device.

Figure 1 shows a block diagram of the internal circuitry.

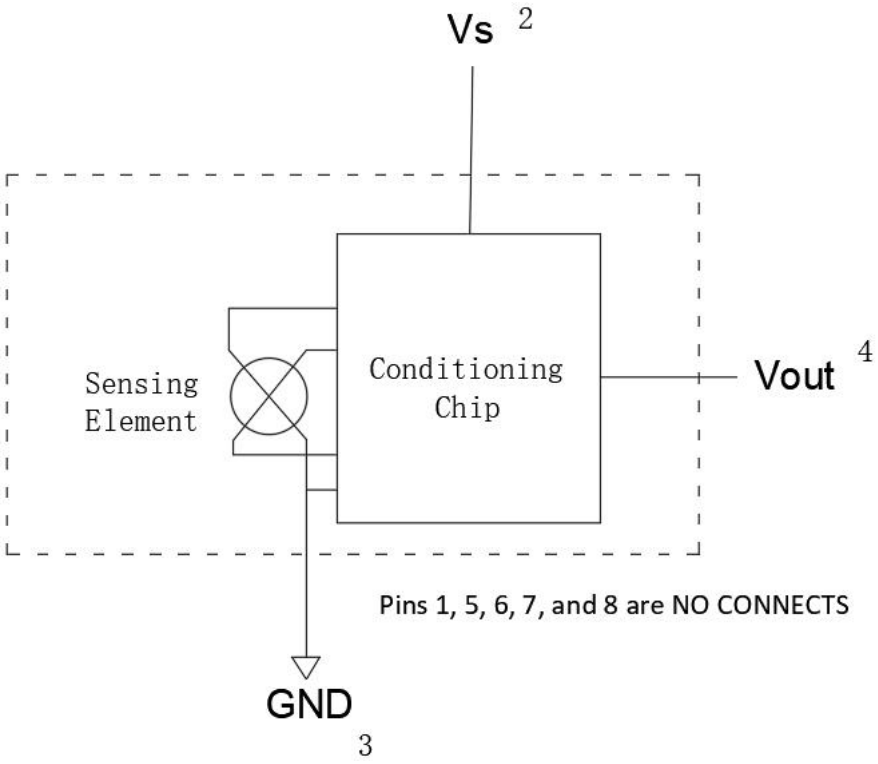

Figure 1. Pressure Sensor Schematic

TEMPERATURE COMPENSATION AND CALIBRATION

The MCPV7025 series pressure sensor operating characteristics, and internal reliability and qualification tests are based on use of dry air as the pressure media. Media, other than dry air, may have adverse effects on sensor performance and long-term reliability. Contact the factory for information regarding media compatibility in your application.

Figure 2 shows the sensor output signal relative to pressure input. Typical, minimum, and maximum output curves are shown for operation over a temperature range of 0° to 85°C using the decoupling circuit shown in Figure 3.

Figure 3 shows the recommended decoupling circuit for interfacing the integrated sensor to the A/D input of a microprocessor or microcontroller. Proper decoupling of the power supply is recommended.

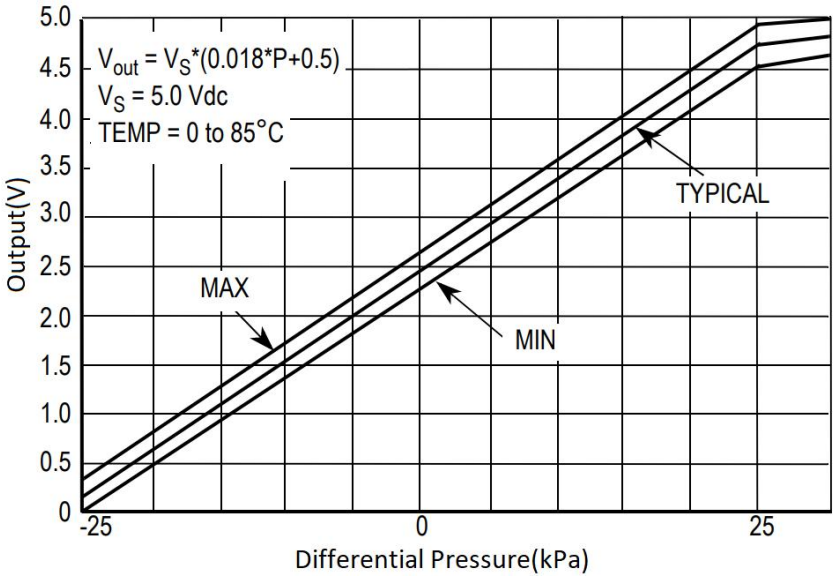

Figure2. Output vs. Pressure Differential

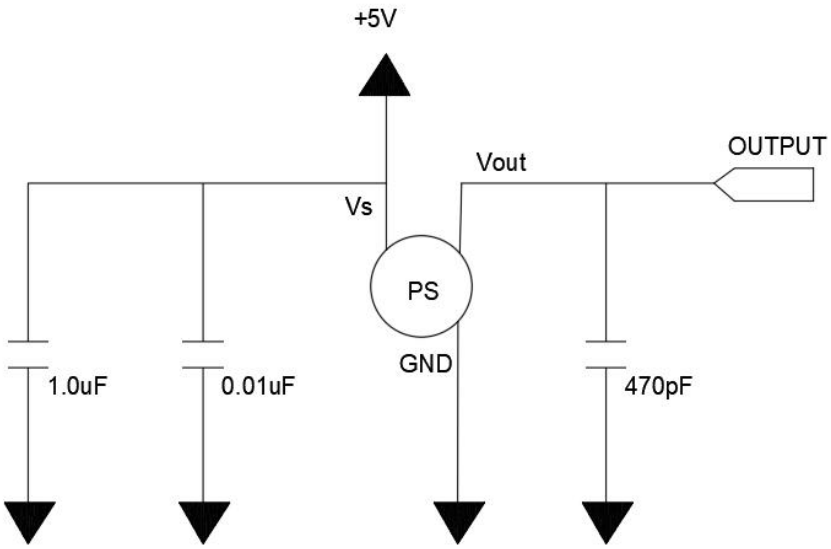

Figure 3. Recommended Power Supply Decoupling and Output Filtering

PRESSURE (P1)/VACUUM (P2) SIDE IDENTIFICATION TABLE

The two sides of the pressure sensor are designated as the Pressure (P1) side and the Vacuum (P2) side. The Pressure (P1) side is the side containing silicone gel which protects the die from harsh media. The MCP pressure sensor is designed to operate with positive differential pressure applied, P1 > P2.
The Pressure (P1) side may be identified by using the table below:

Part Number	Pressure (P1) Side Identifier
MCPV7025GC6U	Side with Port Attached
MCPV7025GP	Side with Port Attached
MCPV7025DP	Side with Part Marking

MINIMUM RECOMMENDED FOOTPRINT FOR SURFACE MOUNTED APPLICATIONS

Surface mount board layout is a critical portion of the total design. The footprint for the surface mount packages must be the correct size to ensure proper solder connection interface between the board and the package. With the correct footprint, the packages will self align when subjected to a solder reflow process. It is always recommended to design boards with a solder mask layer to avoid bridging and shorting between solder pads.

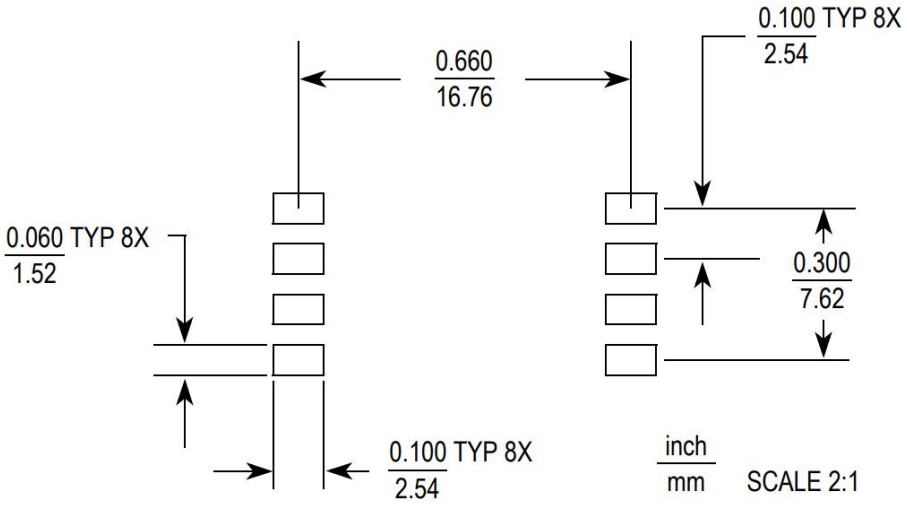

Figure 4. SOP Footprint

PACKAGE DIMENSIONS

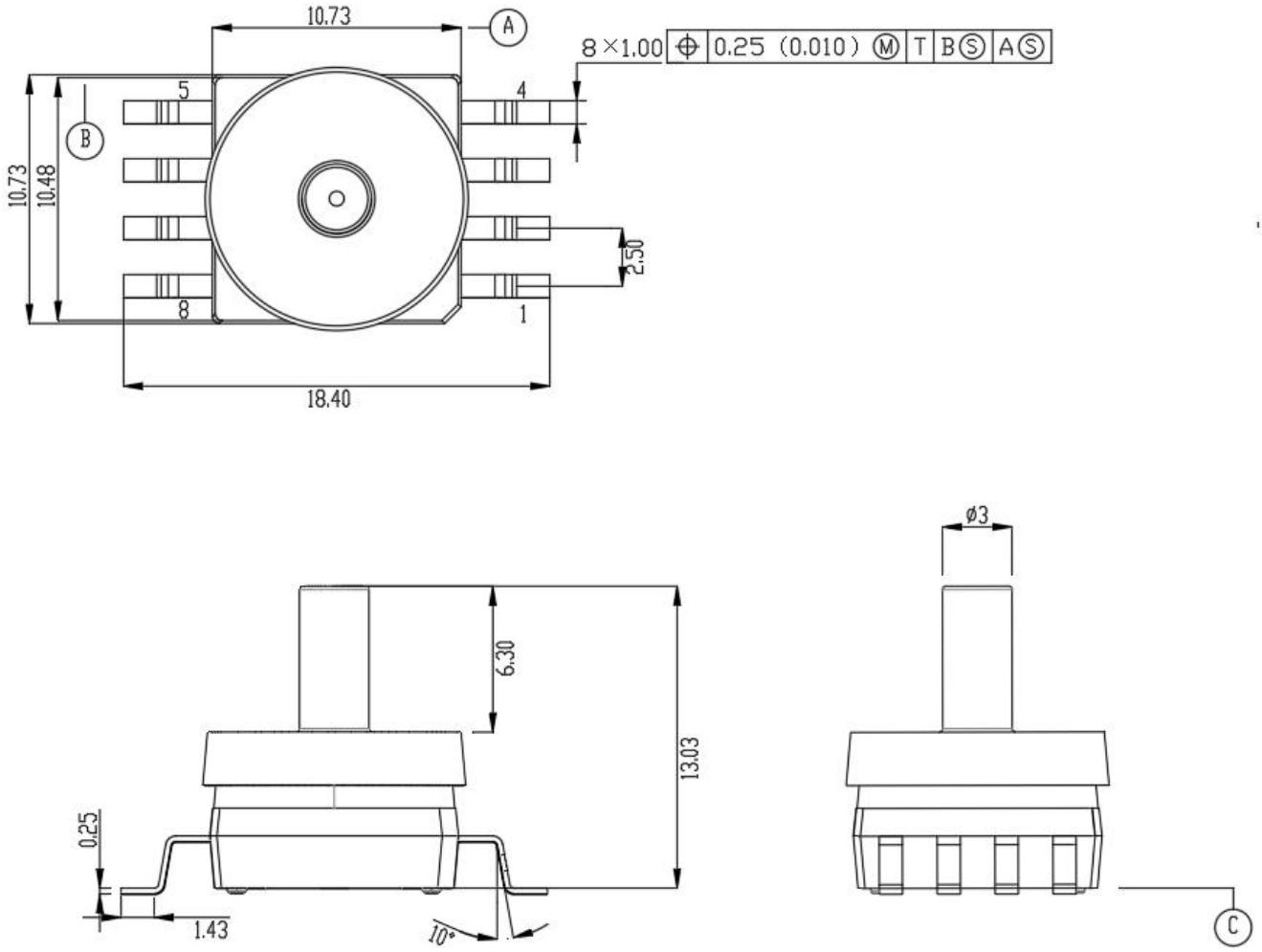

MCPV7025GC6U

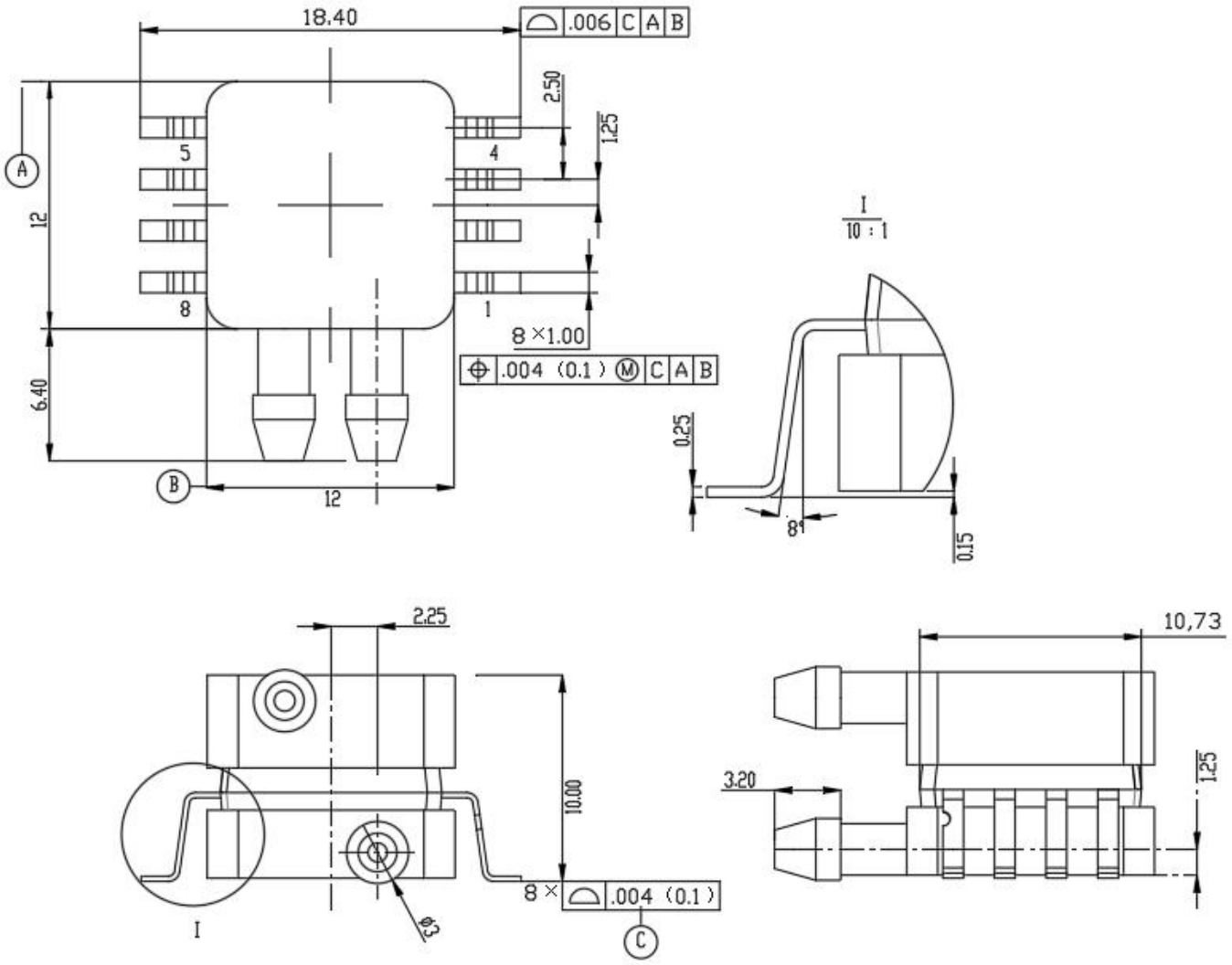
18.40
.006 C A B
2.50
1.25
5
4
8
1
A
12
6.40
B
12
8 ×1.00
.004 (0.1) M C A B
I
10 : 1
0.25
8°
0.15
2.25
10.00
8 × .004 (0.1) C
I
10,73
3.20
1.25

MCPV7025DP

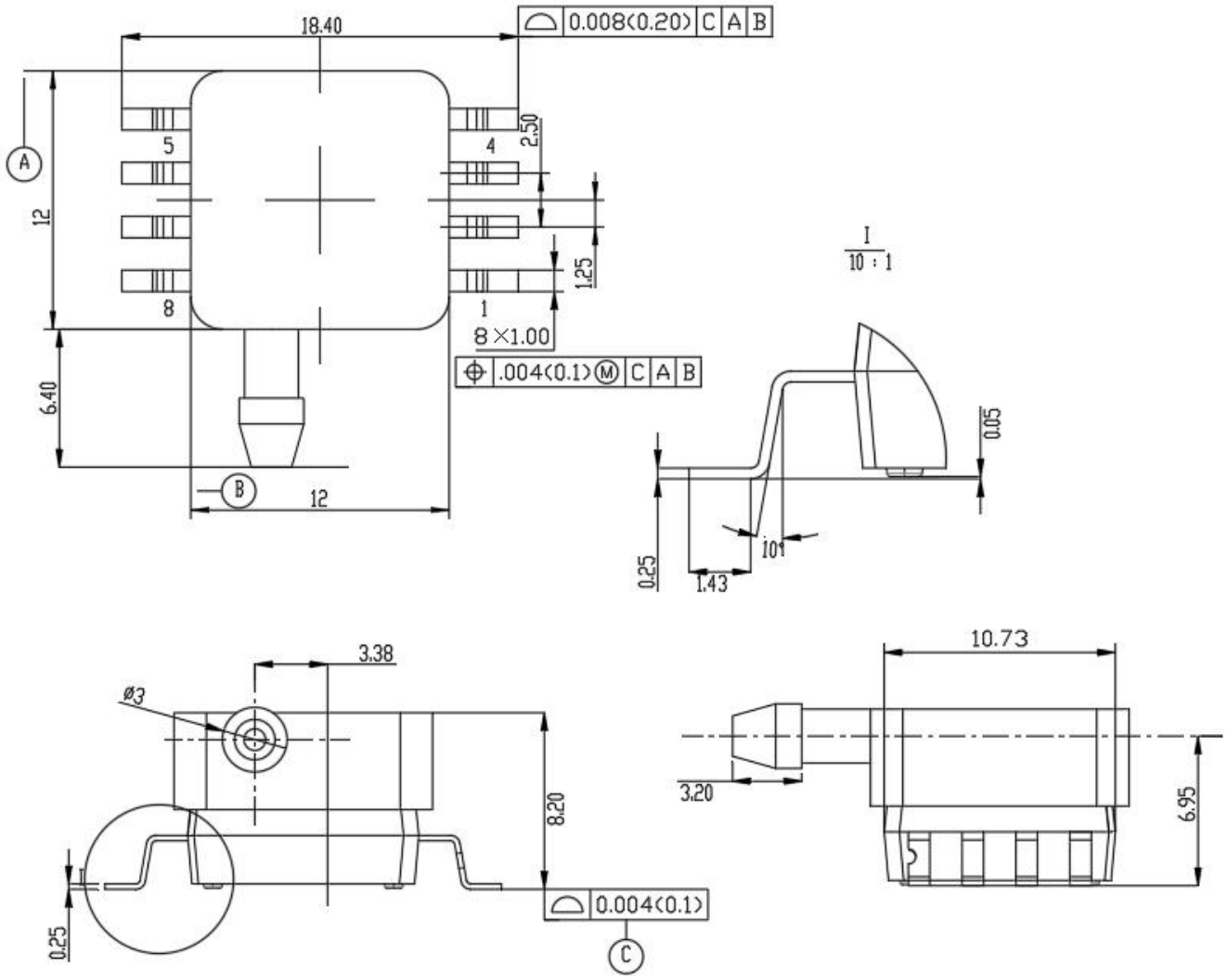
18.40
0.008(0.20) C A B
A
12
5
4
2.50
1.25
8
1
8×1.00
.004(0.1) M C A B
6.40
B
12
I
10 : 1
0.05
0.25
1.43
10°
3.38
ø3
8.20
0.25
0.004(0.1)
C
10.73
3.20
6.95

MCPV7025GP