Integrated Silicon Pressure Sensor for Altimeter or Barometer Applications Signal Conditioned, Temperature Compensated and Calibrated

MCP4115A Series

15 to 115 kPa (2.18 to 16.7 psi)
0.2 to 4.8 V Output

The MCP4115 series is designed to measure absolute air pressure in altimeter or barometer (BAP) applications. This sensor provides a high level analog output signal and temperature compensation. The integrated small size and high reliability make BAP sensors a logical and economical choice for application designers.

Features

- 1.5% maximum error over 0 °C to 85 °C
- Ideally suited for microprocessor or microcontroller-based systems
- Durable Epoxy Unibody element
- Easy-to-Use Chip Carrier Option

Application Examples

- Altimeter
- Baromete

ORDERING INFORMATION

Device Name	# of Ports			Pressure Type			Device Marking
	None	Single	Dual	Gauge	Differential	Absolute	
Unibody Package (MCP4115A Series)							
MCP4115A	•					•	MCP4115A
MCP4115AP		•				•	MCP4115AP

UNIBODY PACKAGES

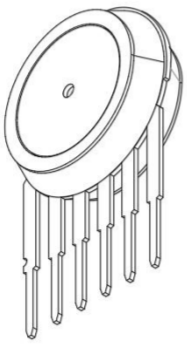

MCP4115A

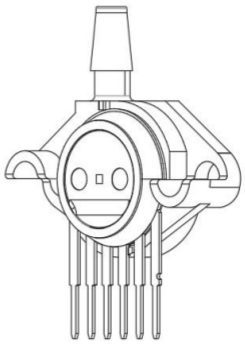

MCP4115AP

Operating Characteristics

Table 1. Operating Characteristics (Vs = 5.1 Vdc, TA = 25°C unless otherwise noted, P1＞P2. Decoupling circuit shown in Figure 2 required to meet Electrical Specifications.)

Characteristics		Symbol	Min	Typ	Max	Unit
Pressure Range (1)		P_{OP}	15	—	115	kPa
Supply Voltage (2)		V_S	4.85	5.1	5.35	Vdc
Supply Current		I_o	—	2.5	10	mAdc
Minimum Pressure Offset (3) @ VS = 5.1Volts	(0°C to 85°C)	V_{off}	0.135	0.204	0.273	Vdc
Full Scale Output(4) @ V_S = 5.1Volts	(0°C to 85°C)	V_{FSO}	4.724	4.794	4.863	Vdc
Full Scale Span(5) @ V_S = 5.1Volts	(0°C to 85°C)	V_{FSS}	—	4.59	—	Vdc
Accuracy(6)	(0°C to 85°C)	—	—	—	±1.5	$\%V_{FSS}$
Sensitivity		V/P	—	46	—	mV/kPa
Response Time(7)		t_R	—	2.0	—	ms

1. 1.0kPa is equal to 0.145 psi.
2. Device is ratiometric within this specified excitation range.
3. Offset (Voff) is defined as the output voltage at the minimum rated pressure.
4. Full Scale Output (V_{FSO}) is defined as the output voltage at the maximum or full rated pressure.
5. Full Scale Span (V_{FSS}) is defined as the algebraic difference between the output voltage at full rated pressure and the output voltage at the minimum rated pressure.
6. Accuracy (error budget) consists of the following:
   - Linearity: Output deviation from a straight line relationship with pressure over the specified pressure range.
   - Temperature Hysteresis: Output deviation at any temperature within the operating temperature range, after the temperature is cycled to and from the minimum or maximum operating temperature points, with zero differential pressure applied.
   - Pressure Hysteresis: Output deviation at any pressure within the specified range, when this pressure is cycled to and from the minimum or maximum rated pressure, at 25°C.
   - TcSpan: Output deviation over the temperature range of 0° to 85°C, relative to 25°C.
   - TcOffset: Output deviation with minimum rated pressure applied, over the temperature range of 0° to 85°C, relative to 25°C.
   - Variation from Nominal: The variation from nominal values, for Offset or Full Scale Span, as a percent of V_{FSS}, at 25°C.
7. Response Time is defined as the time for the incremental change in the output to go from 10% to 90% of its final value when subjected to a specified step change in pressure.

Note: Plugged or unplugged with power may cause permanent damage.

Maximum Ratings

Table 2. Maximum Ratings (1)

Rating	Symbol	Value	Unit
Overpressure(2) (P1 > P2)	P_{max}	400	kPa
Burst Pressure(2) (P1 > P2)	P_{burst}	1000	kPa
Storage Temperature	T_{stg}	–40 to +125	°C
Operating Temperature	T_A	–40 to +125	°C

1. TC = 25°C unless otherwise noted.
2. Exposure beyond the specified limits may cause permanent damage or degradation to the device.

Figure 1 shows a block diagram of the internal circuitry.

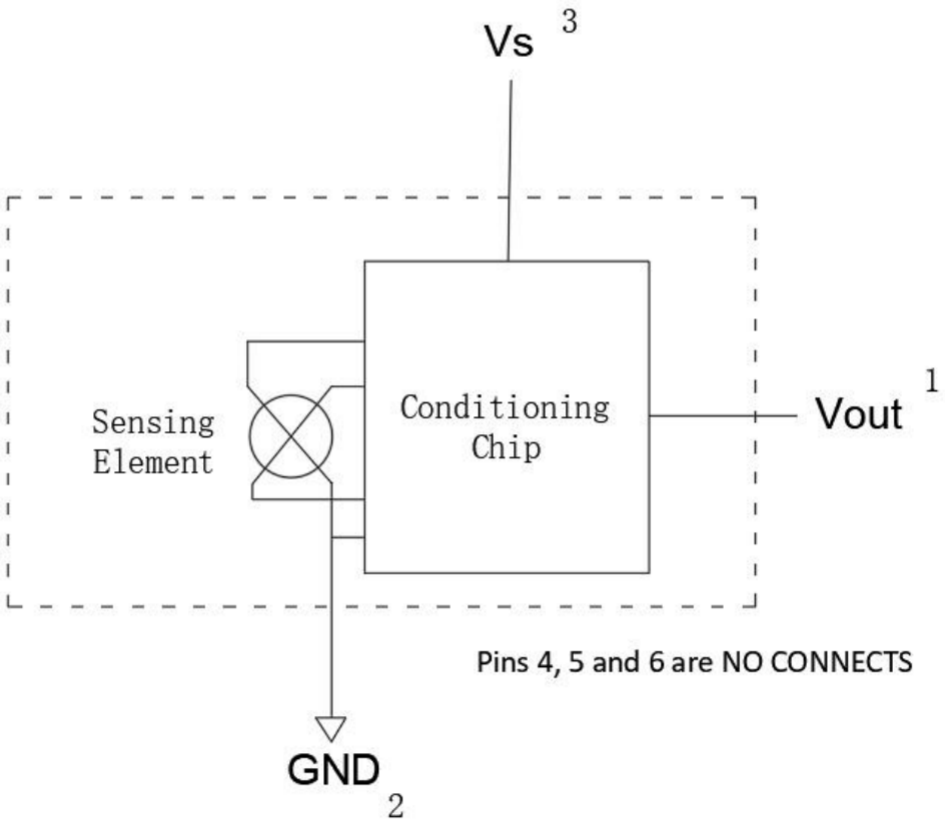

Figure 1. Pressure Sensor Schematic

TEMPERATURE COMPENSATION AND CALIBRATION

A silicone gel isolates the die surface and wire bonds from the environment, while allowing the pressure signal to be transmitted to the sensor diaphragm.

The MCP4115A series pressure sensor operating characteristics, and internal reliability and qualification tests are based on use of dry air as the pressure media. Media, other than dry air, may have adverse effects on sensor performance and long-term reliability. Contact the factory for information regarding media compatibility in your application.

Figure 2 shows the recommended decoupling circuit for interfacing the integrated sensor to the A/D input of a microprocessor or microcontroller.

Figure 3 shows the sensor output signal relative to pressure input. Typical, minimum, and maximum output curves are shown for operation over a temperature range of 0° to 85°C using the decoupling circuit shown in Figure 2.

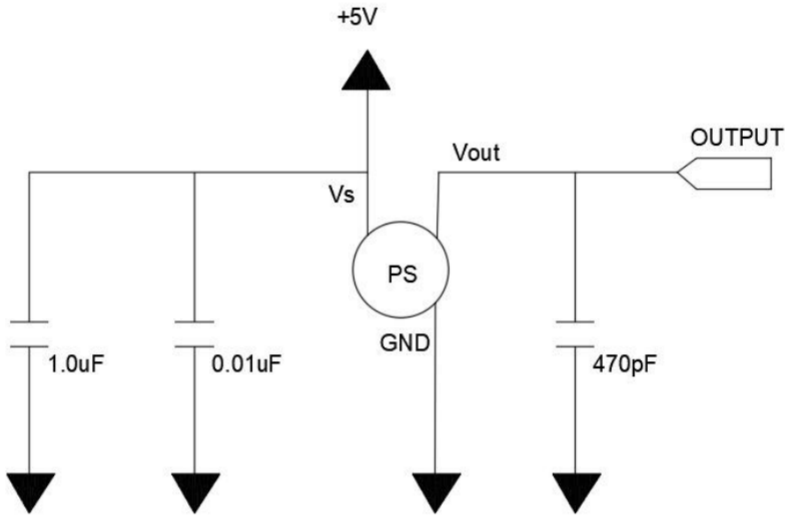

Figure 2. Recommended Power Supply Decoupling and Output Filtering

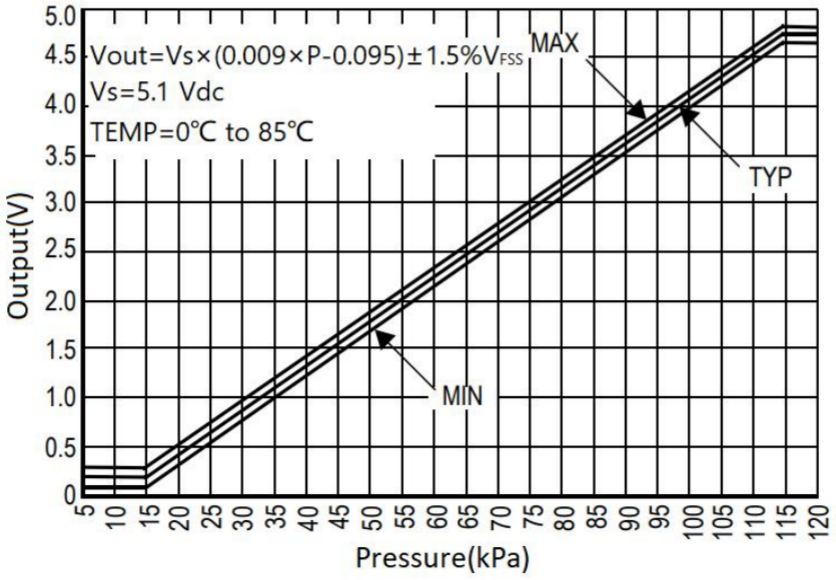

Figure 3. Output vs. Absolute Pressure

PACKAGE DIMENSIONS

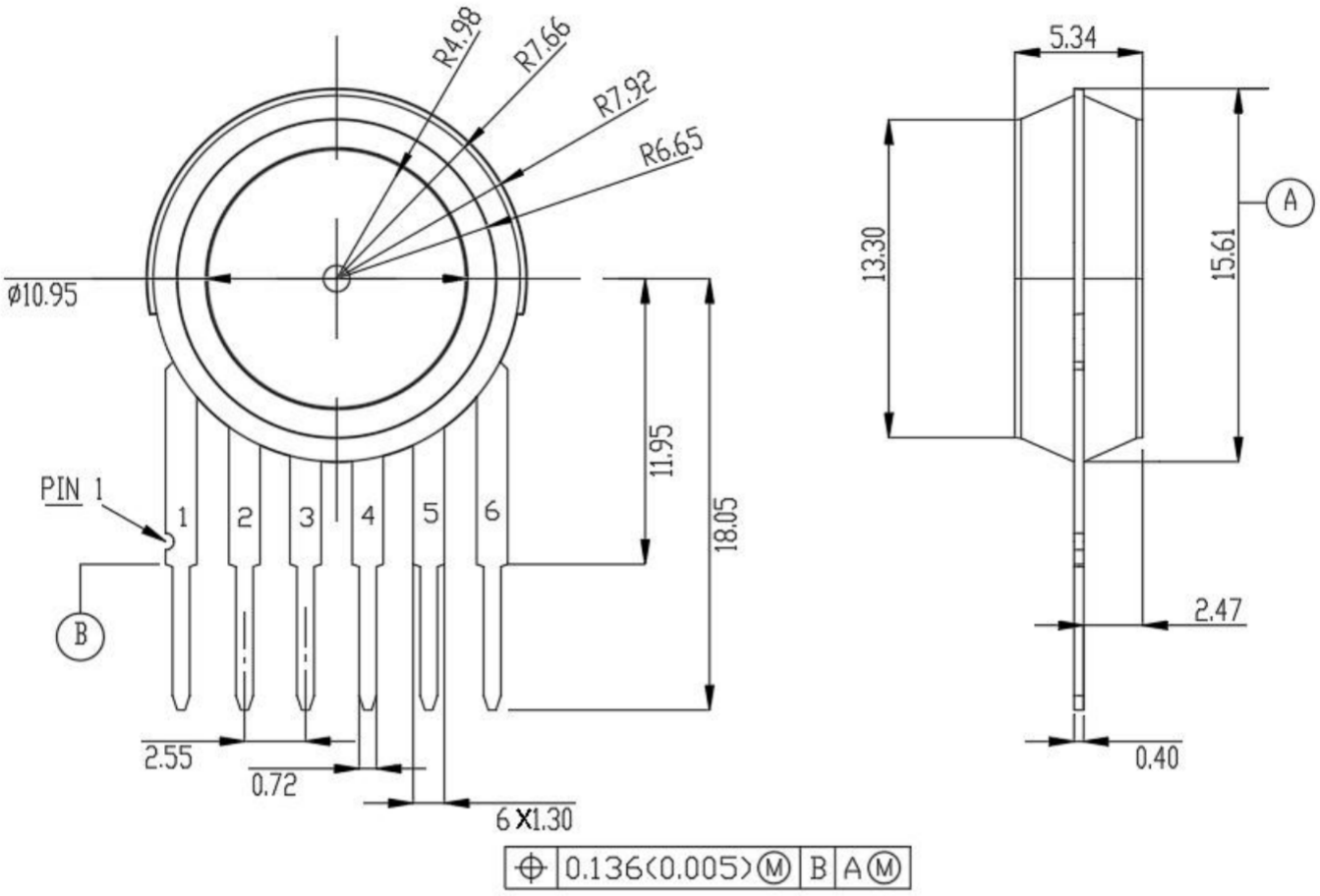

MCP4115A

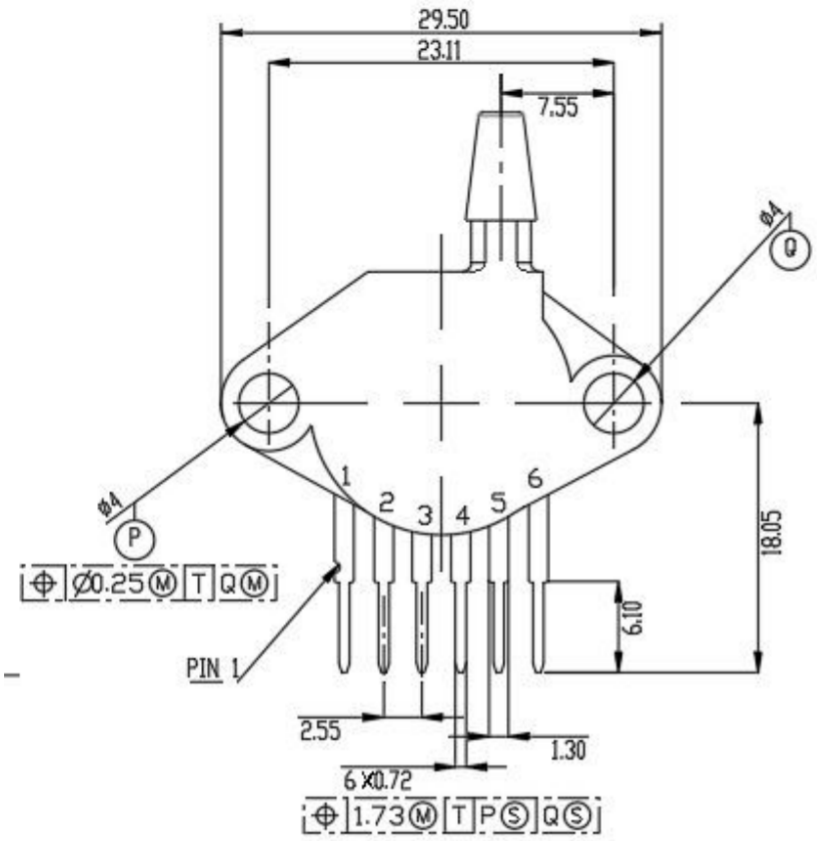
29.50
23.11
7.55
ø4
Q
ø4
P
Ø0.25 M T Q M
1
2
3
4
5
6
18.05
6.10
PIN 1
2.55
1.30
6 X0.72
1.73 M T P S Q S

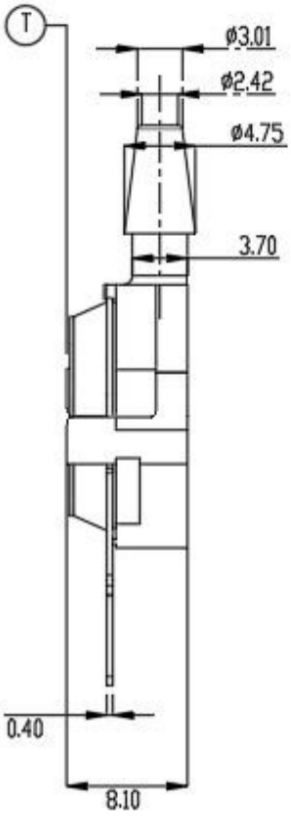
T
ø3.01
ø2.42
ø4.75
3.70
0.40
8.10

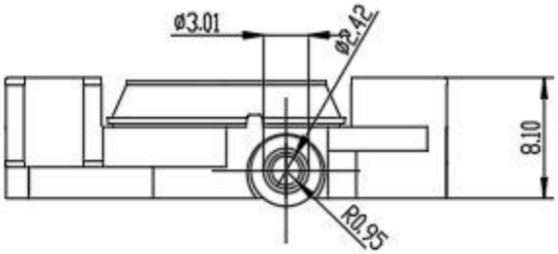
ø3.01
ø2.42
8.10
R0.95

MCP4115AP