SMART DISPLAY SPECIFICATION



RAYSTAR Optronics, Inc.
曜凌光電股份有限公司

曜凌光電股份有限公司
Raystar Optronics, Inc.
T: +886-4-2565-0761 | F: +886-4-2565-0760
salescontact@raystar-optronics.com | www.raystar-optronics.com

RL0F00050000FGDADSA00

Summary

5-inch Smart Display (RS485 series with GPIO) Feature

1. Input voltage dynamic range 5V to 28V, typical voltage 12V.
2. Self-testing after booting function.
3. RS485 communication interface.
4. Built in 16MB external flash memory to store the font and Object Dictionary Data.
5. Support projected capacitive touch panel (PCAP).
6. Build in buzzer and can be controlled by Master Device.
7. Demo set HOST can be used on multiple platforms, such as Computer (with USB to CAN Dongle), MCU, Raspberry Pi (with PiCAN2).
8. GPIO PIN support.

RAYSTAR OPTRONICS

Product Information

General Information

Item	Standard Value	Unit
Operating Voltage	5V~ 28V dynamic	Vdc
Communication Interface	RS485	--
MCU	STM32F750	N/A
Flash Memory	16	MB
LCD Display Size	5.0	inch
Dot Matrix	800× 3(RGB) × 480	dot
Module Dimension	132.7(W) ×75.8(H) ×12.5	mm
Active Area	108(W) ×64.8 (H)	mm
Pixel Pitch	0.135(W) ×0.135(H)	mm
Brightness	Min: 300; Typ: 400	cd/m^2
LCD Type	TFT, Normally Black, Transmissive	
View Direction	80/80/80/80	
Aspect Ratio	15:9	
Touch Panel	Projected Capacitive Touch Panel, PCAP	
Surface	Glare	

RAYSTAR OPTRONICS

Contour Drawing

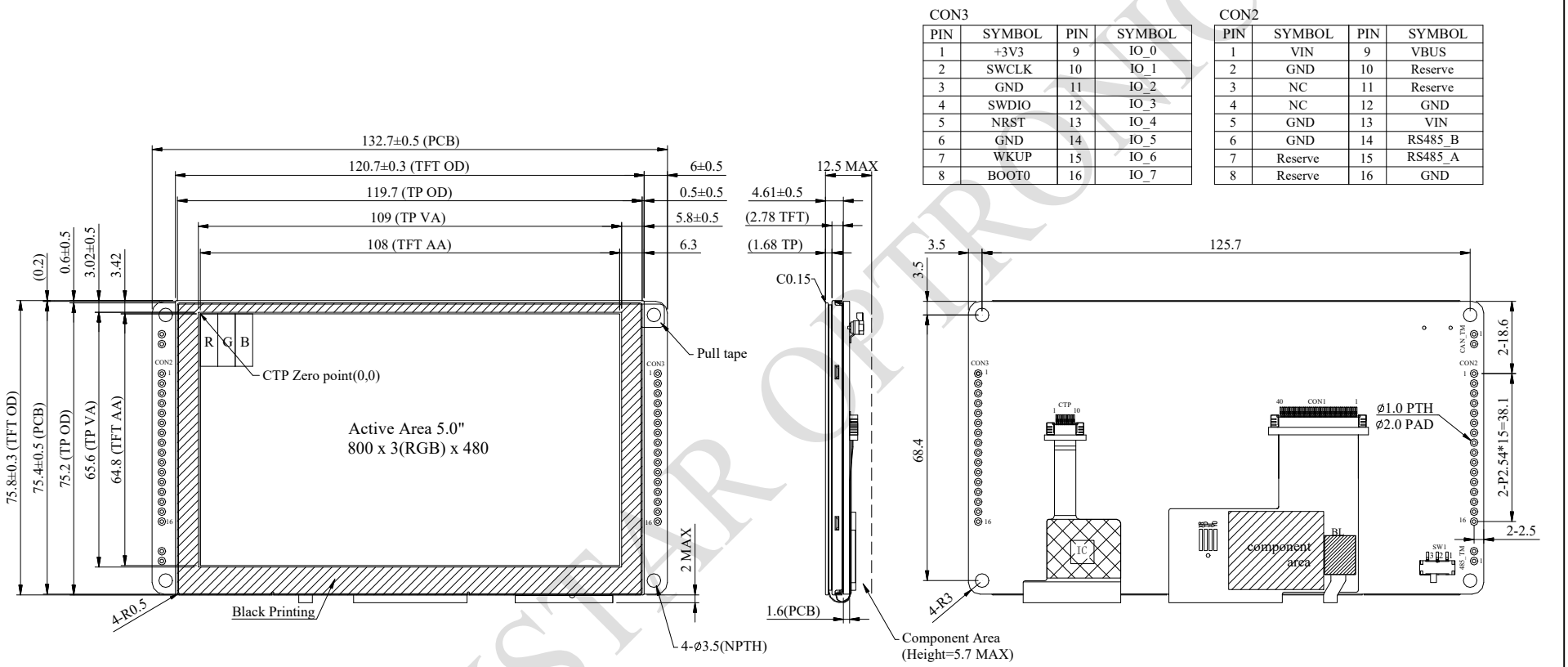

CON3

PIN	SYMBOL	PIN	SYMBOL
1	+3V3	9	IO_0
2	SWCLK	10	IO_1
3	GND	11	IO_2
4	SWDIO	12	IO_3
5	NRST	13	IO_4
6	GND	14	IO_5
7	WKUP	15	IO_6
8	BOOT0	16	IO_7

CON2

PIN	SYMBOL	PIN	SYMBOL
1	VIN	9	VBUS
2	GND	10	Reserve
3	NC	11	Reserve
4	NC	12	GND
5	GND	13	VIN
6	GND	14	RS485_B
7	Reserve	15	RS485_A
8	Reserve	16	GND

The non-specified tolerance of dimension is ±0.3 mm.

RAYSTAR OPTRONICS

Absolute Maximum Ratings

Item	Symbol	Min	Typ	Max	Unit
Operating Temperature	TOP	-30	—	+80	℃
Storage Temperature	TST	-30	—	+80	℃

Electrical Characteristics

Item	Symbol	Min	Typ	Max	Unit
Supply Voltage	VCC	5	12	28	V
Supply Current	ICC	670	240	110	mA
I/O pin Voltage	--	--	--	3.3	V

BOM

Item	Description
LCM	RFF500F-AWW-DNG
PCBA	SV10005R000FG00N0104

RAYSTAR OPTRONICS

Interface

CON2 Definition

Pin	Symbol	Function	Remark
1	VIN	Power supply 5V to 28V input	Input
2	GND	Power supply GND input	Input
3	NC	-	-
4	NC	-	-
5	GND	Power supply GND input	GND
6	GND	Power supply GND input	GND
7	Reserve	-	-
8	Reserve	-	-
9	VBUS	Power supply 5V input	Input
10	Reserve	-	-
11	Reserve	-	-
12	GND	Power supply GND input	Input
13	VIN	Power supply 5V to 28V input	Input
14	RS485_B	RS485 DATA-	I/O
15	RS485_A	RS485 DATA+	I/O
16	GND	Power supply GND input	Input

RAYSTAR OPTRONICS

CON3 Definition

Pin	Symbol	Function	Remark
1	+3V3	3.3V power for JTAG interface	Output
2	SWCLK	CLK pin for JTAG interface	Input
3	GND	GND for JTAG interface	Output
4	SWDIO	Data pin for JTAG interface	I/O
5	NRST	Reset pin for JTAG interface	Input
6	GND	GND	Output
7	WKUP	WKup,ADC,Timer,Event,I/O	TTL signal voltage is 3.3V
8	BOOT0	Lo: Internal flash boot (Default) Hi: External flash boot	TTL signal voltage is 3.3V
9	IO0	ADC,DAC,Timer,Event,I/O	TTL signal voltage is 3.3V
10	IO1	ADC,Timer,Event,I/O	TTL signal voltage is 3.3V
11	IO2	ADC,Timer,Event,I/O	TTL signal voltage is 3.3V
12	IO3	RST,Timer,Event,I/O	TTL signal voltage is 3.3V
13	IO4	RST,Timer,Event,I/O	TTL signal voltage is 3.3V
14	IO5	ADC,Timer,Event,I/O	TTL signal voltage is 3.3V
15	IO6	RST,Timer,Event,I/O	TTL signal voltage is 3.3V
16	IO7	RST,ADC,Event,I/O	TTL signal voltage is 3.3V

RAYSTAR OPTRONICS