BDH 20011

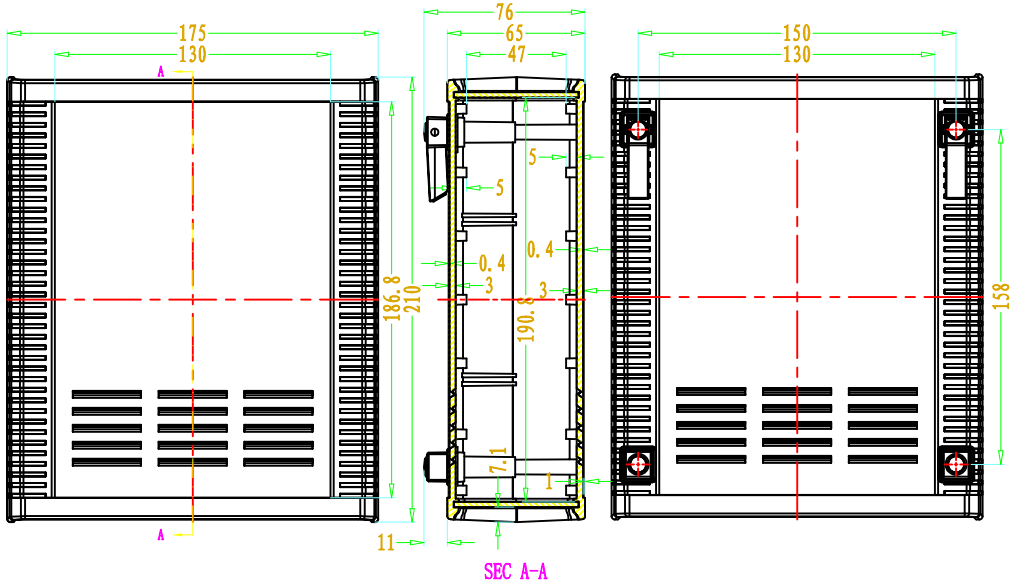

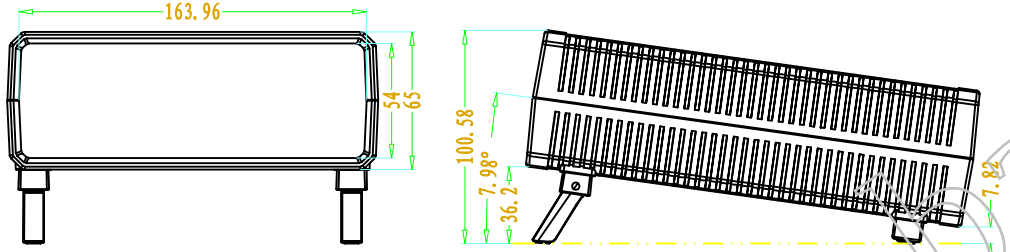

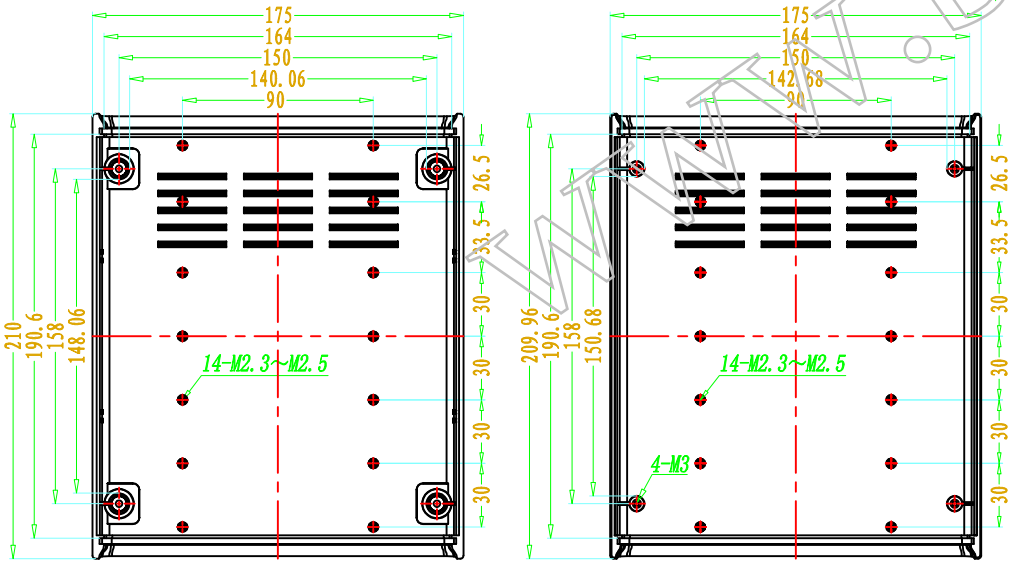

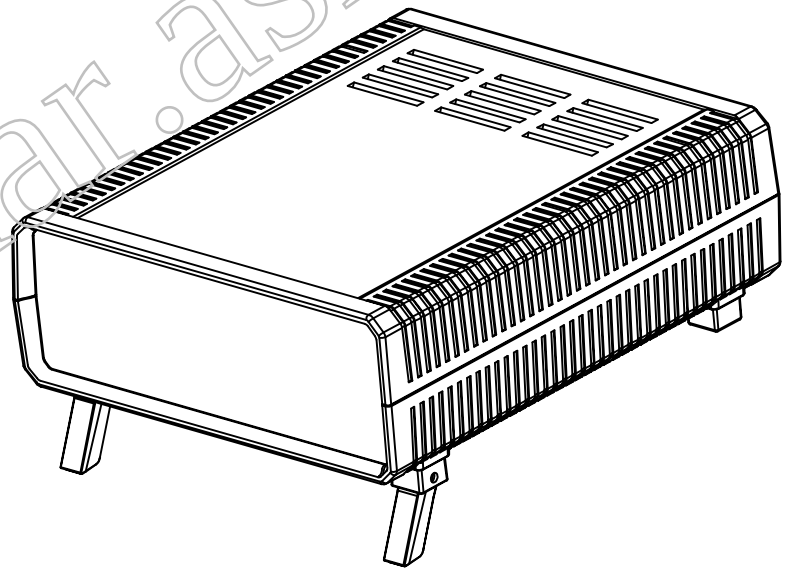

www.bahar.asia

BAHAR
WWW.BAHAR.ASIA

Accessories

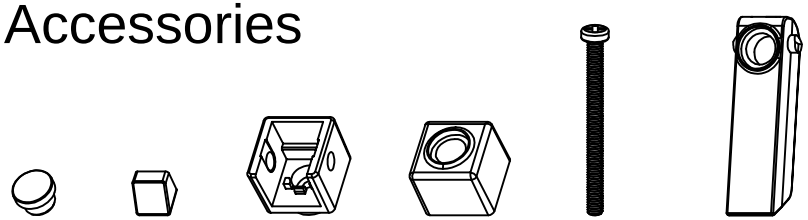

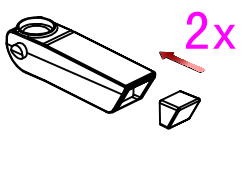

①

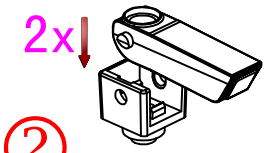

②

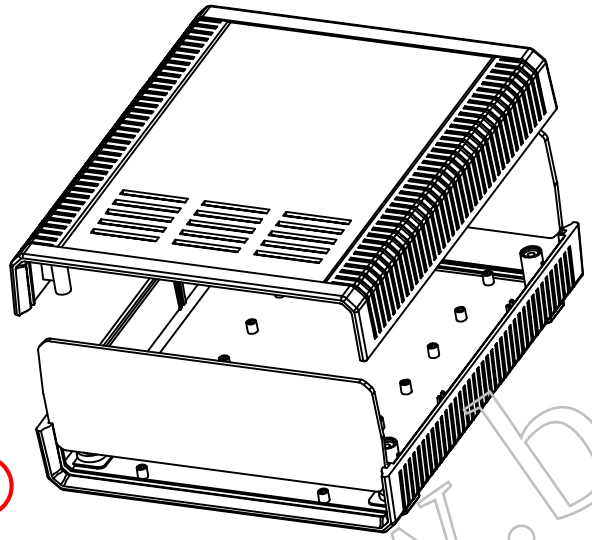

③

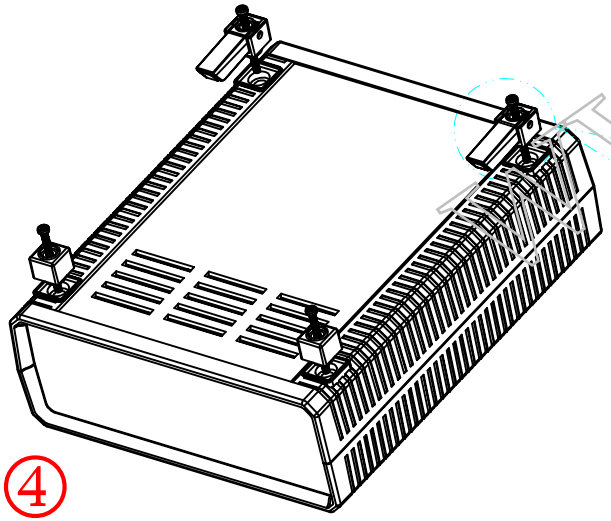

④

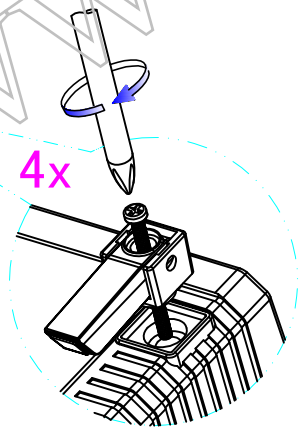

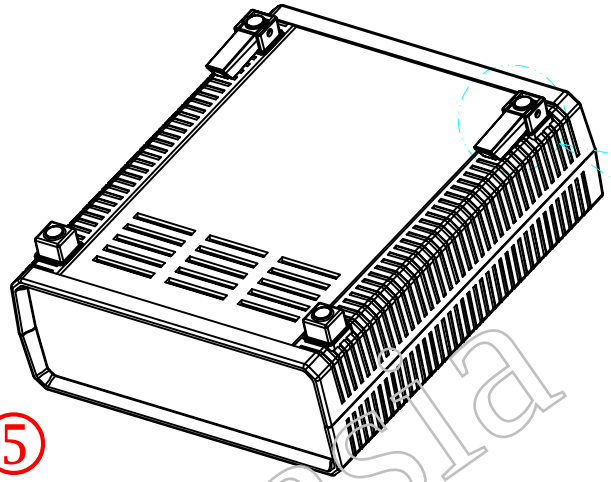

⑤

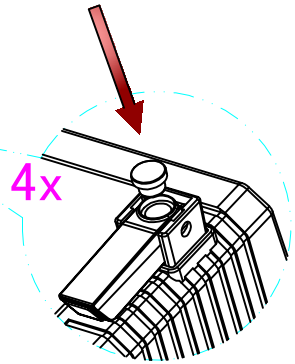

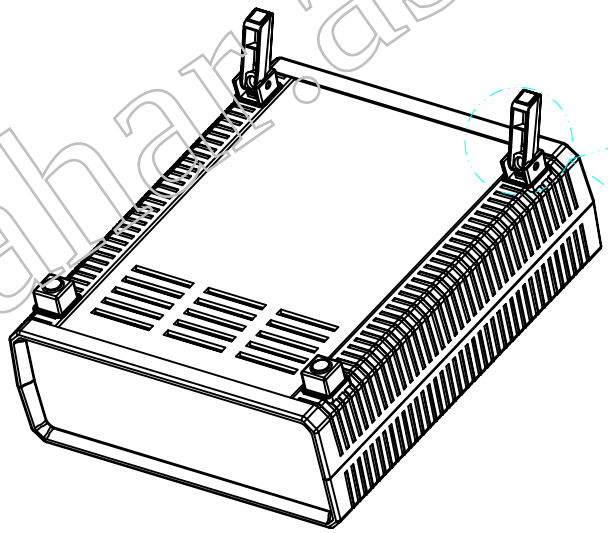

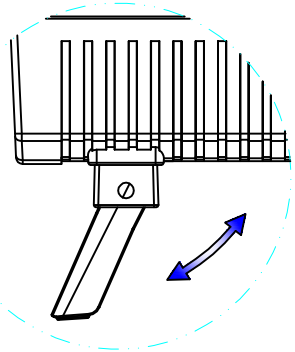

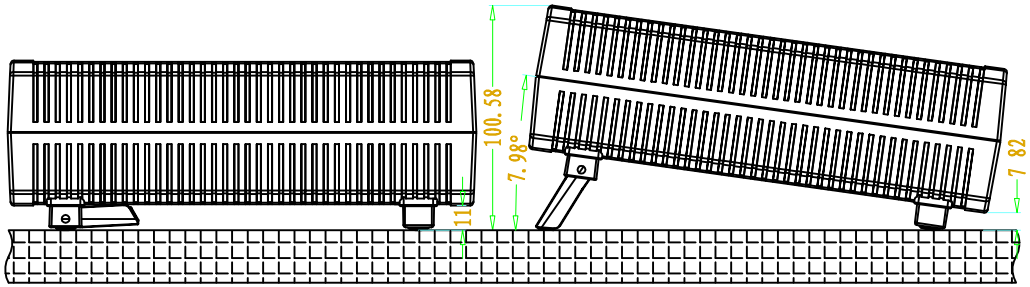

www.bahar.asia