P-DUKE POWER

TAD40 Single Series

2 X 3 Inch AC-DC POWER SUPPLIES
Up to 40 Watts

3 YEARS WARRANTY

RoHS COMPLIANT

REACH COMPLIANT

+85°C / -40°C AMBIENT TEMP.



Automation · Datacom · IPC

Industry · Measurement · Telecom

Medical · Automobile · Boat

Charger · PV · Railway

c UL us · CB · CE · UKCA

FC · POWER SAVE

3000 VAC Reinforced Insulation · ADJ. Output Voltage · Internal EN55032 Class B Filter · LOW Leakage Current · LOW Standby Power · Operating Altitude 5000 meter · Protection Class I Class II · OCP · OVP · SCP

PART NUMBER STRUCTURE

T	A	D	40	U	S	12	C	-	□	□	□
Application	**Package Code**	**Dimension Code**	**Output Power (W)**	**Input Voltage (VAC)**	**Output Quantity**	**Output Voltage (VDC)**	**Protection Type**		**Connector Options**	**Application Options**	**Conformal Coating Options**
Industry Application	**A:**Open type **U:**U chassis type **E:**Enclosed type **D:**Din rail type			**U:**Universal 85 ~ 264	**S:**Single	**05:**5 **7P5:**7.5 **09:**9 **12:**12 **121:**12 **15:**15 **151:**15 **18:**18 **24:**24 **28:**28 **36:**36 **48:**48 **53:**53	**C:**CLASS I **D:**CLASS II □:CLASS I (※NRND) **B:**CLASS II (※NRND) **※NRND:**Not recommended for new designs		□: JST **M:** Molex **T:** Terminal Block	□: None **C:** OVC III□ **A:** DC IN* *(Only for TAD CLASS II)	□: None **R:** Conformal Coating

TECHNICAL SPECIFICATION All specifications are typical at 230VAC input, full load and 25℃ unless otherwise noted

Model Number	Input Range	Output Voltage	Output Current Natural Convection	Max. Output Power	Input Power @No Load	Efficiency	Maximum Capacitor Load
	VAC	VDC	A	W	W	%	μF
TAD40US05C TUD40US05C TED40US05C TDD40US05C	85 ~ 264	5	8	40	0.11	90	16000
TAD40US7P5C TUD40US7P5C TED40US7P5C TDD40US7P5C	85 ~ 264	7.5	5.34	40	0.11	90	7120
TAD40US09C TUD40US09C TED40US09C TDD40US09C	85 ~ 264	9	4.45	40	0.11	91	4945
TAD40US12C TUD40US12C TED40US12C TDD40US12C	85 ~ 264	12	3.34	40	0.11	92	2785
TAD40US121C TUD40US121C TED40US121C TDD40US121C	85 ~ 264	12	3.34	40	0.11	90	2785
TAD40US15C TUD40US15C TED40US15C TDD40US15C	85 ~ 264	15	2.67	40	0.11	92	1780
TAD40US151C TUD40US151C TED40US151C TDD40US151C	85 ~ 264	15	2.67	40	0.11	90	1780
TAD40US18C TUD40US18C TED40US18C TDD40US18C	85 ~ 264	18	2.23	40	0.11	91	1250
TAD40US24C TUD40US24C TED40US24C TDD40US24C	85 ~ 264	24	1.67	40	0.11	92	700
TAD40US28C TUD40US28C TED40US28C TDD40US28C	85 ~ 264	28	1.43	40	0.11	91	510
TAD40US36C TUD40US36C TED40US36C TDD40US36C	85 ~ 264	36	1.12	40	0.11	92	310
TAD40US48C TUD40US48C TED40US48C TDD40US48C	85 ~ 264	48	0.84	40	0.11	93	175
TAD40US53C TUD40US53C TED40US53C TDD40US53C	85 ~ 264	53	0.77	40	0.11	92.5	140

INPUT SPECIFICATIONS

Parameter	Conditions	Min.	Typ.	Max.	Unit
Operating input voltage range	AC input DC input	85 120		264 370	VAC VDC
Input frequency	AC input	47		63	Hz
Input current	100VAC and Full Load 240VAC and Full Load			1.0 0.5	A
No load input power	230VAC		0.11		Watts
Leakage current	264VAC		75		μA
Start up time				1000	ms
Rise time			20		ms
Hold up time	115VAC and Full Load		25		ms
Input inrush current	230VAC		60		A
Input protection	Internal fuse		T3.15A/250VAC		

OUTPUT SPECIFICATIONS

Parameter	Conditions		Min.	Typ.	Max.	Unit
Output power					40	Watts
Initial set voltage accuracy	230VAC and Full Load		-1.0		+1.0	%
Line regulation	Low Line to High Line at Full Load		-0.2		+0.2	%
Load regulation	No Load to Full Load	5Vout	-0.7		+0.7	%
		Others	-0.5		+0.5	
	10% Load to 90% Load	5Vout	-0.6		+0.6	
		Others	-0.4		+0.4	
Voltage adjustability	Single output	53Vout	-20		+10	%
		Others	-10		+10	
Minimum load				0		%
Ripple and noise	Measured by 20MHz bandwidth					mVp-p
	With a 10μF/25V 1206 X7R MLCC	5Vout, 7.5Vout, 9Vout		75		
		12Vout, 15Vout, 18Vout		75		
	With a 1μF/50V 1206 X7R MLCC	24Vout, 28Vout, 36Vout		75		
	With a 0.1μF/100V 1206 X7R MLCC	48Vout, 53Vout		150		
Temperature coefficient			-0.02		+0.02	%/℃
Transient response	Load step from 50 ~ 75% change at 2.5A/μs	Peak deviation			3	%Vout
		Recovery time		600		μs
Over voltage protection	% of Vout(nom); Latch mode		125		140	%
Over load protection	% of Iout rated; Hiccup mode			145		%
Short circuit protection				Continuous, automatics recovery		

GENERAL SPECIFICATIONS

Parameter	Conditions		Min.	Typ.	Max.	Unit
Isolation voltage	1 minute (Reinforced insulation)	Input to Output	3000			VAC
		Input (Output) to F.G.	2500			
Isolation resistance	500VDC		0.1			GΩ
Switching frequency	230VAC	5Vout		70		kHz
		Others		120		
Safety approvals	IEC/ EN/ UL62368-1				UL:E193009 CB:UL(Demko)	
Weight		TAD			114g (4.02oz)	
		TUD			154g (5.43oz)	
		TED			169g (5.96oz)	
		TDD			190g (6.70oz)	
MTBF	MIL-HDBK-217F, Full load				3.010×10^6 hrs	

ENVIRONMENTAL SPECIFICATIONS

Parameter	Conditions	Min.	Typ.	Max.	Unit
Operating ambient temperature	Natural convection With derating	-40		+85	℃
Storage temperature range		-40		+85	℃
Operating altitude				5000	m
Shock				IEC60068-2-27	
Vibration				IEC60068-2-6	
Relative humidity	Non-condensing			5% to 95% RH	

EMC SPECIFICATIONS

Parameter	Conditions	Level
EMI	EN55032 and FCC Part 15 External components may be required for class I application.	Conducted Class B Radiated Class B
Harmonic currents	EN61000-3-2 Full Load	Class A
Voltage flicker	EN61000-3-3	
EMS	EN55035 and Complies with EN61850-3	
ESD	EN61000-4-2	Perf. Criteria A
Radiated immunity	EN61000-4-3 20 V/m	Perf. Criteria A
Fast transient	EN61000-4-4 ± 4kV	Perf. Criteria A
Surge	EN61000-4-5 DM ± 2kV and CM ± 4kV	Perf. Criteria A
Conducted immunity	EN61000-4-6 20 Vr.m.s	Perf. Criteria A
Power frequency magnetic field	EN61000-4-8 100 A/m	Perf. Criteria A
Dip and interruptions	EN61000-4-11	
Damped oscillatory wave	EN61000-4-18 DM ± 1kV and CM ± 2.5kV	Perf. Criteria A

CHARACTERISTIC CURVE

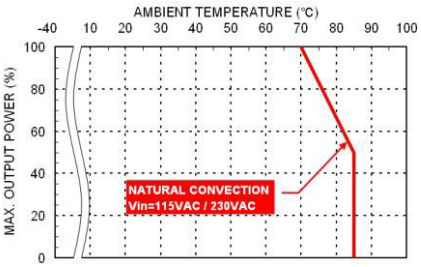

Derating Curve vs. Ambient Temperature

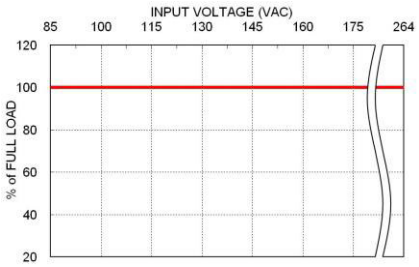

T□D40 Derating Curve vs. Input Voltage

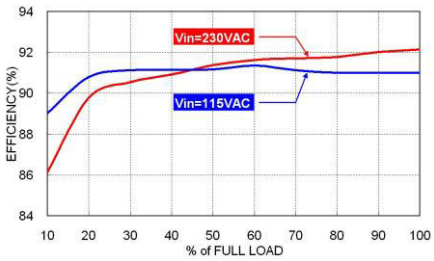

T□D40US24B Efficiency vs. Output Load

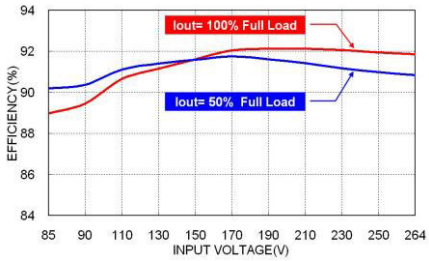

T□D40US24B Efficiency vs. Input Voltage

MECHANICAL DRAWING

TAD Open type

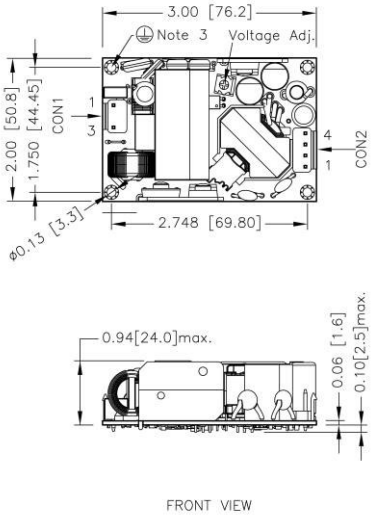

1. All dimensions in inch [mm]
   Tolerance : x.xx±0.02 [x.x±0.5] x.xxx±0.010 [x.xx±0.25]
2. The screw locked torque: MAX 3.4kgf-cm/0.33N-m
3. The screws holes can be considered as PE connection for CLASS I application.

TDD Din rail type

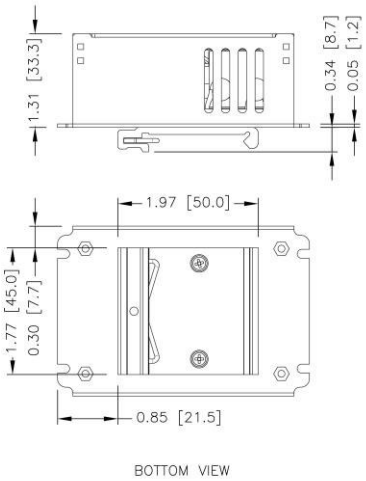

1. All dimensions in inch [mm]
   Tolerance : x.xx±0.02 [x.x±0.5] x.xxx±0.010 [x.xx±0.25]

TED Enclosed type

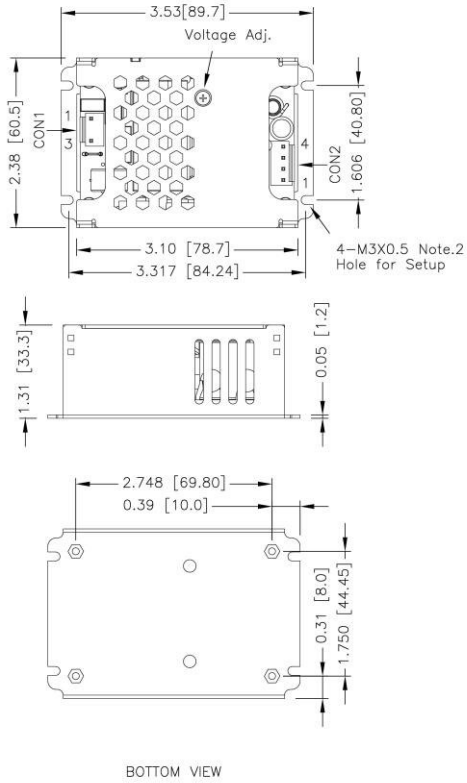

1. All dimensions in inch [mm]
   Tolerance : x.xx±0.02 [x.x±0.5] x.xxx±0.010 [x.xx±0.25]
2. The screw locked torque: MAX 4.2kgf-cm/0.41N-m

TUD U chassis type

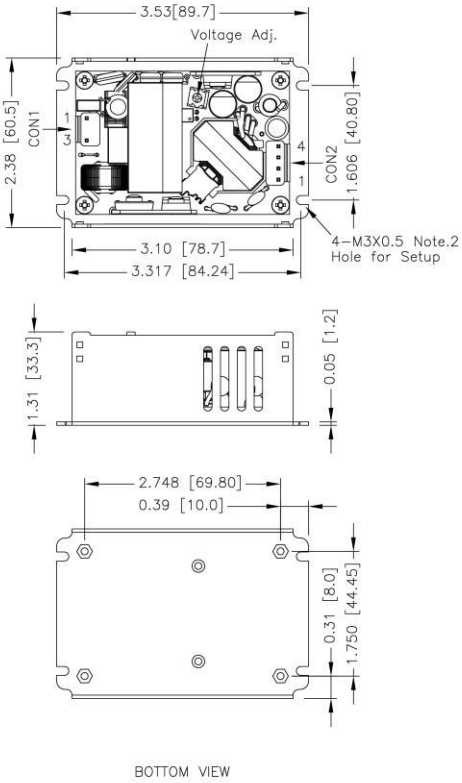

1. All dimensions in inch [mm]
   Tolerance : x.xx±0.02 [x.x±0.5] x.xxx±0.010 [x.xx±0.25]
2. The screw locked torque: MAX 4.2kgf-cm/0.41N-m

CONNECTOR CONNECTIONS

CON1 – Input Connector

Pin Number	AC Input	DC Input
		T□D40USXXC、T□D40USXXD
Pin 1	Line	DC+
Pin 3	Neutral	DC-

CON2 – Output Connector

Pin 1,2	-Vout
Pin 3,4	+Vout

*Either one of four screws holes of Chassis type can be considered as PE connection for CLASS I application.

CONNECTOR OPTIONS

Blank: JST Type



Mates with housing
CON1: **VHR-3N**
CON2: **VHR-4N**

Crimp terminals
CON1: **SVH-21T-P1.1**
CON2: **SVH-21T-P1.1**

-M Molex Type



Mates with housing
CON1: **09-50-8031**
CON2: **09-50-8041**

Crimp terminals
CON1: **SD-2478**
CON2: **SD-2478**

-T Terminal Block



Screw locked torque
MAX 2Kgf.cm/0.2N.m

Wire dimension range
26 ~ 16AWG

P-DUKE Technology Co., Ltd.

Tel +886-4-2359-0668
Fax +886-4-2359-1337
Email sales@pduke.com
Web www.pduke.com
Add No. 36, 22nd Rd., Taichung Industrial Park, Taichung, Taiwan, R.O.C.