P-DUKE POWER

TAF300 Series

2 X 4 Inch AC-DC POWER SUPPLIES
Up to 300 Watts

3 YEARS WARRANTY

RoHS COMPLIANT

REACH COMPLIANT

+85°C / -40°C AMBIENT TEMP.



Automation | Datacom | IPC

Industry | Measurement | Telecom

Automobile | Boat | Charger

Medical | PV | Railway

PEAK POWER | 3000 VAC Reinforced Insulation | ADJ. Output Voltage | Internal EN55032 Class B Filter | LOW Leakage Current | LOW Standby Power | Operating Altitude 5000 meter | Protection Class I Class II | FAN Speed Control | REMOTE ON OFF | POWER GOOD | OCP

OTP | OVP | SCP | OVCIII

PART NUMBER STRUCTURE

TAF300 U S 12 A -M □ □ F3 □

Series Name	Universal Input (VAC)	Output Quantity	Output Voltage (VDC)	Protection Type	Package Options	Application Options	Fan Control Options	Electrical Options
	85~264	Single	**12:**12V **15:**15V **18:**18V **24:**24V **28:**28V **36:**36V **48:**48V **53:**53V	**A:** CLASS I **B:** CLASS II	□: Open type **E1:** Enclosed type **U2:** Base plate type **D1:** Din rail type	□: AC Input **C:** OVC III(2000m) **G:** DC Input	**F3:** No External FAN with fixed fan speed control **F4:** No External FAN with variable fan speed control **For E1/D1 Type Only** **F1:** External FAN with fixed fan speed control **F2:** External FAN with variable fan speed control	□: Standby power Remote control Power Good signal **N:** None

TECHNICAL SPECIFICATION All specifications are typical at 230VAC input, full load and 25℃ unless otherwise noted

Model Number	Input Range	Output Voltage	Output Current		Input Power @ No Load	Efficiency	Maximum Capacitor Load
			Natural Convection	Forced Air Cooling With 21 CFM			
	VAC	VDC	A	A	W	%	uF
TAF300US12A-MF3	85 ~ 264	12	15	25	0.3	91	20000
TAF300US15A-MF3	85 ~ 264	15	12	20	0.3	92	12000
TAF300US18A-MF3	85 ~ 264	18	10	16.66	0.3	93	9000
TAF300US24A-MF3	85 ~ 264	24	7.5	12.5	0.3	93	2400
TAF300US28A-MF3	85 ~ 264	28	6.42	10.71	0.3	93	2000
TAF300US36A-MF3	85 ~ 264	36	5	8.33	0.3	93	1000
TAF300US48A-MF3	85 ~ 264	48	3.75	6.25	0.3	93	650
TAF300US53A-MF3	85 ~ 264	53	3.4	5.67	0.3	93	470

INPUT SPECIFICATIONS

Parameter	Conditions		Min.	Typ.	Max.	Unit
Operating input voltage range	AC input DC input		85 120		264 370	VAC VDC
Input frequency	AC input		47		63	Hz
Input current	100VAC and Full Load 240VAC and Full Load				3.9 1.6	A
No load input power	230VAC	Option-F(with Fan) Others		3 0.3		Watts
Leakage current	264VAC				300	μA
Power Factor	230VAC and Full Load		0.9			
Start up time					2000	ms
Rise time				30		ms
Hold up time	115VAC and 225W		10			ms
Input inrush current	230VAC	Cold start			70	A
Input protection	Internal fuse			T5.0A/250VAC		

OUTPUT SPECIFICATIONS

Parameter	Conditions		Min.	Typ.	Max.	Unit
Output power	Forced air cooling Natural convection				300 180	Watts
Output peak power	Peak power Peak power time Peak power duty Average operation power (% of Full Load)			 5 20 50	360	Watts s % %
Initial set voltage accuracy	230VAC and Full Load		-1.0		+1.0	%
Line regulation	Low Line to High Line at Full Load		-0.2		+0.2	%
Load regulation	No Load to Full Load 10% Load to 90% Load		-0.5 -0.4		+0.5 +0.4	%
Voltage adjustability	Maximum output deviation is inclusive of remote sense		-10		+10	%
Minimum load				0		%
Ripple and noise	Measured by 20MHz bandwidth With a 1μF/100V 1206 X7R MLCC	12Vout 15Vout 18Vout 24Vout 28Vout 36Vout 48Vout 53Vout		120 150 180 240 280 360 480 530		mVp-p
Temperature coefficient			-0.02		+0.02	%/℃
Transient response	Load step from 50 ~ 75% change at 2.5A/μs Recovery within 1% Vout	Peak deviation Recovery time		3 600		% Vout μs
Over voltage protection	% of Vout(nom); Latch mode		115		135	%
Over load protection	% of Iout rated; Hiccup mode			150		%
Short circuit protection			Continuous, automatics recovery			
Main output remote control	Positive Logic Referenced to “-Control” *Standby power always present	Main power ON Main power OFF Input current of Control	Open or 3 ~ 12 VDC Short or 0 ~ 1.2VDC -0.5		 1	 mA
Main output Power Good signal	Referenced to “GND”	Power good Power off				Low Open collector
Standby power supply	Standby and fan power supply total power 8W	5Vout			1000	mA
Fan power supply		12Vout			500	mA

GENERAL SPECIFICATIONS

Parameter	Conditions		Min.	Typ.	Max.	Unit
Isolation voltage	1 minute (Reinforced insulation)	Input to Output Input (Output) to F.G.	3000 2000			VAC
Isolation resistance	500VDC		0.1			GΩ
Switching frequency	230VAC, Full load			140		kHz
Safety approvals	IEC/ EN/ UL 62368-1				UL:E193009 CB:UL(Demko)	
Weight		Open type Enclosed type Base plate type Din rail type			210g (7.40oz) 318g (11.21oz) 260g (9.17oz) 340g (11.99oz)	
MTBF	MIL-HDBK-217F Ta=25℃, Full load				1.056 x 10^6 hrs	

ENVIRONMENTAL SPECIFICATIONS

Parameter	Conditions		Min.	Typ.	Max.	Unit
Operating ambient temperature	With derating	Option –F (With Fan) Others	-40 -40		+80 +85	℃
Storage temperature range		Option –F (With Fan) Others	-40 -40		+80 +85	℃
Over temperature protection	Internal thermistor ; Hiccup mode			125		℃
Operating altitude					5000	m
Shock					IEC60068-2-27	
Vibration					IEC60068-2-6	
Relative humidity	Non-condensing				5% to 95% RH	

EMC SPECIFICATIONS

Parameter	Conditions		Level
EMI	EN55032 and FCC Part 15		Conducted Class B Radiated Class A
Harmonic currents	EN61000-3-2	Full Load	Class A
Voltage flicker	EN61000-3-3		
EMS	EN55035		
ESD	EN61000-4-2		Perf. Criteria A
Radiated immunity	EN61000-4-3	20 V/m	Perf. Criteria A
Fast transient	EN61000-4-4	± 2kV	Perf. Criteria A
Surge	EN61000-4-5	DM ± 1kV and CM ± 2kV	Perf. Criteria A
Conducted immunity	EN61000-4-6	20 Vr.m.s	Perf. Criteria A
Power frequency magnetic field	EN61000-4-8	30 A/m	Perf. Criteria A
Dip and interruptions	EN61000-4-11		

CHARACTERISTIC CURVE

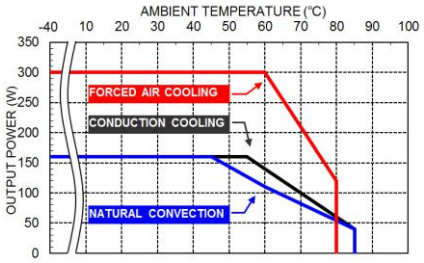

Derating Curve vs. Ambient Temperature
Vin=115VAC Open type

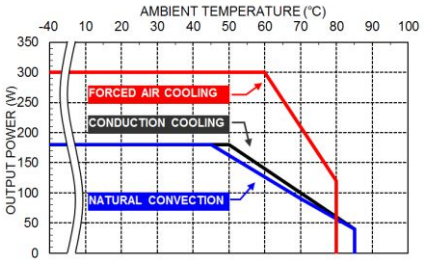

Derating Curve vs. Ambient Temperature
Vin=230VAC Open type

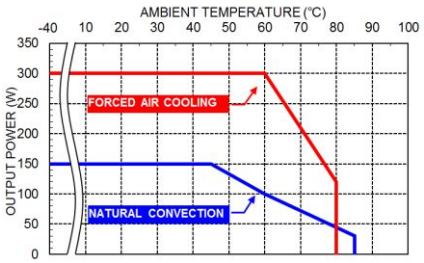

Derating Curve vs. Ambient Temperature
Vin=115VAC Enclosed type / Din rail type

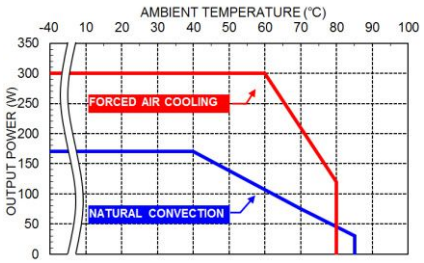

Derating Curve vs. Ambient Temperature
Vin=230VAC Enclosed type / Din rail type

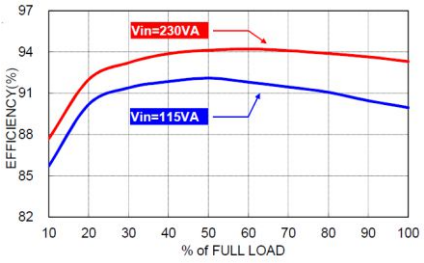

Efficiency vs. Output Load
TAF300US24 with Forced air cooling

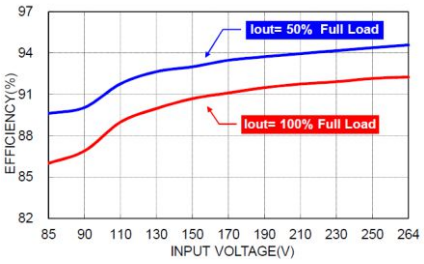

Efficiency vs. Input Voltage
TAF300US24 with Forced air cooling

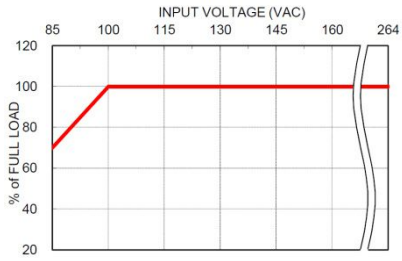

Derating Curve vs. Input Voltage
TAF300

MECHANICAL DRAWING

Open type- AC Input

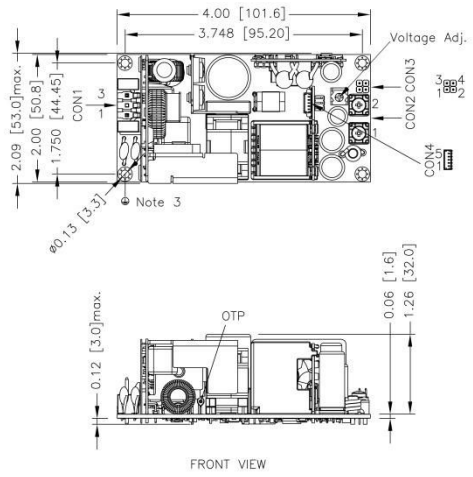

1.All dimensions in inch [mm]
Tolerance : x.xx±0.02 [x.x±0.5]
x.xxx±0.01 [x.xx±0.25]
2.The screw locked torque: MAX 3.4Kgf-cm/0.33N-m
3.The screws holes can be considered as PE connection for CLASS I application.

Open type- DC Input

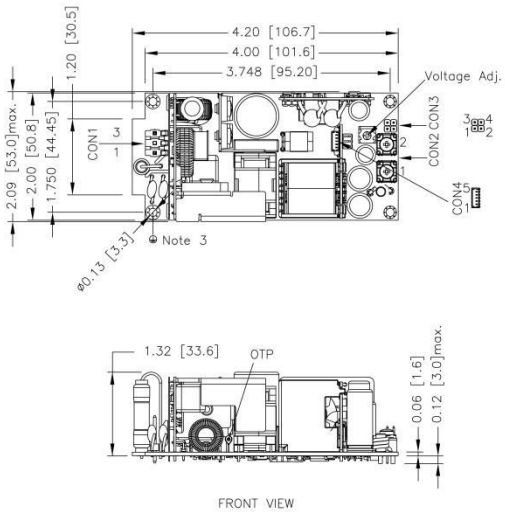

1.All dimensions in inch [mm]
Tolerance : x.xx±0.02 [x.x±0.5]
x.xxx±0.01 [x.xx±0.25]
2.The screw locked torque: MAX 3.4Kgf-cm/0.33N-m
3.The screws holes can be considered as PE connection for CLASS I application.

Base plate type

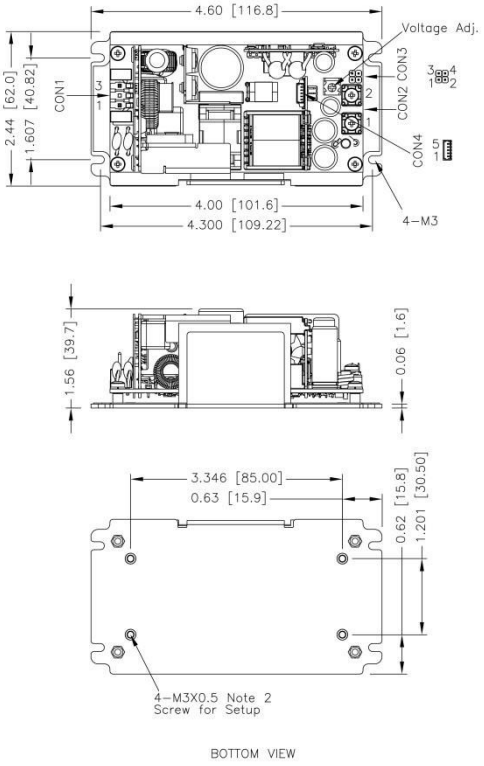

1.All dimensions in inch [mm]
Tolerance : x.xx±0.02 [x.x±0.5]
x.xxx±0.01 [x.xx±0.25]
2.The screw locked torque: MAX 4.2Kgf-cm/0.41N-m

MECHANICAL DRAWING(CONTINUED)

Enclosed type with FAN

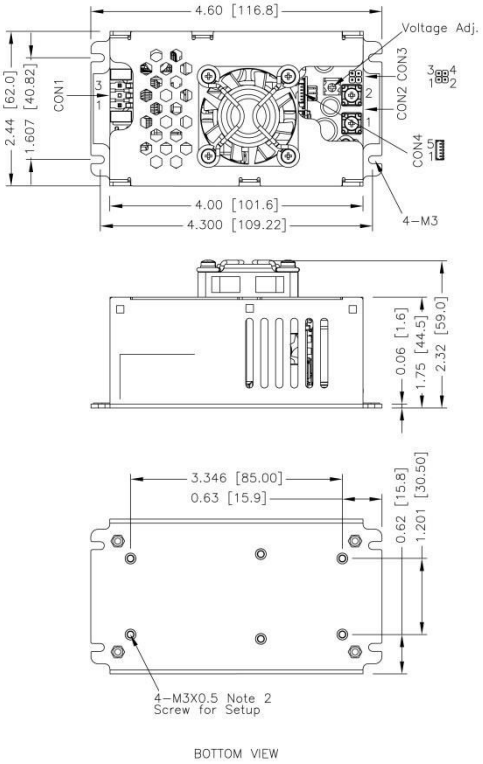

1.All dimensions in inch [mm]
Tolerance : x.xx±0.02 [x.x±0.5]
x.xxx±0.01 [x.xx±0.25]
2.The screw locked torque: MAX 4.2Kgf-cm/0.41N-m

Din rail type with FAN

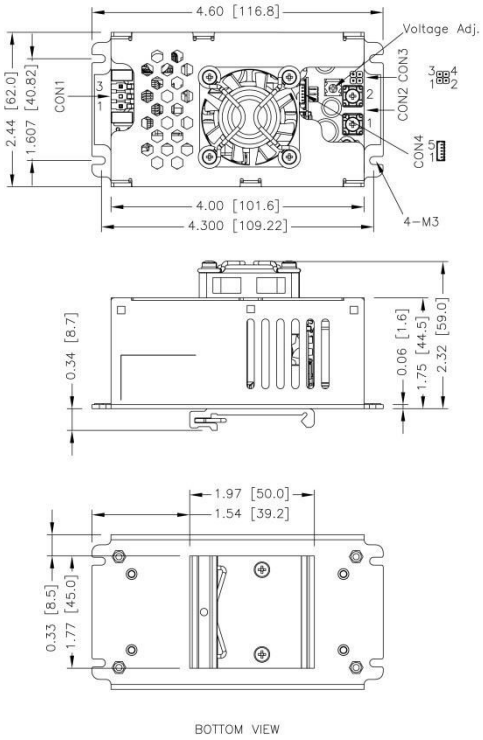

1.All dimensions in inch [mm]
Tolerance : x.xx±0.02 [x.x±0.5]
x.xxx±0.01 [x.xx±0.25]

CONNECTOR CONNECTIONS

CON1 – Input Connector

Pin Number	AC Input	DC Input
Pin 3	Line	DC+
Pin 1	Neutral	DC-

Mates with
Molex housing : **09-93-0300, 09-50-3031, 09-50-8031**
Molex crimp terminals : **2478**

CON2 – Output Connector

Pin 1	+Vout
Pin 2	-Vout

Mates with
KST ring terminal : **RVS2-3.7**
Screw locked torque : MAX 16.8Kgf.cm/1.65N.m

CON3 – Aux Connector

Pin 1	+Fan
Pin 2	-Fan
Pin 3	+V Sense
Pin 4	-V Sense

Mates with
Molex housing : **90143-0004**
Molex crimp terminals : **90119**

CON4 – Aux Connector

Pin 1	+Standby
Pin 2	-Standby
Pin 3	+PG
Pin 4	-Control
Pin 5	+Control

Mates with
Molex housing : **51021-0500**
Molex crimp terminals : **50058,50079**

P-DUKE Technology Co., Ltd.
Tel +886-4-2359-0668
Fax +886-4-2359-1337
Email sales@pduke.com
Web www.pduke.com
Add No. 36, 22nd Rd., Taichung Industrial Park, Taichung, Taiwan, R.O.C.