

ENERGY CAPACITORS · **EDLC** RADIAL **SINGLE CELL** TYPE

SRP PR SERIES



2,7V
at 70°C

· Standard

· Fast charge/discharge

· High power density

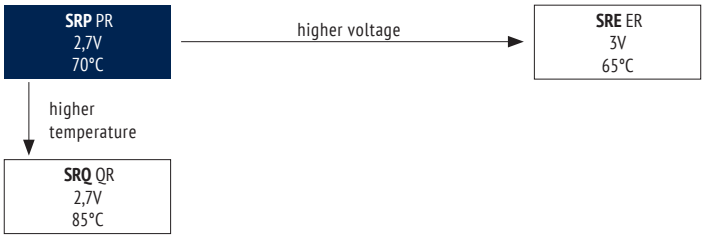

ITEM	CHARACTERISTICS
Operating Temperature Range (°C)	-40 ~ +70 (-40 ~ +85 at 2,3V)
Rated Voltage (V)	2,7
Surge Voltage (V)	2,85
Capacitance Range (F)	0,5 ~ 120
Capacitance Tolerance (25°C)	+30/-10%

The usage at lower temperatures than indicated may be possible. Please contact the Jianghai Europe sales office for approval.

Leakage Current	After 72 hours at 25°C application of rated voltage, leakage current is not more than specified in table.		
Self Discharge Voltage	After 72 hours storage at 25°C, 25~85% RH and initial charging at U_R, the remaining voltage shall be ⩾ 2,1V		
Temperature Characteristics	The specification shall be met at **upper** category temperature of 70°C	Capacitance Change	±10% of specified value
		ESR Change	less than specified value
	The specification shall be met at **lower** category temperature of -40°C	Capacitance Change	±30% of specified value
		ESR Change	less than 400% of specified value
Load Life	The specification shall be met after rated voltage applied at 70°C for 1 000h	Capacitance Change	±30% of specified value
		ESR Change	less than 200% of specified value
Cycle Life	The specification shall be met after 500 000 cycles at 25°C; 1 cycle=charge-discharge from U_R to ½U_R	Capacitance Change	±30% of specified value
		ESR Change	less than 200% of specified value

ENVIRONMENTAL

The products are RoHS, WEEE and REACh compliant. The detailed version please see separate "Environmental Certificates" document or www.jianghai-europe.com



SPECIFICATIONS

U_R Rated Voltage (Surge Voltage) Code (V)	C_R Rated Capacitance (F)	$ESR_{DC,max}$ Equivalent Series Resistance 25°C (mΩ)	$ESR_{AC,max}$ Equivalent Series Resistance 25°C (1kHz) (mΩ)	I_{leak} Leakage Current 25°C (72h) (µA)	I_R* Rated Current (A)	I_{MAX} Max. Continous Current ΔT15°C (A)	I_S Surge Current <1sec (A)	Size mm DxL	Order Code Details: Page 4 ◊◊ = pin style & length
2,7 (2,85) 2R7	0,5	900	450	5	0,015	0,30	0,47	5 x 12	SCCDPR2R7504Q◊◊200512EE3
	1	700	350	6	0,030	0,40	0,79	6,3 x 12	SCCDPR2R7105Q◊◊250612EE3
		400	200	8	0,030	0,50	0,80	8 x 14	SCCDPR2R7105Q◊◊350814EE3
	2	240	120	10	0,060	0,60	1,82	8 x 14	SCCDPR2R7205Q◊◊350814EE3
	3	150	75	12	0,090	0,70	2,79	8 x 20	SCCDPR2R7305Q◊◊350820EE3
	3,3	150	75	14	0,099	0,90	2,98	8 x 20	SCCDPR2R7335Q◊◊350820EE3
	5	120	60	16	0,150	1,20	4,09	10 x 20	SCCDPR2R7505Q◊◊501020EE3
	7	110	55	20	0,210	1,80	5,34	10 x 25	SCCDPR2R7705Q◊◊501025EE3
	10	80	40	30	0,300	2,30	7,50	10 x 30	SCCDPR2R7106Q◊◊501030EE3
		80	40	30	0,300	2,30	7,50	12,5 x 25	SCCDPR2R7106Q◊◊501225EE3
	15	60	30	45	0,450	2,50	10,66	12,5 x 25	SCCDPR2R7156Q◊◊501225EE3
	20	50	25	60	0,600	2,60	13,50	16 x 20	SCCDPR2R7206Q◊◊751620EE3
	25	44	22	80	0,750	2,80	16,07	16 x 25	SCCDPR2R7256Q◊◊751625EE3
	50	32	16	140	1,500	5,50	25,96	18 x 40	SCCDPR2R7506Q◊◊751840EE3
	60	32	16	140	1,800	5,80	27,74	18 x 40	SCCDPR2R7606Q◊◊751840EE3
	70	36	18	160	2,100	6,30	26,85	18 x 50	SCCDPR2R7706Q◊◊751850EE3
	100	32	16	180	3,000	6,60	32,14	18 x 60	SCCDPR2R7107Q◊◊751860EE3
		32	16	300	3,000	6,60	32,14	22 x 45	SCCDPR2R7107Q◊◊102245EE3
	120	32	16	400	3,600	6,80	33,47	22 x 45	SCCDPR2R7127Q◊◊102245EE3

* Rated current $I_R = 40°I_A = 40°C_R°U_R/3600$ (IEC 62391-1)

ENERGY STORAGE

U_R Rated Voltage (Surge Voltage) Code (V)	C_R Rated Capacitance (F)	E Stored Energy (Wh)	Weight (g)	Specific Energy Density (Wh/kg)	Power Density (IPM) (kW/kg)	Order Code Details: Page 4 ◊◊ = pin style & length
2,7 (2,85) 2R7	0,5	<0,001	0,4	1,27	5,06	SCCDPR2R7504Q◊◊200512EE3
	1	0,001	0,66	1,53	3,94	SCCDPR2R7105Q◊◊250612EE3
		0,001	0,9	1,13	2,53	SCCDPR2R7105Q◊◊350814EE3
	2	0,002	1,0	2,03	7,59	SCCDPR2R7205Q◊◊350814EE3
	3	0,003	1,4	2,17	8,68	SCCDPR2R7305Q◊◊350820EE3
	3,3	0,003	1,5	2,23	8,10	SCCDPR2R7335Q◊◊350820EE3
	5	0,005	2,1	2,41	6,68	SCCDPR2R7505Q◊◊501020EE3
	7	0,007	2,7	2,63	6,14	SCCDPR2R7705Q◊◊501025EE3
	10	0,010	3,2	3,16	7,12	SCCDPR2R7106Q◊◊501030EE3
		0,010	3,6	2,81	6,33	SCCDPR2R7106Q◊◊501225EE3
	15	0,015	4,3	3,53	7,06	SCCDPR2R7156Q◊◊501225EE3
	20	0,020	5,9	3,43	6,18	SCCDPR2R7206Q◊◊751620EE3
	25	0,025	7,4	3,42	5,60	SCCDPR2R7256Q◊◊751625EE3
	50	0,051	13,0	3,89	4,38	SCCDPR2R7506Q◊◊751840EE3
	60	0,061	13,6	4,47	4,19	SCCDPR2R7606Q◊◊751840EE3
	70	0,071	17,0	4,17	2,98	SCCDPR2R7706Q◊◊751850EE3
	100	0,101	19,0	5,33	3,00	SCCDPR2R7107Q◊◊751860EE3
		0,10125	22,5	4,5	2,53	SCCDPR2R7107Q◊◊102245EE3
	120	0,12150	23,0	5,4	2,53	SCCDPR2R7127Q◊◊102245EE3



ORDER CODE EDLC TYPE RADIAL SINGLE CELL

SC	C	D	ER	2R7	504	Q	LL	35	1860	E	E3	JExxxxx
Technology	Design Code	Energy-Capacitor Type	Series Code	Rated Volt-age Code	Capacitance Code (in F)	Capacitance Tolerance Code	Lead Form Code	Pitch	Dimension øD x h (in mm)	Material Code Sleeve	for internal use	for Specials only
SC = Energy-Capacitor	Single Cell **C**	EDLC **D**	SRE **ER** SRP **PR** SRQ **QR**	2,7 **2R7** 3,0 **3R0**	0,5 **504** 1,0 **105** 3,3 **335** 10 **106** 50 **506** 100 **107** 120 **127** 220 **227**	+30% / -10% **Q** +20% / -20% **M** +20% / -0% **R**	Long Leads **LL** Taped **FF** Cut 4,5mm **CC** other style on request	2,0mm **20** 2,5mm **25** 3,5mm **35** 5,0mm **50** 7,5mm **75** 10,0mm **10**	5x12 **0512** 6x12 **0612** 8x14 **0814** 8x20 **0820** 10x16 **1016** 10x20 **1020** 10x25 **1025** 10x30 **1030** 12,5x25 **1225** 16x20 **1620** 16x25 **1625** 16x50 **1650** 18x40 **1840** 18x50 **1850** 18x60 **1860** 22x45 **2245** 22x55 **2255**	PET **E** PVC **V**	E3	

SINGLE CELL

DIMENSIONS FOR LOOSE, LONG-LEAD TYPE (BULK)

· ORDER CODE: LL

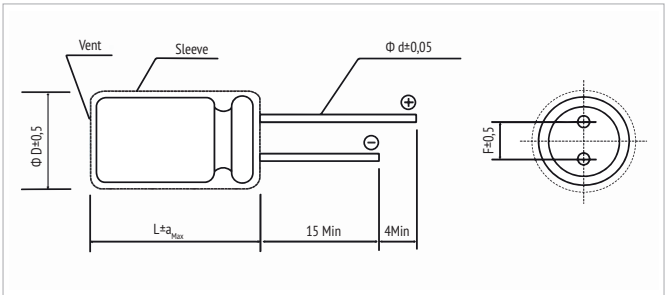

Ø D	5	6,3	8	10	12,5	16	18	22
F	2,0	2,5	3,5	5,0		7,5		10
Ø d	0,5		0,6			0,8		1,0
a_{Max}	2,0							3,5

in mm

DIMENSIONS FOR LOOSE, SHORT CUT LEADS (BULK) EDLC ONLY

· ORDER CODE: CC

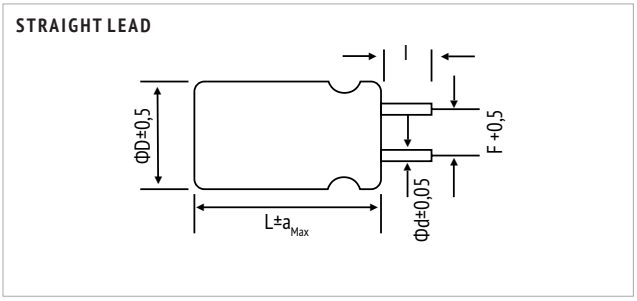

Code	CC
l	4,5 ± 0,5

Other length on request.

in mm

DIMENSIONS FOR AMMOPACK TAPING FOR ELECTROLYTIC CAPACITORS (EDLC ONLY)

· ORDER CODE: FF (FD)

Fig 1

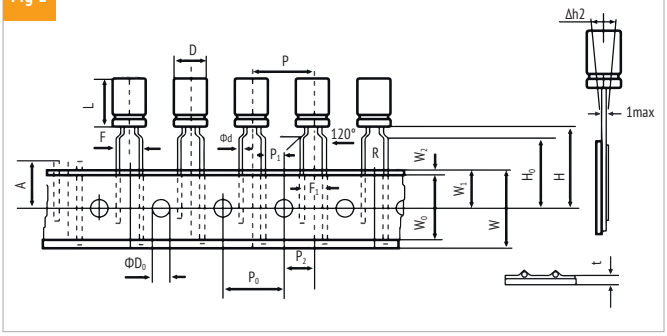

Fig 2

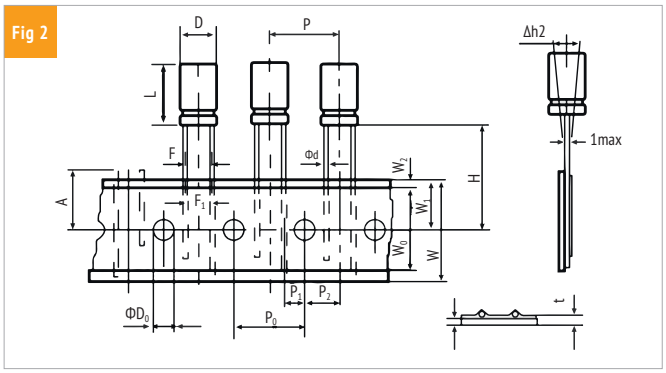

Fig 3

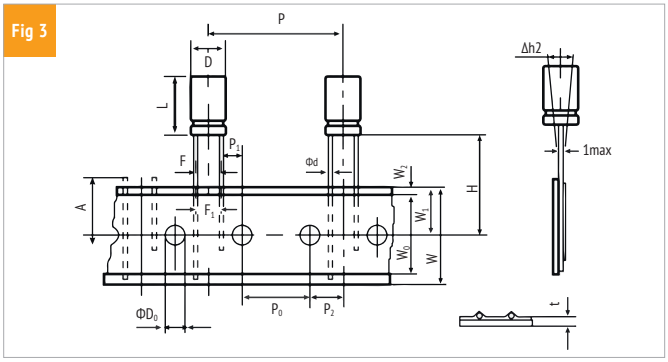

ITEM	D	L	Ød	P	P_0	P_1	P_2	F	F_1	W	W_0	W_1	W_2	H	H_0	A	$ØD_0$	$Δh_2$	t	Fig.	Taping Code
Tol.	± 0,5	± 2,0	± 0,05	± 1,0	± 0,2	± 0,5	± 1,0	+ 0,8 - 0,2	± 1,0	± 0,5	min	± 0,5	max	+ 0,75 - 0,5	± 0,5	max	± 0,5	max	± 0,2		
Nominal	8	11,5~20	0,6	12,7	12,7	4,6	6,35	3,5	3,5	18,0	10,0	9,0	1,5	18,5	-	11,0	4,0	1,0	0,7	2	FF
						3,85		5	5					20,0	16,0					1	FF
	10	12,5~36	0,6	12,7	12,7	3,85	6,35	5	5	18,0	10,0	9,0	1,5	18,5	-	11,0	4,0	1,0	0,7	2	FF
	12,5	15~36	0,6	15	15	5,0	7,5	5	5	18,0	10,0	9,0	1,5	18,5	-	11,0	4,0	1,0	0,7	2	FF
				25,4	12,7	3,85	6,35													3	FD
	16	15~31,5	0,8	30	15	3,75	7,5	7,5	7,5	18,0	12,0	9,0	1,5	18,5	-	11,0	4,0	1,0	0,7	3	FD
	18	15~25,5	0,8	30	15	3,75	7,5	7,5	7,5	18,0	12,0	9,0	1,5	18,5	-	11,0	4,0	1,0	0,7	3	FD
	Other taping styles available on request.																				in mm

Other lead types available on request.



WARNING

JIANGHAI is not liable for any extent of possible injuries or damages to persons or things, of any kind, caused by the improper application of and/ or operating conditions harmful to Energy-Capacitors. Misapplications which may cause failures include, but are not limited to: operating current or peak current or voltage outside the specified range, operating voltage above surge voltage specified, temperature exposure outside of the specified operating temperature range. Examples of harmful operating conditions comprise, but are not limited to: unusual storage or transport temperatures, excessive and/or rapid changes of ambient temperature or humidity, heavy mechanical shock or vibration, corrosive and abrasive particles in the ambient (cooling) air, conducting dust in the ambient (cooling) air, oil or water vapor or corrosive substances, explosive gas or dust, operation under extremely high or low ambient pressure conditions (below or above sea level), superimposed radio frequency voltages, radioactivity. In case of doubt about the impact of operating conditions on capacitor performance, please contact JIANGHAI. Personal safety Electrical or mechanical misapplication of Energy-Capacitors may be hazardous. Personal injury or property damage may result from explosion of a capacitor or from the expulsion of electrolyte due to mechanical disruption or the release of a safety vent of a capacitor. In case of injury or skin or eye exposure to electrolyte, immediately seek professional medical advice. Before using Energy-Capacitors in any application, please read these Handling Precautions, familiarizing thoroughly with the information contained herein. Please check before using any of our Energy-Capacitors if these components fulfill the requirements of your application and that warnings and instructions for use are followed.

WARRANTY

The information contained in this datasheet does neither form part of any quotation nor of a contract, it is believed to be accurate, reliable and up to date. Quality data are based on the statistical evaluations of a large quantity of parts and do not constitute a guarantee in a legal sense. However, agreement on these specifications does mean that the customer may claim for replacement of individual defective capacitors within the terms of delivery. We cannot assume any liability beyond the replacement of defective components. This applies in particular to any further consequences of component failure. Furthermore it must be taken into consideration that the figures stated for lifetime, failure rates and outlier percentages refer to the average production status and are therefore to be understood as mean values (statistical expectations) for a large number of delivery lots of identical capacitors. These figures are based on application experience and data obtained from preceding tests under normal conditions, or – for purpose of accelerated aging – more severe conditions. JIANGHAI reserves the right to change these specifications without prior notice. Any application information given is advisory and does not form part of any specification. The products are not primarily designed for use in life supporting applications, devices or systems where malfunction of these products can reasonably be expected to result in personal injury. JIANGHAI customers using or selling these products for use in such applications without prior written consent of JIANGHAI do so at their own risk and agree fully to indemnify JIANGHAI for any damage resulting from such improper use or sale. This version of the datasheet supersedes all previous versions.

HANDLING GUIDELINES

(1) Energy-Capacitors must not be used in AC and filtering circuits.

(2) The actual operating voltage must not exceed the max. specified operating voltage and it must not fall below the min. specified operating voltage.

(3) Please check the polarity before using. If operated under reverse polarity conditions, the capacitors will not only suffer from a shortened life time, but they may even swell, and electrolyte leakage or other malfunctions may result.

(4) Environment: The operating temperature has an influence on the life time of the capacitors, and the maximum specified operating temperature must never be exceeded.

(5) Current drain during discharge needs to be controlled to avoid a voltage drop below the min. voltage of the capacitor. The permissible current drain I_R is usually specified in the datasheet.

(6) Capacitors in series connection: when capacitors are connected in series connection it must be ensured that the operating voltage of any single capacitor does not exceed to the limit of the max. and min. operating voltages. Systems for balancing and monitoring as well as modules are available on request. Please contact the JIANGHAI EUROPE Sales office for further Information.

(7) Energy-Capacitors must not be short-circuited. Discharge below the minimum voltage will destroy the capacitor.

PRECAUTIONS

(1) Prohibition of disassembly

Any attempt to disassemble the capacitor may result in short circuits to the capacitor, which may generate gas, and may cause electrolyte leakage, explosion or other problems.

(2) Prohibition of dumping capacitors into fire to avoid potential risk of explosion.

(3) Prohibition of immersing capacitors into water or seawater or any similar liquid.

(4) Prohibition of using damaged capacitors: If any abnormal features of the capacitors are found (especially such as damages of the package, electrolyte leakage or others) the capacitor cannot be used anymore and must be stored away from open flames.

(5) Prohibition of short-circuit or use outside the specified operating voltage range.

(6) Prohibition of reverse voltage.

PRECAUTIONS FOR DEVICES USING ENERGY-CAPACITORS

The operating conditions for modules, devices or application using Energy-Capacitors must follow the detailed operating condition of the individual cell.

OPERATING VOLTAGE (U_R)

Energy-Capacitors are specified with a maximum operating voltage U_{MAX}= U_R and a minimum operating voltage Umin. For a safe operation, these limits must be strictly adhered to.

SURGE VOLTAGE

Maximum voltage, which may be applied to the capacitor for a short period of maximum 5 seconds within the complete lifetime.

EFFECT OF CURRENT FLOW

Energy-Capacitor used with large currents will generate heat. Do not apply currents exceeding the maximum charge/discharge current. It

may generate heat, deform, explode or lose electrolyte. Comply with the maximum specified charge/discharge currents in the datasheet.

RATED CURRENT (I_R)

The rated current is the current which is specified in the IEC 62391-1.

MAX. CONTINUOUS CURRENT (I_{MAX})

The maximum continuous current is the current which can be used to charge and discharge the capacitor repeatedly without any pause. The current generates a temperature increase and must be considered with existing outside temperature. The maximum temperature must not be exceeded.

SURGE CURRENT (I_S)

The surge current is the maximum charge/discharge current and it is limited (see datasheet). The maximum temperature must not be exceeded.

SELF-DISCHARGE CURRENT (I_{SD})

The self-discharge current is specified after 3 months at ambient temperature of 25°C, relative humidity between 25% to 85% and without further voltage applied with t in seconds.

$$I_{SD} = \frac{C \cdot (U_R - U_3)}{t}$$

SELF-DISCHARGE VOLTAGE (I_{SD})

The self-discharge voltage is specified at ambient temperature 25±2°C. The following procedure must be followed to determine the self-discharge voltage drop:

(a) the capacitor is charged to rated voltage with constant current (operational current, see datasheet)

(b) the capacitor is kept at the rated voltage for 30 minutes

(c) open the circuit and store the capacitor for 72 hours at an ambient temperature of 25±2°C

(d) measure the self-discharge voltage between the capacitor terminals with a high ohmic voltmeter.

LEAKAGE CURRENT (I_{leak}) The leakage current is specified at ambient temperature 25±2°C. The following procedure must be followed to determine the leakage current:

(a) the capacitor is charged to rated voltage with constant current (operational current, see datasheet)

(b) the capacitor is kept at the rated voltage for 72 hours, during which the leakage current declines to a steady-state value

(d) measure the leakage current between the capacitor terminals for the characteristic leakage current

POLARITY

The terminals of the product have a (positive or negative) polarity mark. Please check the polarity before using. Never apply any reverse voltage.

LIFETIME There are many different lifetime definitions known without any true standard definition. Take special care when capacitors of different manufacturers or technologies are compared. In the case of lifetime tests, please consider the rated operating voltage and rated operating temperature. Do not exceed the rated operating current.

LOAD LIFE

Period of time, during which the technical parameters of all capacitors stay within the given limits. JIANGHAI does not allow for outliers.

HIGH TEMPERATURE STORAGE TIME

Period of time, during which the technical parameters of all capacitors stay within the given limits. JIANGHAI does not allow for outliers.

CYCLE LIFE

Number of charge and discharge cycles at ambient temperature 25°C during which the technical parameters of all capacitors stay within the given current limits and voltage range. JIANGHAI defines this without allowing for outliers.

TEMPERATURE CHARACTERISTICS

The parameters of the capacitor are dependent of the temperature. Please check the datasheet or ask for assistance to define the temperature dependencies.

AC INTERNAL RESISTANCE (ESR_{AC})

Please note that the capacitor must not be connected to alternating voltage during regular operation. The only exemption is the determination of the ESR_{AC}, by a test procedure devised to determine the ESR without charging the component. At ambient temperature 25±2°C the capacitor is discharged to U_{min} with constant current I_R before testing. A sinusoidal alternating current signal with an amplitude of maximum 5 mA and a frequency of 1kHz is applied, then the decreasing alternating voltage at the capacitor is detected. The AC internal resistance of the capacitor is calculated according to the following formula:

$$ESR_{AC} = \frac{V_{AC}}{I_{AC}}$$

DC INTERNAL RESISTANCE (ESR_{DC})

At ambient temperature 25±2 °C, the DC internal resistance of a capacitor is evaluated by following these steps:

(a) the capacitor is charged to the rated voltage U_R with constant current I_R

(b) the capacitor is kept at the rated voltage U_R for 30 minutes

(c) the capacitor is discharged to the minimum operating voltage Umin with a constant current I_R, measure the voltage U_i after 30ms discharge

(d) repeat the steps for three times from (a) to (c)

(e) calculate the DC internal resistance of capacitor (RDC) within the third cycle according to the following formula:

$$ESR_{DC} = \frac{(U_R - U_i)}{I}$$

VIBRATION AND MECHANICAL STRESS

Capacitors are sensitive to vibration and mechanical forces applied on the leads. Do not use capacitors, which have been dropped onto a rigid surface.

INSULATION

If any defect of the sleeve is visible, the component should not be used – the same holds for any kind of visible damage. A capacitor should be electrically isolated from the following parts: aluminum case, cathode lead wire, anode lead wire and circuit pattern, and auxiliary terminal of snap-in type. The sleeve of the capacitor is not an insulator and therefore the standard capacitor should not be used in a place where insulation function is needed. Please contact JIANGHAI if a higher grade of insulation is required.

ELECTROLYTE AND SEPARATOR PAPER

Electrolyte and separator paper used in Energy-Capacitors may be flammable. Also electrolyte is electrically conductive. Therefore in case electrolyte gets in contact with PC board it may cause corrosion of circuit pattern or cause short circuit between patterns, and may lead to smoke generation or ignition in worst case.



CAUTION DURING USE OF CAPACITORS

Do not touch the terminals of capacitors. Keep the capacitor free from conductive solution, such as acids, alkali and so on. Ensure that the operating environment of the equipment into which the capacitor has been built is within the specified conditions mentioned in the catalogue or specification sheets.

SAFETY VENT (RADIAL AND SNAP-IN)

The safety vent needs some free space to open properly. Allow free headroom of at least 2mm for diameter ≤16mm, more than 3mm for diameter 18-35mm. Do not place any wires or PCB tracks above the valve.

SOLDERING

Please only use manual soldering. Don't use reflow soldering or wave-soldering or infrared heating or air heating. Heat shock will decrease the electric performance of capacitors or cause malfunction.

(1) Soldering temperature for radial and snap-in types should not exceed 260°C and soldering time not exceed 5s.

(2) Soldering temperature for pouch bag types should not exceed 420°C and soldering time not exceed 10s.

(3) One solder once (1 cycle).

Take measure at prevent Energy-Capacitors becoming short-circuited during the soldering process.

GLUEING, CLEANING AND COATING

Do not use fixing agents or cleaning substances containing halogens. Do not use coating and moulding components that completely seal the capacitors from the environment. Also never use solvents containing: Halogenated hydrocarbons, alkali, petroleum, trichloroethylene/-ethane, xylene, acetones, trichloro trifluoroethane, tetrachloroethylene, methylene chloride, chloroform, acetates, ketones, esters, chlorides and bromides.

MOUNTING

Other devices, which are mounted near the capacitor, should not touch the capacitor. Heat transferred from other components to the capacitor may reduce the lifetime of the capacitor. Do never bend or twist the capacitor after soldering to avoid stress on the leads. Radial capacitors are not protected against mechanical forces on the leads. Forces on the pins might damage the capacitor. No printed circuit board tracks are allowed between the lead pads of the capacitor.

TRANSPORTATION

(1) Do not apply excessive vibration or shock when transporting the product.

(2) Prevent the packaging from being dropped during transportation or being stabbed by fork, lift forks etc. during freight handling.

(3) Package the product with individual terminals isolated to prevent short-circuits between them.

(4) Do not allow the product to get wet from, for example, rainwater, seawater, ice and snow, dew condensation, or freezing during transportation.

(5) Package the product in materials strong enough to prevent damage from stacking.

(6) Avoid fumigation and spraying insecticides (especially with bromides) in the import or export procedures which can cause corrosion. This applies also to the finished devices.

STORAGE CONDITIONS FOR LITHIUM-ION-CAPACITORS

When storing the product for a long period of time, pack it in a way that stacking does not damage the product, taking care to preserve the isolation between individual terminals to prevent a short circuit between them.

(1) temperature 0°C to 35°C and relative humidity below 65%

(2) storage voltage 3,4V to 3,7V

(3) storage time above 1 year should be avoided

STORAGE CONDITIONS OF ELECTROLYTIC-DOUBLE-LAYER-CAPACITORS

When storing the product for a long period of time, pack it in a way that stacking does not damage the product, taking care to preserve the isolation between individual terminals to prevent a short circuit between them.

(1) temperature 15°C to 35°C and relative humidity below 65%

(2) uncharged state (Voltage:0~0,3V)

(3) storage time above 4 year should be avoided0

MAINTENANCE

Periodical inspection should be carried out for the capacitor: visual inspection to check pressure relief open or leakage of electrolyte, electrical characteristic as self-discharge current and capacitance.

AIR TRANSPORTATION REGULATIONS

Currently, Energy-Capacitors are not considered as dangerous goods in 2015IATA Regulations (status as of January 1st, 2019). However, as air transportation regulations may change, it is recommended that you should check the regulations each time you are transporting Lithium-Ion Capacitors and use an appropriate transportation method.

IN CASE OF EMERGENCY

(1) If the capacitor becomes deformed or damaged, stop using it and replace it immediately.

(2) If the cell starts leaking electrolyte or released gas and smoke, stop using it and replace it immediately. Keep away from open flames or sources of ignition. Leaked electrolyte might cause short circuits on the PCB.

EMERGENCY ACTIONS

When the pressure relief vent is open and some gas blows out from the capacitor, please turn the main switch of the equipment off or pull out the plug from the power outlet immediately. During safety vent operation, extremely hot gas (>100°C) may blow out of the capacitors. Do not stand close to the capacitors. In case of eye contact, rinse the open eye(s) with clean water immediately. In case of ingestion, gargle with water immediately, do not swallow. In the case of innervation please exposed to fresh air. Do not touch electrolyte but wash skin with soap and water in case of skin contact. In the case of an accident with electrolyte, please consult a doctor.

DISPOSAL

Following the rules of WEEE, Energy-Capacitors must be collected separately as electronic waste.

Jianghai Europe Electronic Components
2025v1

EDLC

The EDLC technology builds the basis of both types, which offers a relatively high energy density and a very high power density. The electrode material (activated carbon) is applied to an electrically contactable collector and forms the electrodes of the capacitors.

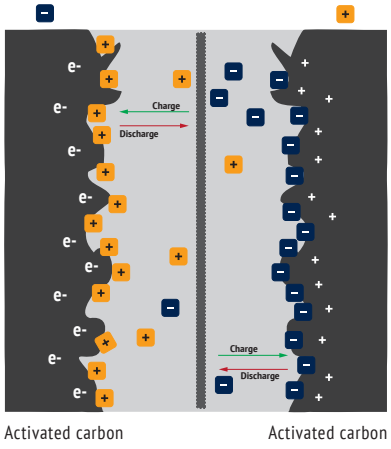

Fig. 1: Electrode structure of EDLC

A membrane („separator"), separates the electrodes from each other and thus protects them from short circuits. The separator must be permeable to the ions of the electrolyte. Those ions are the carriers of the electrical current in the EDLC (Fig. 1). If a voltage is applied, the positively and negatively charged ions migrate to the electrodes. The ions collect at the phase boundaries of the solid electrodes to the liquid electrolyte and form the so-

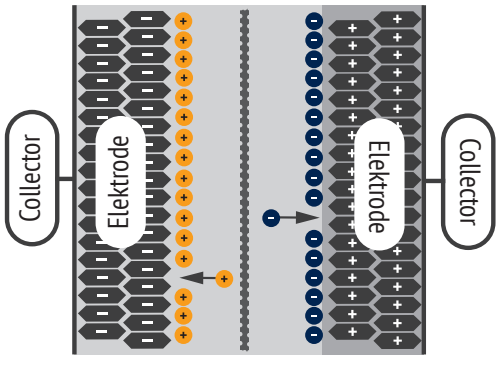

Fig. 2: Charged EDLC

called double layer. The resulting electric field polarizes solvent molecules between the layers that separate the charges. The two electrodes connected in series work like a series connection of two capacitors (Fig. 2). Due to the very small distances of the double layer and the large surface, the capacitance of an EDLC is very high.

LiC

The modified design of the Lithium-Ion-Capacitors (Li-C) allows significantly increased energy density. A lithium-doped graphite electrode replaces one of the two symmetrical electrodes. As a consequence power densities are a little reduced compared to

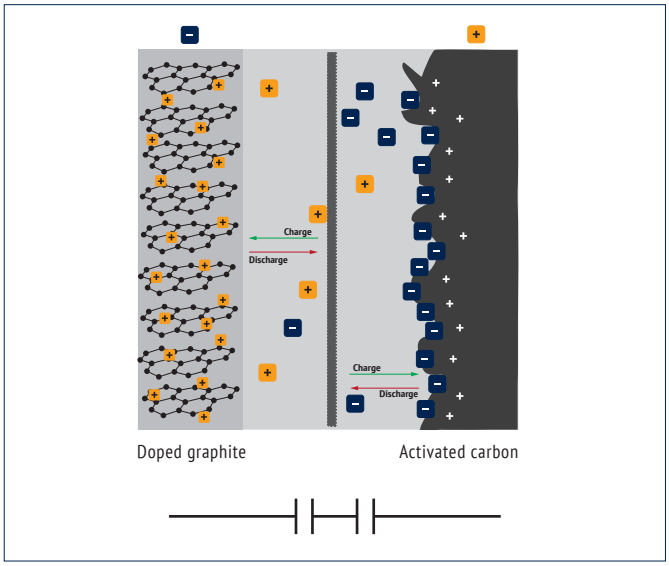

Fig. 3: Electrode structure of LiC

EDLC. Fig. (3) shows the inner construction of a Li-C: activated carbon like EDLC on one side and a doped graphite electrode on the other. As a result, Li-Cs approach the energy density close to batteries.

>> Energy storage is an integral part of our modern world and one of the challenges of the future. The technology called „Energy Capacitors“ provides the energy storage in capacitors with new boost. The Ragone diagram (Fig. 4) shows the power density of various electrical energy storage devices versus their energy density. The Energy-C concept basically uses two types of capacitors: the classic double-layer capacitor (EDLC) and the novel lithium-ion capacitor (LiC).

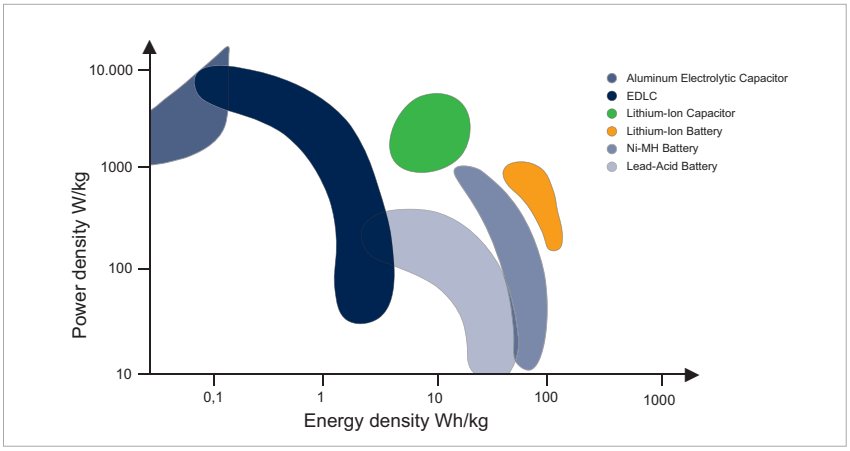

Fig. 4: Ragone diagram of various storage devices for electrical energy

In terms of cycle stability and lifetime, the Energy-Cs are far ahead of the batteries. While lithium ion batteries offer merely about a thousand cycles, LiCs reach several hundreds of thousands of cycles. The special design and material combination of the lithium-ion capacitor ensures stability and charge retention even at high temperatures.

While both batteries and Li-C remain stable at room temperature and discharge less than 5% over 2500 h, an EDLC already loses up to 30% of the charge after 2000h. At 60°C, the discharge rate increases significantly due to the accelerated chemical reactions between electrolyte and electrode material. The consequence of these chemical reactions is an increased leakage current and this leads to charge loss in batteries and EDLCs alike.

While the leakage currents of the Li-C continue to be low, the lithium-ion battery now loses up to 30% of its charge after 2500 hours. When it comes to safety and reliability, the Li-C can also score: it is just as safe as an EDLC, due to the special process that firmly embeds the lithium ions in the molecular structure of the carbon structure („doping“).

Unlike lithium batteries, no elaborate designs are needed to reduce the risk of thermal runaway with the known fire hazard. Due to the doping, there are neither metallic lithium nor lithium oxide in the capacitor. The doping method thus allows the capacitor to be always in a safe condition even with mechanical damage, high temperature, or heavy discharge.

The production of a LiC requires less than 3% of the lithium amount of a lithium battery of the same volume. In addition to the aspect of efficiency of resources, this results in a lower weight / smaller design as a nice side effect. The Ragone diagram (Fig. 4) shows that lithium-ion capacitors open up a new range for applications that previously were not covered, neither by batteries nor by any other type of capacitor.

The Energy-C concept represents a new technology for existing and future applications of energy storage. The capacitors described here are already being mass produced by Jianghai and have proven their superior performance under real operating conditions in the field.

TECHNOLOGY COMPARISON: MAIN MATERIAL & PROPERTIES

	ENERGY-C (EDLC)	ENERGY-C (LiC)	LiB
ANODE	Activated carbon	Activated carbon	LiCoO2 / LiMnO4
CATHODE	Activated carbon	Graphite/Li-ion doped	Graphite/Li-ion doped
ELECTRIC STORAGE PRINCIPLE	Ion-adsorption	"Anode: Ion-adsorption Cathode: Ion-adsorption and charge transfer"	Reversible redox reaction
TEMPERATURE RANGE	-40 ~ 85 °C	-25 ~ 70 °C	-25 ~ 45 °C
MAX. RATED VOLTAGE	2.3 ~ 3 V	3.8 ~ 4.2 V	3.7 ~ 4.2 V
MAX. CHARGE RATE	approx. 1,000 C	approx. 100 C	0.5 ~ 1 C (normal)
SIZE/WEIGHT	low	low	high
CHARGE-/DISCHARGE-CYCLES	More than 500,000	50,000 ~ 500,000	1000
SELF DISCHARGE	>30 % after 2,000 h	<5 % after 2,500 h	<5 % after 2,500 h
SAFETY	safe	safe	depending on structure and material
ENERGY DENSITY	(5 ~ 8,5 Wh/kg)	(40 ~ 90 Wh/kg)	(~150-250 Wh/kg)









Traction and Railway, tram and electrified bus

Several functions could be realized by using Energy-C capacitors: reuse the power of braking, cost reductions by saving parts of the external electrification (overhead lines) and infrastructure. Fast charging during the stop and pick-up of passengers instead of a continously connection to the grid are new concepts already in practice.



Elevators

Elevators often waste potential energy when the cabin goes down. Energy capacitors can be used to store the energy and use it for the next ascent. Such operation requires a high number of cycles combined with high charging- and discharging currents.



Automated Guided Vehicles

Automated Guided Vehicles automate and mobilize complete warehouses. Energy capacitors replacing batteries reduce the weight and volume significantly. The disadvantages of high maintenance costs and short service life of batteries is obsolete. Short stops during usage are used for charging the capacitors and allow a true 24-hour operation of all AGVs.





Recuperation of energy

Recuperation brakes in electric vehicles, in trains, in roller coasters or in machines like f.i. the fork of a forklift save energy and prolongs the life and usage time of the machine. There are thousands of applications with high numbers of charge-discharge cycles, which now can be used to increase the effienciency or allow a true energy saving. Additionally the life time of the batterie might be prolonged as the numbers of cycles for the battery are reduced.



Pitch Systems in Wind Turbines

Energy-Capacitors help to minimize costs due to their long service life and high cycle stability on this important safety unction.







Smartmeters & Energy Harvesting

Energy capacitors provide the energy for the short but intense transmission pulse. The Li-C, which has a much lower self-discharge than all other known technologies allow a true long-time handling even at high temperatures.



Backup systems

Energy-Cs allow extreme fast power in case of problems of the grid or power supplies, especially for larger power systems like hospitals, banks or industry. Such grid failures happen quite often in the range of milliseconds or seconds. The high number of cycles and the availability of large amounts of energy in a short time make energy capacitors the optimal technology choice.