TIANGXI COMPONENTS

16mm common drawing

Model No. TX1610N-xA1- taper value

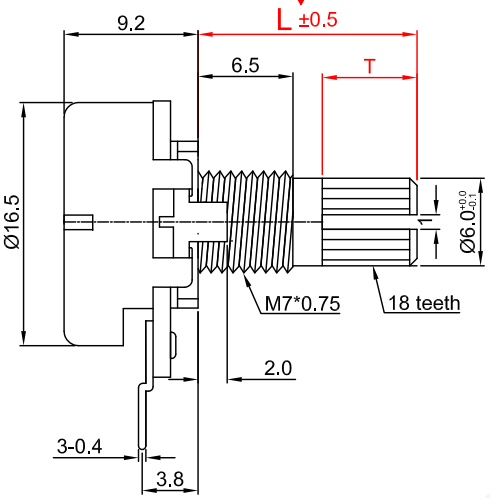

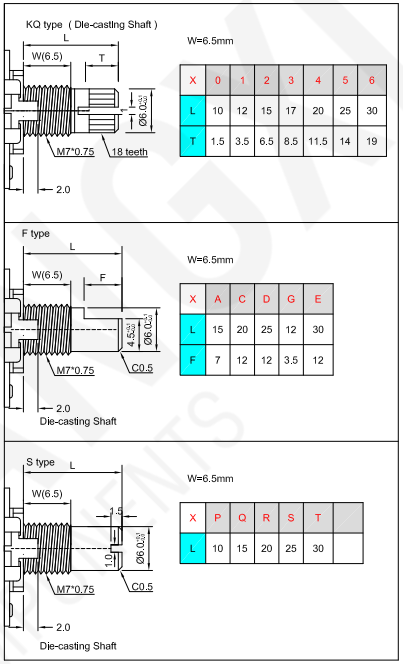

X	0	1	2	3	4	5	6
L	10	12	15	17	20	25	30
T	1.5	3.5	6.5	8.5	11.5	14	19

X	A	C	D	G	E
L	15	20	25	12	30
F	7	12	12	3.5	12

X	P	Q	R	S	T	
L	10	15	20	25	30	

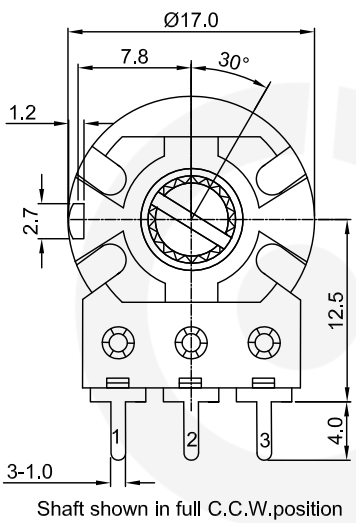

Shaft shown in full C.C.W.position

接 线 图
Circuit explanation

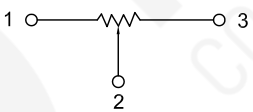

安装孔位置图
P.C.B. mounting hole detail

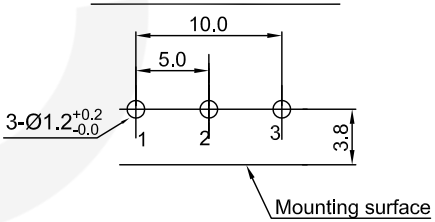

Attached parts : nut & washer

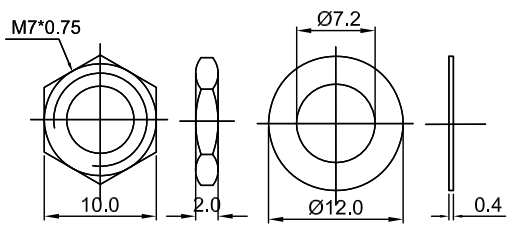

16 mm Rotary Potentiometers series Specifications

1.電氣性能 (Electrical Characteristics)		
1.1	全阻抗值 （Total Resistance)	1KΩ ~ 2MΩ
1.2	全阻抗值允许偏差（Total Resistance Tolerance)	±20%（More than 1 M Ω ±30%)
1.3	電阻隨温度變化特性 Resistance of temperature change character)	20℃-75℃:△R/R≤±5%, -25℃-20℃:△R/R≤±4.5%
1.4	阻值變化特性（Resistance Taper)	A, B , C, W
1.5	零位阻值（Residual Resistance)	R≥250KΩ / 0.1 % max. of total Value 250KΩ>R>10KΩ / 20Ω max. 10KΩ≥R / 10Ω max.
1.6	額定功率（Rated Power)	Linear Taper B: 0.2W Other Taper:0.1W
1.7	最高使用電壓（Max.Operating Voltage)	150V AC
1.8	動雜音（Rotational Noise)	Less Than 100mV
1.9	絕缘阻抗（Insulation Resistance)	More than 100MΩ at DC 500V
1.10	耐電壓（Withstand Voltage)	For 1 minute at: AC 500V
1.11	开关额定功率(Switch Rated Power)	----------
1.12	同步誤差（Gang Error)	----------
2.機械性能（Mechanical Characteristics)		
2.1	全回轉角度（Rotation Angle)	300°±10°
2.2	旋轉力矩（Rotation Torque)	20～200gf.cm
2.3	軸的拉、押強度（Pull-Push Strength)	6 Kgf.cm
2.4	轉動止檔強度（Rotational Stop-End Torque)	5 kgf.cm Min
2.5	开关角度(Switch Working Angel)	----------
2.6	开关力矩(Switch Working Torque)	----------
2.7	旋轉定位數目（Number of Detents(click)	detent: 0 ; 1; 11; 21; 31; 41
2.8	焊錫耐熱性（Resistance To Soldering Heat)	260±5℃and less than 3 seconds
3.耐久性能 (Durability)		
3.1	回轉壽命（Rotation Life)	10,000 Cycles min.
3.2	工作温度 (Operating temperature)	-10℃～+70℃
4.1	外形尺寸圖/曲線特性圖 (Shape size drawing/curve characteristic drawing)	见附页 Please refer the drawing