# BDH 20012

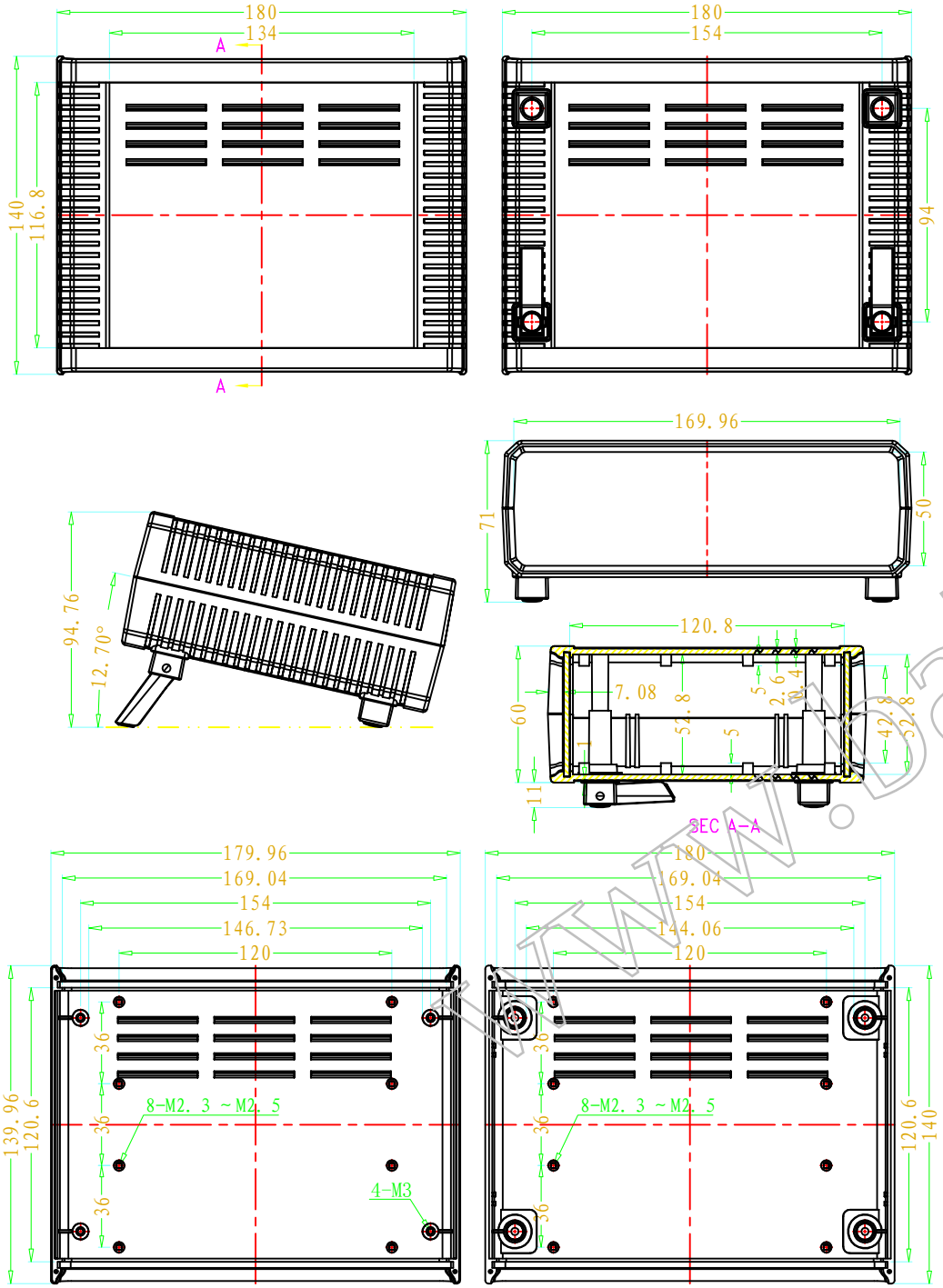


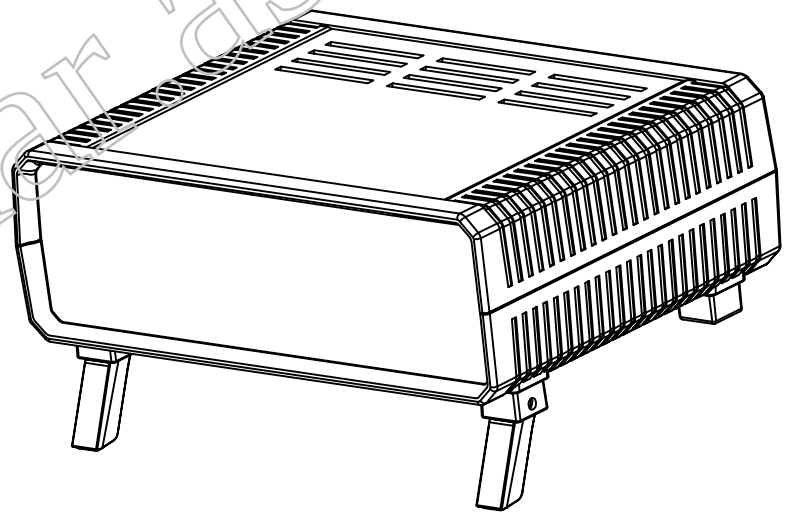

www.bahar.asia

BAHAR
WWW.BAHAR.ASIA

## Accessories

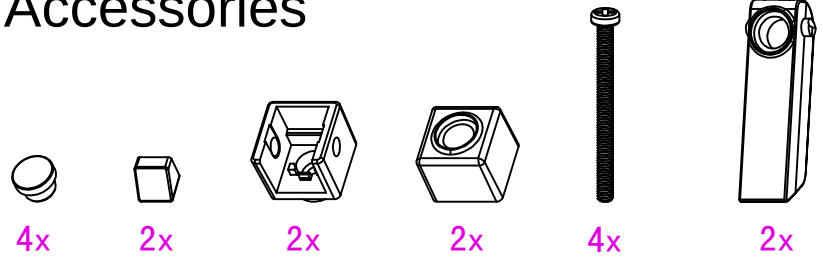


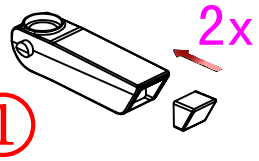


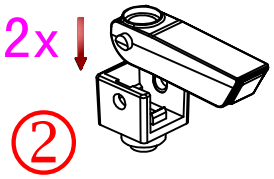


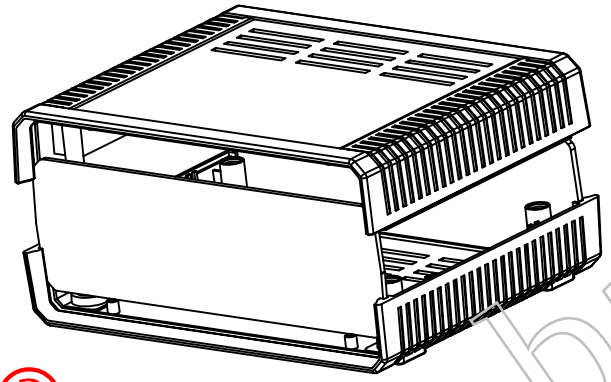


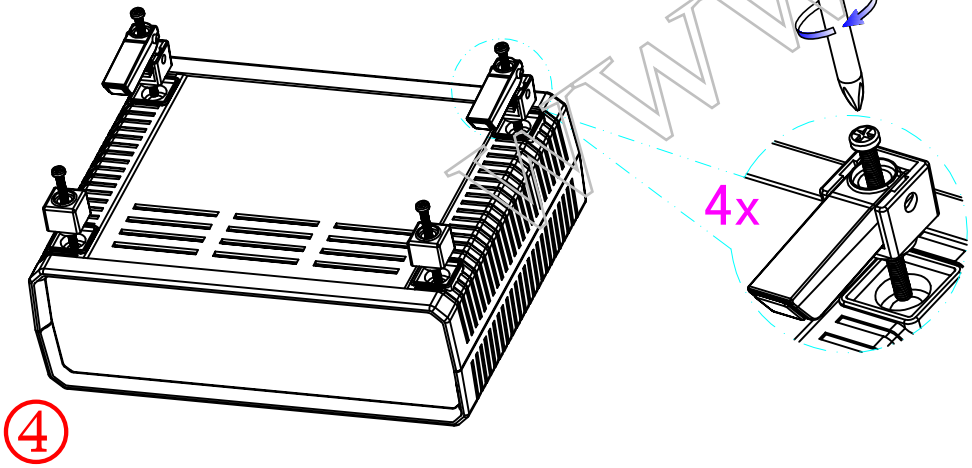


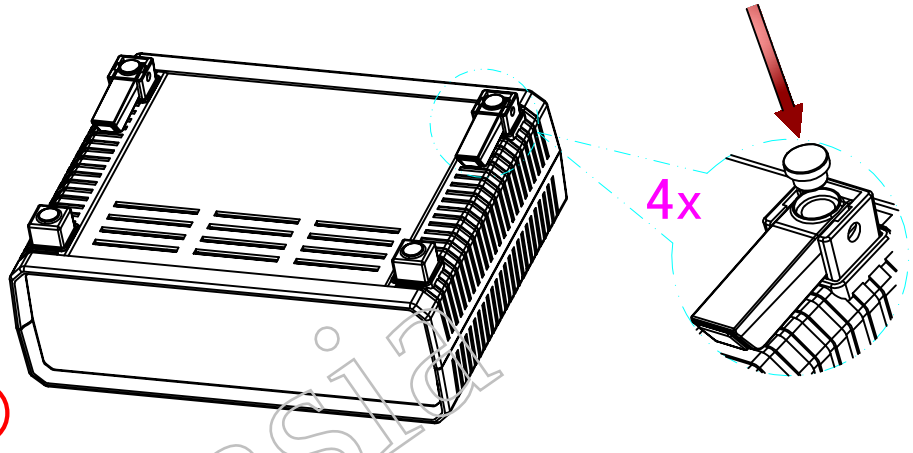


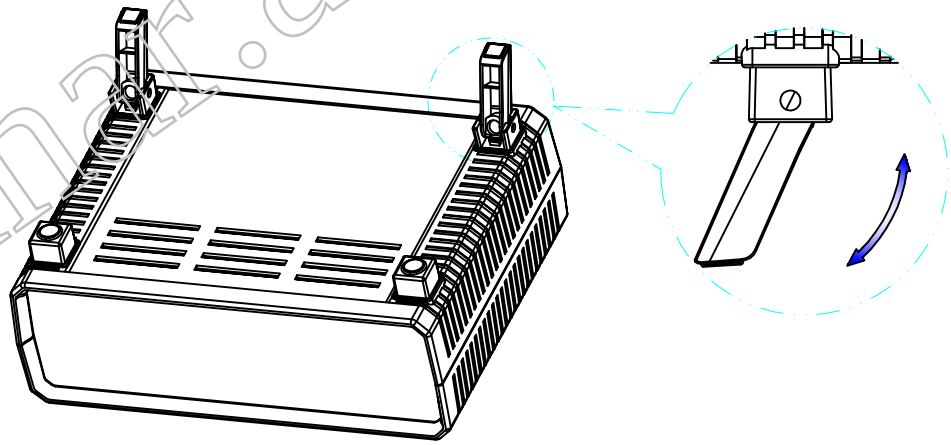

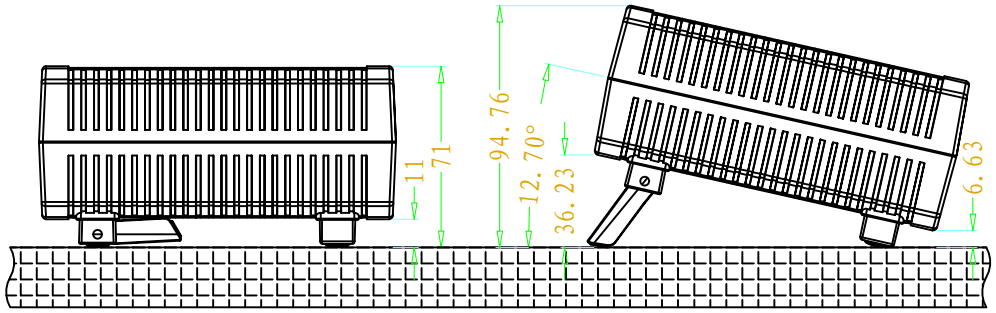


www.bahar.asia