TL06xx Low-Power JFET-Input Operational Amplifiers

1 Features

- Very low power consumption
- Typical supply current: 200 µA (per amplifier)
- Wide common-mode and differential voltage ranges
- Low input bias and offset currents
- Common-mode input voltage range includes V_{CC+}
- Output short-circuit protection
- High input impedance: JFET-input stage
- Internal frequency compensation
- Latch-up-free operation
- High slew rate: 3.5 V/µs typical
- On products compliant to MIL-PRF-38535, all parameters are tested unless otherwise noted. On all other products, production processing does not necessarily include testing of all parameters.

2 Applications

- Tablets
- White goods
- Personal electronics
- Computers

3 Description

The TL06x (TL061, TL062, and TL064) family of industry-standard operational amplifiers (op amps) mirror the TL07x and TL08x family of op amps with lower power consumption. These devices provide outstanding value for cost-sensitive applications, featuring high input impedance, wide bandwidth, high slew rate, and low input offset and input bias currents. High ESD (1.5 kV, HBM), integrated EMI and RF filters, and wide temperature operation enable the TL06x devices to be used in rugged and environmentally-demanding applications.

Device Information

PART NUMBER	CHANNEL COUNT	PACKAGE(1)	PACKAGE SIZE(2)
TL061x	Single	D (SOIC, 8)	4.90 mm × 6.00 mm
		P (PDIP, 8)	9.59 mm × 7.94 mm
		PS (SO, 8)	6.20 mm × 7.80 mm
TL062x	Dual	D (SOIC, 8)	4.90 mm × 6.00 mm
		P (PDIP, 8)	9.59 mm × 7.94 mm
		PS (SO, 8)	6.20 mm × 7.80 mm
		JG (CDIP, 8)	9.58 mm × 7.62 mm
		PW (TSSOP, 8)	3.00 mm × 6.40 mm
		FK (LCCC, 20)	8.89 mm × 8.80 mm
TL064x	Quad	D (SOIC, 14)	8.65 mm × 6.00 mm
		J (CDIP, 14)	19.4 mm × 7.90 mm
		N (PDIP, 14)	19.31 mm × 7.94 mm
		NS (SO, 14)	10.20 mm × 7.80 mm
		PW (TSSOP, 14)	5.00 mm × 6.40 mm
		W (CFP, 14)	21.78 mm × 9.21 mm
		FK (LCCC, 20)	8.89 mm × 8.80 mm

(1) For all available packages, see the orderable addendum at the end of the data sheet.
(2) The package size (length × width) is a nominal value and includes pins, where applicable.

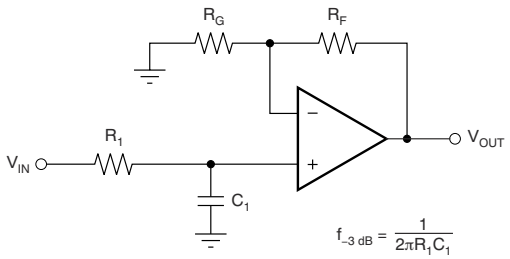

$$\frac{V_{OUT}}{V_{IN}} = \left(1 + \frac{R_F}{R_G}\right)\left(\frac{1}{1 + sR_1C_1}\right)$$

Single-Pole, Low-Pass Filter

An IMPORTANT NOTICE at the end of this data sheet addresses availability, warranty, changes, use in safety-critical applications, intellectual property matters and other important disclaimers. PRODUCTION DATA.

Table of Contents

1 Features....1
2 Applications....1
3 Description....1
4 Revision History....2
5 Pin Configuration and Functions....4
6 Specifications....6
6.1 Absolute Maximum Ratings....6
6.2 ESD Ratings....6
6.3 Recommended Operating Conditions....6
6.4 Thermal Information (TL061)....7
6.5 Thermal Information (TL062)....7
6.6 Thermal Information (TL064)....7
6.7 Electrical Characteristics for TL06xC and TL06xxC....8
6.8 Electrical Characteristics for TL06xxC and TL06xI....9
6.9 Electrical Characteristics for TL06xM....10
6.10 Operating Characteristics....10
Typical Characteristics....11
7 Parameter Measurement Information....14
8 Detailed Description....15
8.1 Overview....15
8.2 Functional Block Diagram....15
8.3 Feature Description....15
8.4 Device Functional Modes....15
9 Applications and Implementation....16
9.1 Application Information....16
9.2 Typical Applications....16
9.3 System Examples....17
9.4 Power Supply Recommendations....19
9.5 Layout....20
10 Device and Documentation Support....21
10.1 Documentation Support....21
10.2 Support Resources....21
10.3 Trademarks....21
10.4 Electrostatic Discharge Caution....21
10.5 Glossary....21
11 Mechanical, Packaging, and Orderable Information....21

4 Revision History

NOTE: Page numbers for previous revisions may differ from page numbers in the current version.

Changes from Revision M (June 2023) to Revision N (August 2023)	Page
• Added typical specification for Unity-Gain Bandwidth in *Electrical Characteristics for TL06xM*	10
• Changed Equivalent Input Noise Voltage vs Frequency curve in *Typical Characteristics* section	11

Changes from Revision L (May 2015) to Revision M (June 2023)	Page
• Updated the numbering format for tables, figures, and cross-references throughout the document	1
• Updated *Device Information* with package size and channel count, and reordered packages based on channel count	1
• Updated TL061 pinout diagram in *Pin Configuration and Functions*	4
• Changed Charged Device Model (CDM) ESD from 2 kV to 1.5 kV in *ESD Ratings*	6
• Added table note for input bias current and input offset current on *Electrical Characteristics for TL06xC and TL06xxC*	8
• Added table note for input bias current and input offset current on *Electrical Characteristics for TL06xxC and TL06xI*	9
• Changed name of *Electrical Characteristics for TL06xM and TL064M* to *Electrical Characteristics for TL06xM*	10
• Added table note for input bias current and input offset current on *Electrical Characteristics for TL06xM*	10
• Changed typical input voltage noise density at 1 kHz from 42 nV/$\sqrt{\text{Hz}}$ to 30 nV/$\sqrt{\text{Hz}}$	10
• Updated description in *Overview*	15
• Updated image in *Functional Block Diagram*	15

Changes from Revision K (January 2014) to Revision L (May 2015)	Page
• Added *Applications*	1
• Added *Pin Configuration and Functions* section, *ESD Ratings* table, *Feature Description* section, *Device Functional Modes*, *Application and Implementation* section, *Power Supply Recommendations* section, *Layout* section, *Device and Documentation Support* section, and *Mechanical, Packaging, and Orderable Information* section	1

Copyright © 2023 Texas Instruments Incorporated

Changes from Revision J (September 2004) to Revision K (January 2014) **Page**

- Updated document to new TI data sheet format - no specification changes....1
- Deleted *Ordering Information* table.... 1
- Updated *Features* with Military Disclaimer.... 1

Copyright © 2023 Texas Instruments Incorporated

5 Pin Configuration and Functions

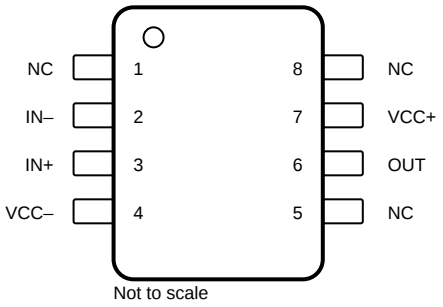

Figure 5-1. TL061x D, P, and PS Package, 8-Pin SOIC, PDIP, and SO (Top View)

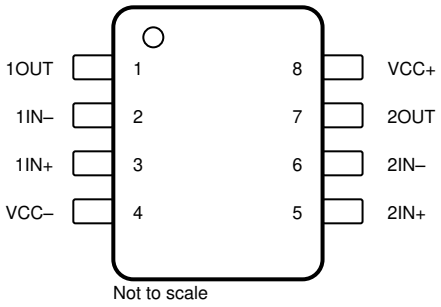

Figure 5-2. TL062x D, JG, P, PS, and PW Package, 8-Pin SOIC, CDIP, PDIP, SO, and TSSOP (Top View)

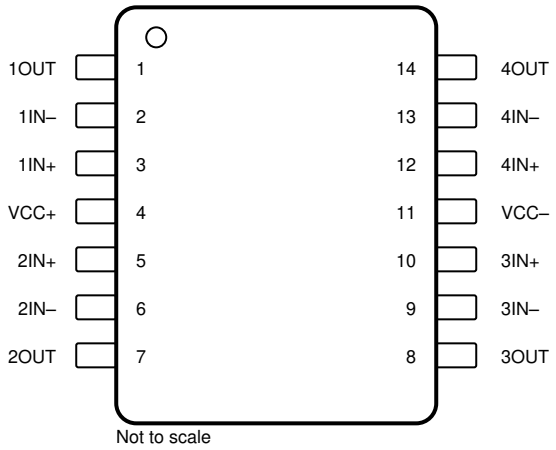

Figure 5-3. TL064x D, J, N, NS, PW, and W Package, 14-Pin SOIC, CDIP, PDIP, SO, TSSOP and CFP (Top View)

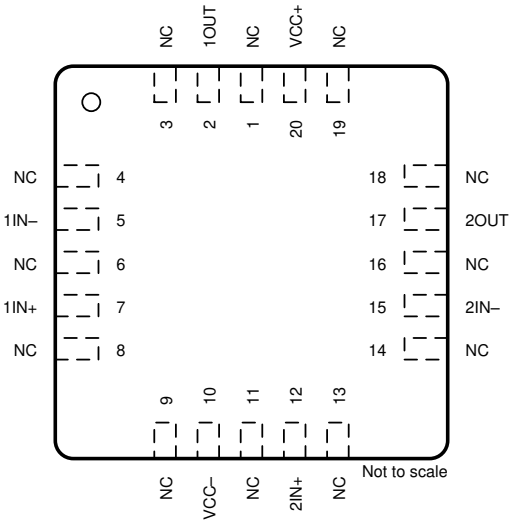

Figure 5-4. TL062 FK Package, 20-Pin LCCC (Top View)

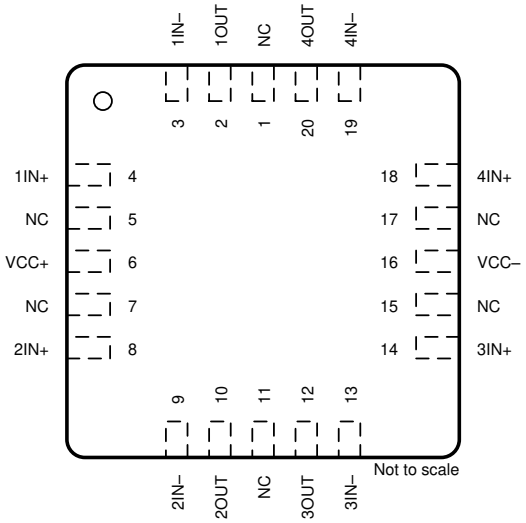

Figure 5-5. TL064 FK Package, 20-Pin LCCC (Top View)

Copyright © 2023 Texas Instruments Incorporated

Table 5-1. Pin Functions

PIN						TYPE[1]	DESCRIPTION
NAME	TL061	TL062		TL064			
	D, P, PS	D, JG, P, PS, PW	FK	D, J, N, NS, PW, W	FK		
1IN–	—	2	5	2	3	I	Negative input
1IN+	—	3	7	3	4	I	Positive input
1OUT	—	1	2	1	2	O	Output
2IN–	—	6	15	6	9	I	Negative input
2IN+	—	5	12	5	8	I	Positive input
2OUT	—	7	17	7	10	O	Output
3IN–	—	—	—	9	13	I	Negative input
3IN+	—	—	—	10	14	I	Positive input
3OUT	—	—	—	8	12	O	Output
4IN–	—	—	—	13	19	I	Negative input
4IN+	—	—	—	12	18	I	Positive input
4OUT	—	—	—	14	20	O	Output
IN–	2	—	—	—	—	I	Negative input
IN+	3	—	—	—	—	I	Positive input
NC	8	—	1	—	1	—	Do not connect
			3				
			4		5		
			6				
			8		7		
			9				
			11		11		
			13				
			14		15		
			16				
			18		17		
			19				
OFFSET N1	1	—	—	—	—	—	Input offset adjustment
OFFSET N2	5	—	—	—	—	—	Input offset adjustment
OUT	6	—	—	—	—	O	Output
$V_{CC–}$	4	4	10	11	16	—	Power supply
V_{CC+}	7	8	20	4	6	—	Power supply

(1) I = input, O = output

Copyright © 2023 Texas Instruments Incorporated

6 Specifications

6.1 Absolute Maximum Ratings

over operating free-air temperature range (unless otherwise noted)(1)

			MIN	MAX	UNIT
V_{CC+}	Supply voltage(2)			18	V
V_{CC-}				–18	
V_{ID}	Differential input voltage(3)			±30	V
V_I	Input voltage(2) (4)			±15	V
	Duration of output short circuit(5)		Unlimited		
T_J	Operating virtual junction temperature			150	°C
	Case temperature for 60 seconds	FK package		260	°C
	Lead temperature 1.6 mm (1/16 inch) from case for 60 seconds	J, JG, U, or W package		300	°C
	Lead temperature 1.6 mm (1/16 inch) from case for 10 seconds	D, N, NS, P, PS, or PW package		260	°C
T_{stg}	Storage temperature		–65	150	°C

(1) Stresses beyond those listed under *Absolute Maximum Ratings* may cause permanent damage to the device. These are stress ratings only, and functional operation of the device at these or any other conditions beyond those indicated under *Recommended Operating Conditions* is not implied. Exposure to absolute-maximum-rated conditions for extended periods may affect device reliability.
(2) All voltage values, except differential voltages, are with respect to the midpoint between V_{CC+} and V_{CC-}.
(3) Differential voltages are at IN+, with respect to IN−.
(4) The magnitude of the input voltage must never exceed the magnitude of the supply voltage or 15 V, whichever is less.
(5) The output may be shorted to ground or to either supply. Temperature or supply voltages must be limited so that the dissipation rating is not exceeded.

6.2 ESD Ratings

			VALUE	UNIT
$V_{(ESD)}$	Electrostatic discharge	Human body model (HBM), per ANSI/ESDA/JEDEC JS-001(1)	2000	V
		Charged-device model (CDM), per JEDEC specification JESD22-C101(2)	1500	

(1) JEDEC document JEP155 states that 500-V HBM allows safe manufacturing with a standard ESD control process.
(2) JEDEC document JEP157 states that 250-V CDM allows safe manufacturing with a standard ESD control process.

6.3 Recommended Operating Conditions

over operating free-air temperature range (unless otherwise noted)

			MIN	MAX	UNIT
V_{CC+}	Supply voltage		5	15	V
V_{CC-}	Supply voltage		–5	–15	V
V_{CM}	Common-mode voltage		V_{CC-} + 4	V_{CC+} – 4	V
T_A	Ambient temperature	TL06xM	–55	125	°C
		TL06xQ	–40	125	
		TL06xI	–40	85	
		TL06xC	0	70	

Copyright © 2023 Texas Instruments Incorporated

6.4 Thermal Information (TL061)

THERMAL METRIC[1]		TL061		UNIT
		D (SOIC)	P (PDIP)	
		8 PINS	8 PINS	
$R_{\theta JA}$	Junction-to-ambient thermal resistance[2] [3]	97	85	°C/W
$R_{\theta JC(top)}$	Junction-to-case (top) thermal resistance[4] [5]	—	—	°C/W

(1) For more information about traditional and new thermal metrics, see the *Semiconductor and IC Package Thermal Metrics* application report, SPRA953.
(2) Maximum power dissipation is a function of $T_{J(max)}$, $R_{\theta JA}$, and T_A. The maximum allowable power dissipation at any allowable ambient temperature is $P_D = (T_{J(max)} – T_A)/R_{\theta JA}$. Operating at the absolute maximum T_J of 150°C can affect reliability.
(3) The package thermal impedance is calculated in accordance with JESD 51-7.
(4) Maximum power dissipation is a function of $T_{J(max)}$, $R_{\theta JC}$, and T_C. The maximum allowable power dissipation at any allowable ambient temperature is $P_D = (T_{J(max)} – T_C) / R_{\theta JC}$. Operating at the absolute maximum T_J of 150°C can affect reliability.
(5) The package thermal impedance is calculated in accordance with MIL-STD-883.

6.5 Thermal Information (TL062)

THERMAL METRIC[1]		TL062						UNIT
		D (SOIC)	P (PDIP)	PS (SO)	PW (TSSOP)	FK (LCCC)	JG (CDIP)	
		8 PINS	8 PINS	8 PINS	8 PINS	20 PINS	8 PINS	
$R_{\theta JA}$	Junction-to-ambient thermal resistance[2] [3]	97	85	95	149	—	—	°C/W
$R_{\theta JC(top)}$	Junction-to-case (top) thermal resistance[4] [5]	—	—	—	—	5.61	14.5	°C/W

6.6 Thermal Information (TL064)

THERMAL METRIC[1]		TL064								UNIT
		D (SOIC)	N (PDIP)	NS (SO)	PS (SO)	PW (TSSOP)	FK (LCCC)	J (CDIP)	W (CFP)	
		14 PINS	14 PINS	14 PINS	8 PINS	14 PINS	20 PINS	14 PINS	14 PINS	
$R_{\theta JA}$	Junction-to-ambient thermal resistance[2] [3]	86	80	76	95	113	—	—	—	°C/W
$R_{\theta JC(top)}$	Junction-to-case (top) thermal resistance[2] [3]	—	—	—	—	—	5.61	15.05	14.65	°C/W

(1) For more information about traditional and new thermal metrics, see the *Semiconductor and IC Package Thermal Metrics* application report, SPRA953.
(2) Maximum power dissipation is a function of $T_{J(max)}$, $R_{\theta JC}$, and T_C. The maximum allowable power dissipation at any allowable ambient temperature is $P_D = (T_{J(max)} – T_C) / R_{\theta JC}$. Operating at the absolute maximum T_J of 150°C can affect reliability.
(3) The package thermal impedance is calculated in accordance with MIL-STD-883.

Copyright © 2023 Texas Instruments Incorporated

6.7 Electrical Characteristics for TL06xC and TL06xxC

$V_{CC±}$ = ±15 V, R_L = 10 kΩ to (V_{CC+} + $V_{CC–}$) / 2 (unless otherwise noted)

PARAMETER		TEST CONDITIONS[1]		TL061C, TL062C, TL064C			TL061AC, TL062AC, TL064AC			UNIT
				MIN	TYP	MAX	MIN	TYP	MAX	
V_{IO}	Input offset voltage	V_O = 0, R_S = 50 Ω	T_A = 25°C		3	15		3	6	mV
			T_A = Full range			20			7.5	
α_{VIO}	Temperature coefficient of input offset voltage	V_O = 0, R_S = 50 Ω, T_A = Full range			10			10		µV/°C
I_{IO} [3]	Input offset current	V_O = 0	T_A = 25°C		5	200		5	100	pA
			T_A = Full range			5			3	nA
I_{IB} [3]	Input bias current[2]	V_O = 0	T_A = 25°C		30	400		30	200	pA
			T_A = Full range			10			7	nA
V_{ICR}	Common-mode input voltage range	T_A = 25°C		±11	–12 to 15		±11	–12 to 15		V
V_{OM}	Maximum peak output voltage swing	R_L = 10 kΩ, T_A = 25°C		±10	±13.5		±10	±13.5		V
		R_L ≥ 10 kΩ, T_A = Full range		±10			±10			
A_{VD}	Large-signal differential voltage amplification	V_O = ±10 V, R_L ≥ 2 kΩ	T_A = 25°C	3	6		4	6		V/mV
			T_A = Full range	3			4			
B_1	Unity-gain bandwidth	R_L = 10 kΩ, T_A = 25°C			1			1		MHz
r_i	Input resistance	T_A = 25°C			10^{12}			10^{12}		Ω
CMRR	Common-mode rejection ratio	V_{IC} = V_{ICR}min, V_O = 0, R_S = 50 Ω, T_A = 25°C		70	86		80	86		dB
k_{SVR}	Supply-voltage rejection ratio ($\Delta V_{CC±}/\Delta V_{IO}$)	V_{CC} = ±9 V to ±15 V, V_O = 0, R_S = 50 Ω, T_A = 25°C		70	95		80	95		dB
P_D	Total power dissipation (each amplifier)	V_O = 0, No load, T_A = 25°C			6	7.5		6	7.5	mW
I_{CC}	Supply current (each amplifier)	V_O = 0, No load, T_A = 25°C			200	250		200	250	µA
V_{O1}/V_{O2}	Crosstalk attenuation	A_{VD} = 100, T_A = 25°C			120			120		dB

(1) All characteristics are measured under open-loop conditions with zero common-mode input voltage unless otherwise specified. Full range for T_A is 0°C to 70°C for TL06xC, TL06xAC, and TL06xBC and –40°C to 85°C for TL06xI.

(2) Input bias currents of an FET-input operational amplifier are normal junction reverse currents, which are temperature sensitive, as shown in Figure 6-12. Pulse techniques are used to maintain the junction temperature as close to the ambient temperature as possible.

(3) Specified by design and characterization; not production tested.

Copyright © 2023 Texas Instruments Incorporated

6.8 Electrical Characteristics for TL06xxC and TL06xI

$V_{CC±}$ = ±15 V, R_L = 10 kΩ to (V_{CC+} + $V_{CC–}$) / 2 (unless otherwise noted)

PARAMETER		TEST CONDITIONS[1]		TL061BC, TL062BC, TL064BC			TL061I, TL062I, TL064I			UNIT
				MIN	TYP	MAX	MIN	TYP	MAX	
V_{IO}	Input offset voltage	V_O = 0, R_S = 50 Ω	T_A = 25°C		2	3		3	6	mV
			T_A = Full range			5			9	
α_{VIO}	Temperature coefficient of input offset voltage	V_O = 0, R_S = 50 Ω, T_A = Full range			10			10		μV/°C
I_{IO} [3]	Input offset current	V_O = 0	T_A = 25°C		5	100		5	100	pA
			T_A = Full range			3			10	nA
I_{IB} [3]	Input bias current[2]	V_O = 0	T_A = 25°C		30	200		30	200	pA
			T_A = Full range			7			20	nA
V_{ICR}	Common-mode input voltage range	T_A = 25°C		±11	–12 to 15		±11	–12 to 15		V
V_{OM}	Maximum peak output voltage swing	R_L = 10 kΩ, T_A = 25°C		±10	±13.5		±10	±13.5		V
		R_L ≥ 10 kΩ, T_A = Full range		±10			±10			
A_{VD}	Large-signal differential voltage amplification	V_O = ±10 V, R_L ≥ 2 kΩ	T_A = 25°C	4	6		4	6		V/mV
			T_A = Full range	4			4			
B_1	Unity-gain bandwidth	R_L = 10 kΩ, T_A = 25°C			1			1		MHz
r_i	Input resistance	T_A = 25°C			10^{12}			10^{12}		Ω
CMRR	Common-mode rejection ratio	V_{IC} = V_{ICR}min, V_O = 0, R_S = 50 Ω, T_A = 25°C		80	86		80	86		dB
k_{SVR}	Supply-voltage rejection ratio ($\Delta V_{CC±}/\Delta V_{IO}$)	V_{CC} = ±9 V to ±15 V, V_O = 0, R_S = 50 Ω, T_A = 25°C		80	95		80	95		dB
P_D	Total power dissipation (each amplifier)	V_O = 0, No load, T_A = 25°C			6	7.5		6	7.5	mW
I_{CC}	Supply current (each amplifier)	V_O = 0, No load, T_A = 25°C			200	250		200	250	μA
V_{O1}/V_{O2}	Crosstalk attenuation	A_{VD} = 100, T_A = 25°C			120			120		dB

(1) All characteristics are measured under open-loop conditions with zero common-mode input voltage, unless otherwise specified. Full range for T_A is 0°C to 70°C for TL06xC, TL06xAC, and TL06xBC and –40°C to 85°C for TL06xI.

(2) Input bias currents of an FET-input operational amplifier are normal junction reverse currents, which are temperature sensitive, as shown in Figure 6-12. Pulse techniques are used to maintain the junction temperature as close to the ambient temperature as possible.

(3) Assured by design and characterization; not production tested.

Copyright © 2023 Texas Instruments Incorporated

6.9 Electrical Characteristics for TL06xM

$V_{CC±}$ = ±15 V, R_L = 10 kΩ to (V_{CC+} + $V_{CC–}$) / 2 (unless otherwise noted)

PARAMETER		TEST CONDITIONS[2]		TL061M, TL062M			TL064M			UNIT
				MIN	TYP	MAX	MIN	TYP	MAX	
V_{IO}	Input offset voltage	V_O = 0, R_S = 50 Ω	T_A = 25°C		3	6		3	9	mV
			T_A = –55°C to 125°C			9			15	
α_{VIO}	Temperature coefficient of input offset voltage	V_O = 0, R_S = 50 Ω, T_A = –55°C to 125°C			10			10		μV/°C
I_{IO} [4]	Input offset current	V_O = 0	T_A = 25°C		5	100		5	100	pA
			T_A = –55°C			20[1]			20[1]	nA
			T_A = 125°C			20			20	
I_{IB} [4]	Input bias current[3]	V_O = 0	T_A = 25°C		30	200		30	200	pA
			T_A = –55°C			50[1]			50[1]	nA
			T_A = 125°C			50			50	
V_{ICR}	Common-mode input voltage range	T_A = 25°C		±11	–12 to 15		±11	–12 to 15		V
V_{OM}	Maximum peak output voltage swing	R_L = 10 kΩ, T_A = 25°C		±10	±13.5		±10	±13.5		V
		R_L ≥ 10 kΩ, T_A = –55°C to 125°C		±10			±10			
A_{VD}	Large-signal differential voltage amplification	V_O = ±10 V, R_L ≥ 2 kΩ	T_A = 25°C	4	6		4	6		V/mV
			T_A = –55°C to 125°C	4			4			
B_1	Unity-gain bandwidth	R_L = 10 kΩ, T_A = 25°C			1			1		MHz
r_i	Input resistance	T_A = 25°C			10^{12}			10^{12}		Ω
CMRR	Common-mode rejection ratio	V_{IC} = V_{ICR}min, V_O = 0, R_S = 50 Ω, T_A = 25°C		80	86		80	86		dB
k_{SVR}	Supply-voltage rejection ratio ($\Delta V_{CC±}/\Delta V_{IO}$)	V_{CC} = ±9 V to ±15 V, V_O = 0, R_S = 50 Ω, T_A = 25°C		80	95		80	95		dB
P_D	Total power dissipation (each amplifier)	V_O = 0, No load, T_A = 25°C			6	7.5		6	7.5	mW
I_{CC}	Supply current (each amplifier)	V_O = 0, No load, T_A = 25°C			200	250		200	250	μA
V_{O1}/V_{O2}	Crosstalk attenuation	A_{VD} = 100, T_A = 25°C			120			120		dB

(1) This parameter is not production tested.
(2) All characteristics are measured under open-loop conditions, with zero common-mode voltage, unless otherwise specified.
(3) Input bias currents of an FET-input operational amplifier are normal junction reverse currents, which are temperature sensitive, as shown in Figure 6-12. Pulse techniques are used to maintain the junction temperature as close to the ambient temperature as possible.
(4) Specified by design and characterization; not production tested.

6.10 Operating Characteristics

$V_{CC±}$ = ±15 V, T_A= 25°C, R_L = 10 kΩ to (V_{CC+} + $V_{CC–}$) / 2

PARAMETER		TEST CONDITIONS		MIN	TYP	MAX	UNIT
SR	Slew rate at unity gain[1]	V_I = 10 V, R_L = 10 kΩ,	C_L = 100 pF, see Figure 7-1	1.5	3.5		V/μs
t_r	Rise-time	V_I = 20 V, R_L = 10 kΩ,	C_L = 100 pF, see Figure 7-1		0.2		μs
	Overshoot factor				10%		
V_n	Equivalent input noise voltage	R_S = 20 Ω	f = 1 kHz		30		nV/√Hz

(1) Slew rate at –55°C to 125°C is 0.7 V/μs min.

Copyright © 2023 Texas Instruments Incorporated

Typical Characteristics

Data at high and low temperatures are applicable only within the specified operating free-air temperature ranges of the various devices.

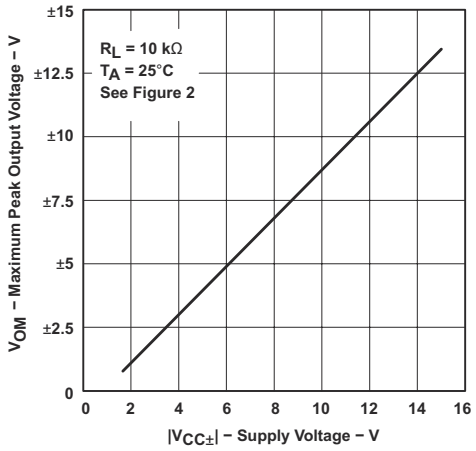

Figure 6-1. Maximum Peak Output Voltage vs Supply Voltage

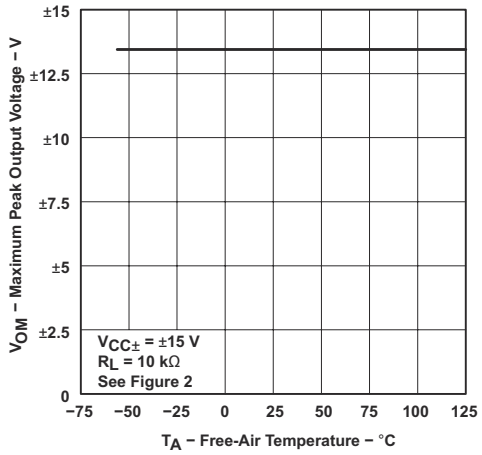

Figure 6-2. Maximum Peak Output Voltage vs Free-Air Temperature

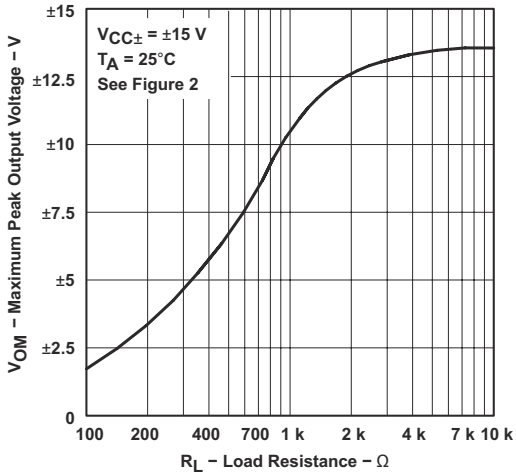

Figure 6-3. Maximum Peak Output Voltage vs Load Resistance

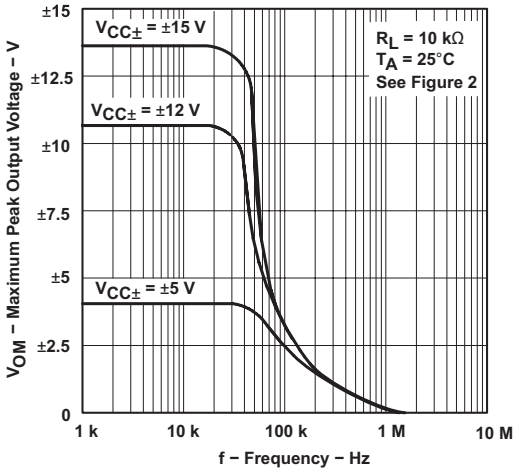

Figure 6-4. Maximum Peak Output Voltage vs Frequency

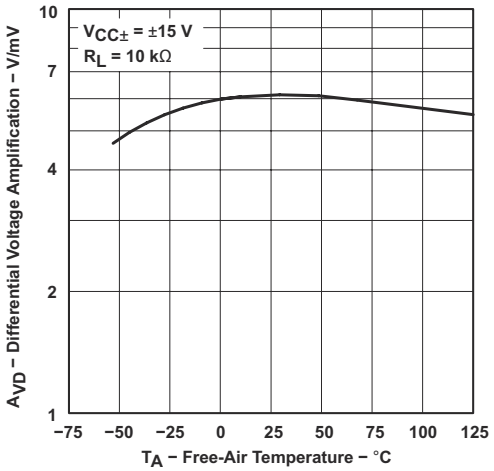

Figure 6-5. Differential Voltage Amplification vs Free-Air Temperature

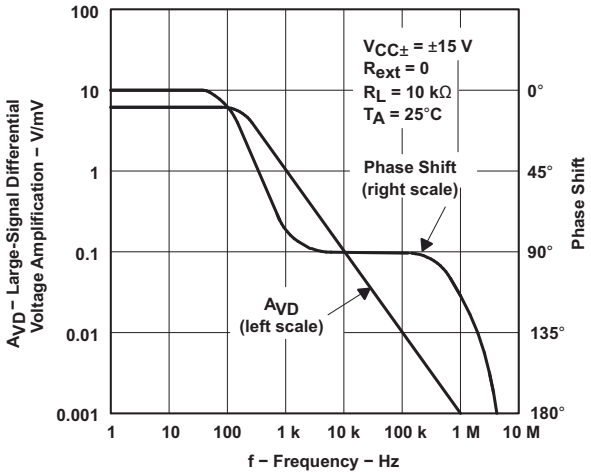

Figure 6-6. Large-Signal Differential Voltage Amplification and Phase Shift vs Frequency

Typical Characteristics (continued)

Data at high and low temperatures are applicable only within the specified operating free-air temperature ranges of the various devices.

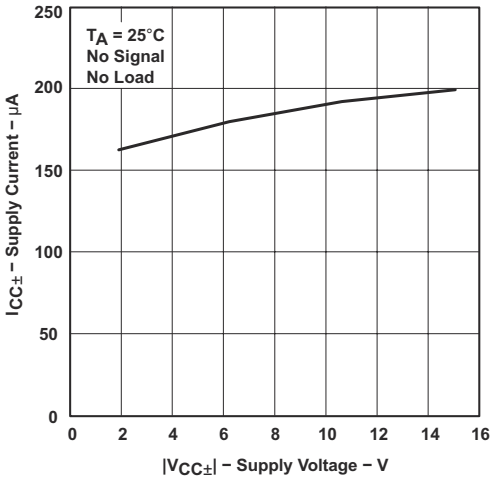

Figure 6-7. Supply Current vs Supply Voltage

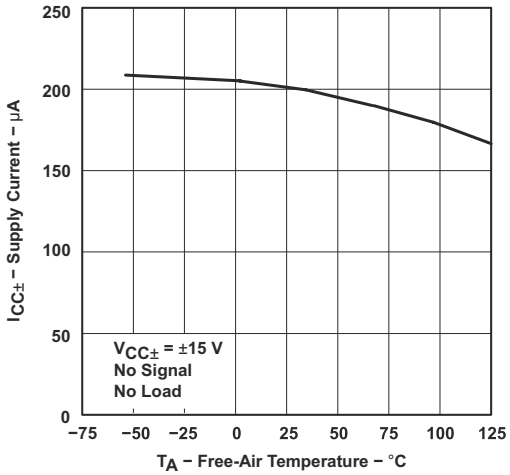

Figure 6-8. Supply Current vs Free-Air Temperature

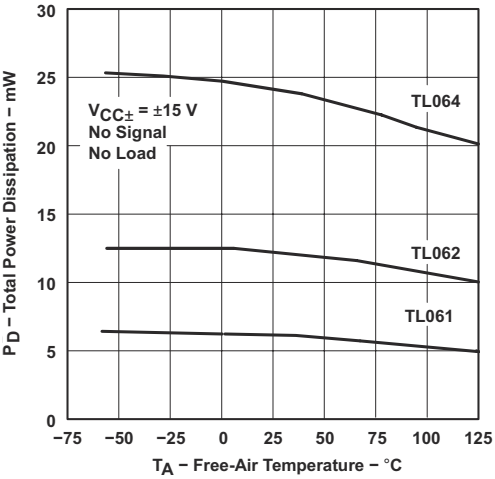

Figure 6-9. Total Power Dissipation vs Free-Air Temperature

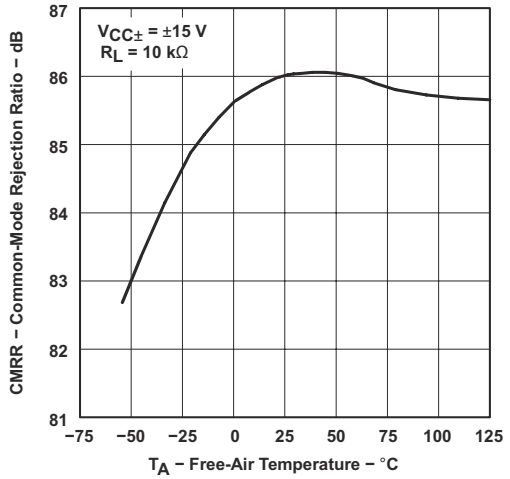

Figure 6-10. All Except TL06_C Common-Mode Rejection Ratio vs Free-Air Temperature

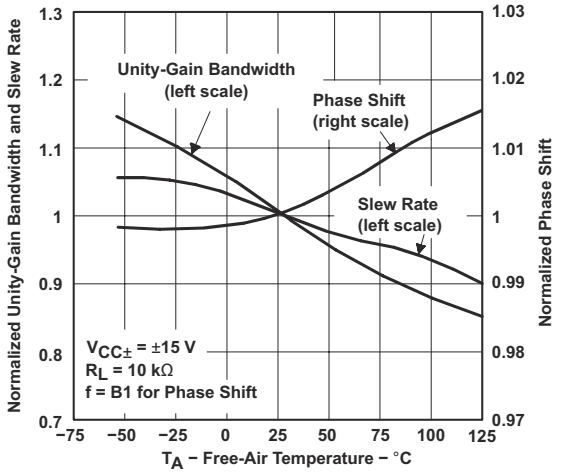

Figure 6-11. Normalized Unity-Gain Bandwidth, Slew Rate, and Phase Shift vs Free-Air Temperature

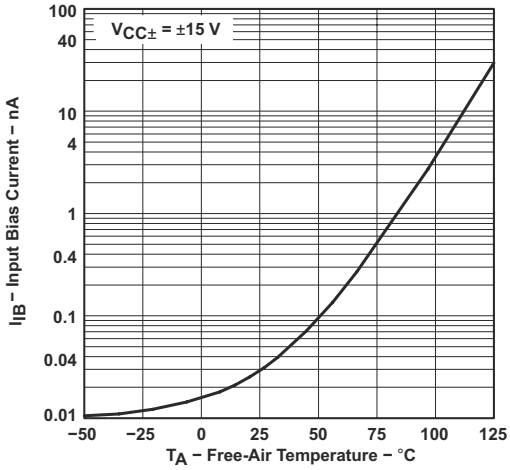

Figure 6-12. Input Bias Current vs Free-Air Temperature

Copyright © 2023 Texas Instruments Incorporated

Typical Characteristics (continued)

Data at high and low temperatures are applicable only within the specified operating free-air temperature ranges of the various devices.

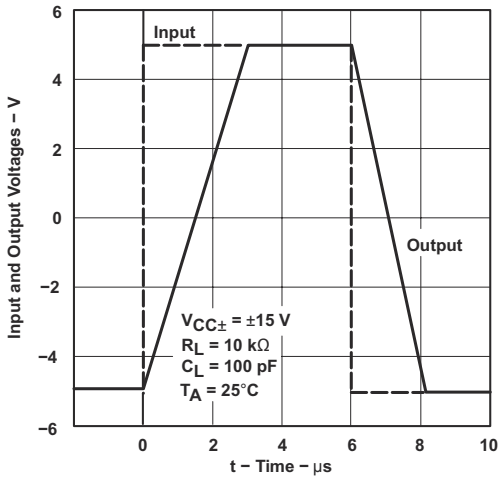

Figure 6-13. Voltage-Follower Large-Signal Pulse Response vs Time

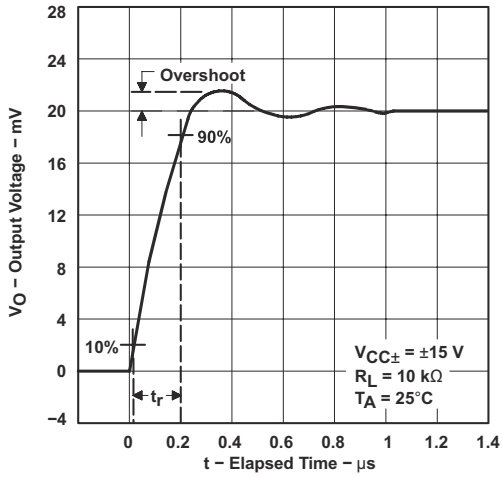

Figure 6-14. Output Voltage vs Elapsed Time

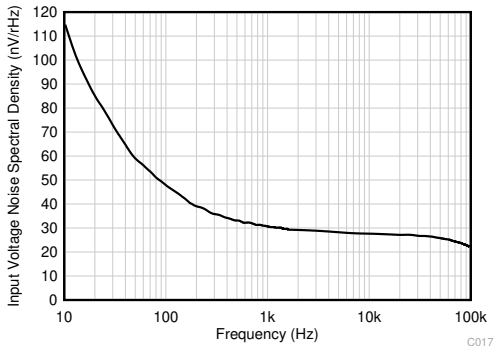

Figure 6-15. Equivalent Input Noise Voltage vs Frequency

Copyright © 2023 Texas Instruments Incorporated

7 Parameter Measurement Information

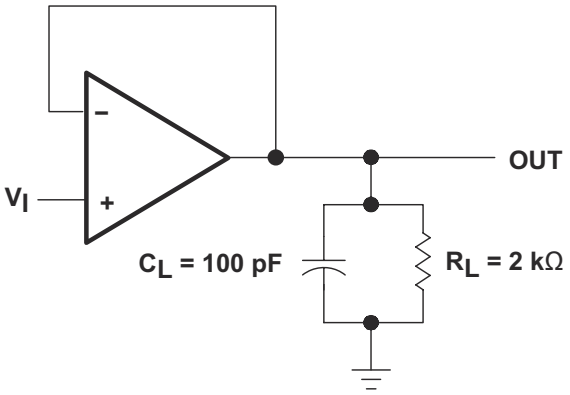

Figure 7-1. Unity-Gain Amplifier

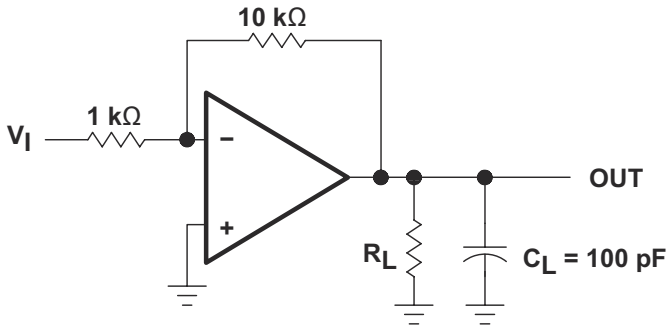

Figure 7-2. Gain-of-10 Inverting Amplifier

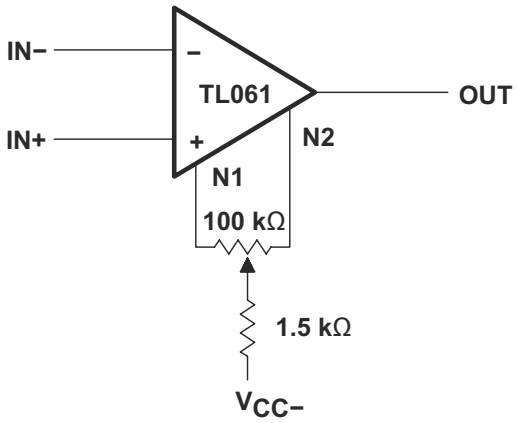

Figure 7-3. Input Offset-Voltage Null Circuit

Copyright © 2023 Texas Instruments Incorporated

8 Detailed Description

8.1 Overview

The TL06x (TL061, TL062, and TL064) family of industry-standard operational amplifiers (op amps) mirror the TL07x and TL08x family of op amps with lower power consumption. These devices provide outstanding value for cost-sensitive applications, featuring high input impedance, wide bandwidth, high slew rate, and low input offset and input bias currents. High ESD (1.5 kV, HBM), integrated EMI and RF filters, and wide temperature operation enable the TL06x devices to be used in rugged and environmentally-demanding applications.

The C-suffix devices are characterized for operation from 0°C to 70°C. The I-suffix devices are characterized for operation from −40°C to 85°C, and the M-suffix devices are characterized for operation over the full military temperature range of −55°C to 125°C.

8.2 Functional Block Diagram

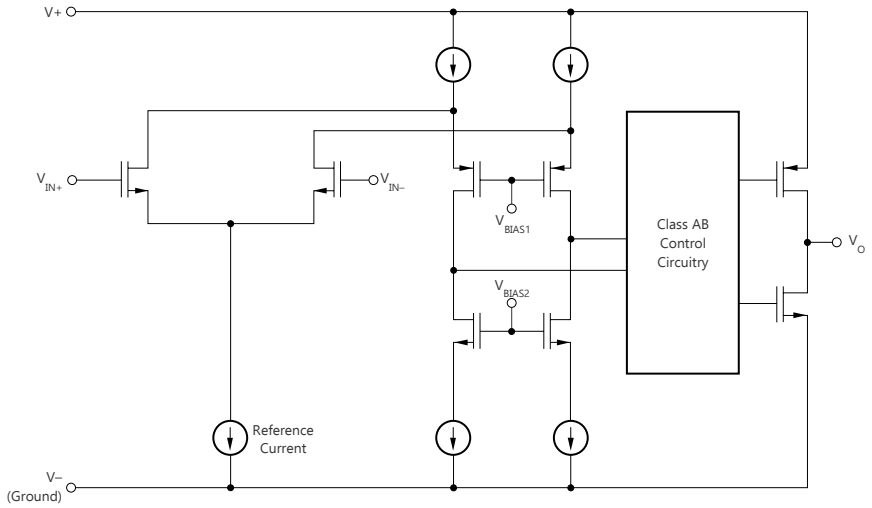

8.3 Feature Description

8.3.1 Common-Mode Rejection Ratio

The common-mode rejection ratio (CMRR) of an amplifier is a measure of how well the device rejects unwanted input signals common to both input leads. It is found by taking the ratio of the change in input offset voltage to the change in the input voltage and converting to decibels. Ideally the CMRR is infinite, but in practice, amplifiers are designed to have it as high as possible. The CMRR of this device is 86 dB.

8.3.2 Slew Rate

The slew rate is the rate at which an operational amplifier can change its output when there is a change on the input. These devices have a 3.5-V/µs slew rate.

8.4 Device Functional Modes

These devices are powered on when the supply is connected. This device can be operated as a single supply operational amplifier or dual supply amplifier depending on the application.

Copyright © 2023 Texas Instruments Incorporated

9 Applications and Implementation

Note

Information in the following applications sections is not part of the TI component specification, and TI does not warrant its accuracy or completeness. TI's customers are responsible for determining suitability of components for their purposes, as well as validating and testing their design implementation to confirm system functionality.

9.1 Application Information

The TL06x series of operational amplifiers can be used in countless applications. The few applications in this section show principles used in all applications of these parts.

9.2 Typical Applications

9.2.1 Inverting Amplifier Application

A typical application for an operational amplifier in an inverting amplifier. This amplifier takes a positive voltage on the input, and makes it a negative voltage of the same magnitude. In the same manner, it also makes negative voltages positive.

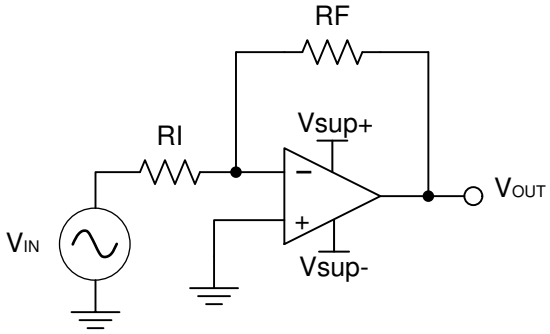

Figure 9-1. Schematic for Inverting Amplifier Application

9.2.1.1 Design Requirements

The supply voltage must be chosen such that it is larger than the input voltage range and output range. For instance, this application will scale a signal of ±0.5 V to ±1.8 V. Setting the supply at ±12 V is sufficient to accommodate this application.

9.2.1.2 Detailed Design Procedure

Determine the gain required by the inverting amplifier:

$$A_V = \frac{VOUT}{VIN} \quad (1)$$

$$A_V = \frac{1.8}{-0.5} = -3.6 \quad (2)$$

Once the desired gain is determined, choose a value for RI or RF. Choose a value in the kΩ range to limit currents in the amplifier circuit to the mA range. This example will choose 10 kΩ for RI which means 36 kΩ will be used for RF. This was determined by Equation 3.

$$A_V = -\frac{RF}{RI} \quad (3)$$

Copyright © 2023 Texas Instruments Incorporated

9.2.1.3 Application Curve

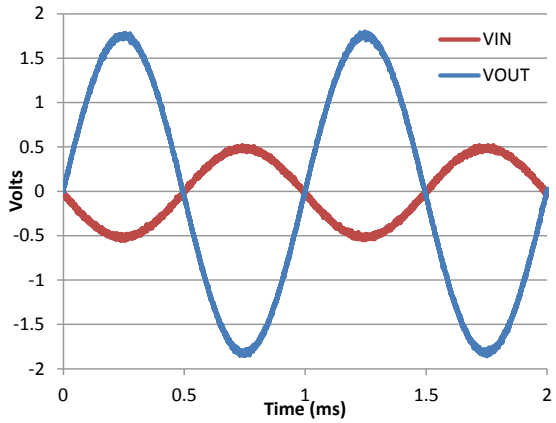

Figure 9-2. Input and Output Voltages of the Inverting Amplifier

9.3 System Examples

9.3.1 General Applications

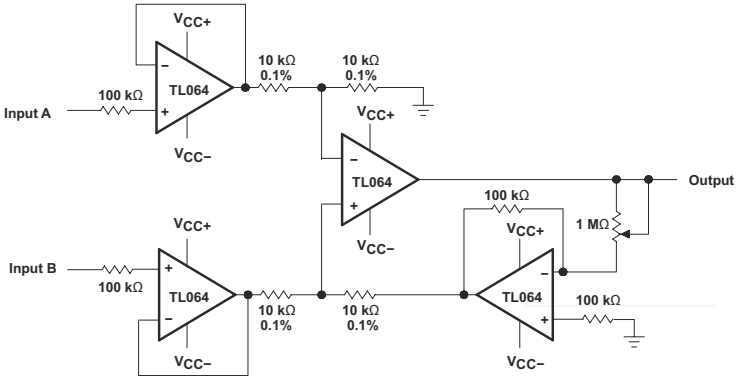

Figure 9-3. Instrumentation Amplifier

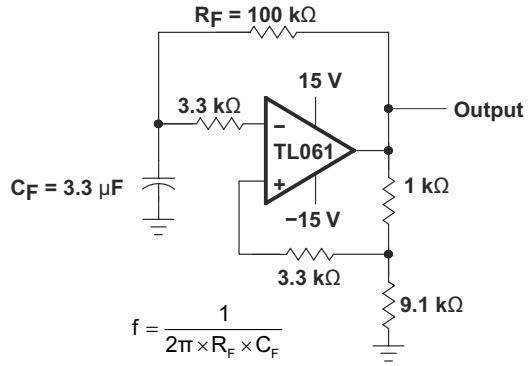

Figure 9-4. 0.5-Hz Square-Wave Oscillator

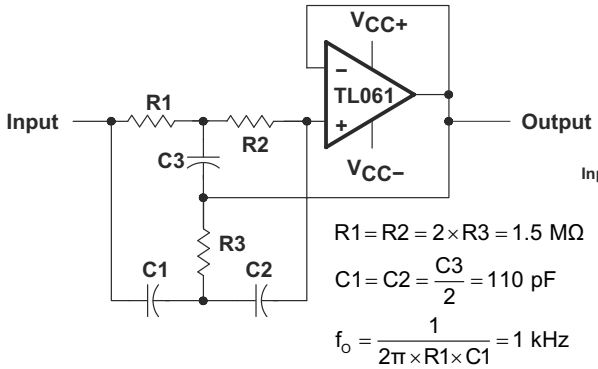

Figure 9-5. High-Q Notch Filter

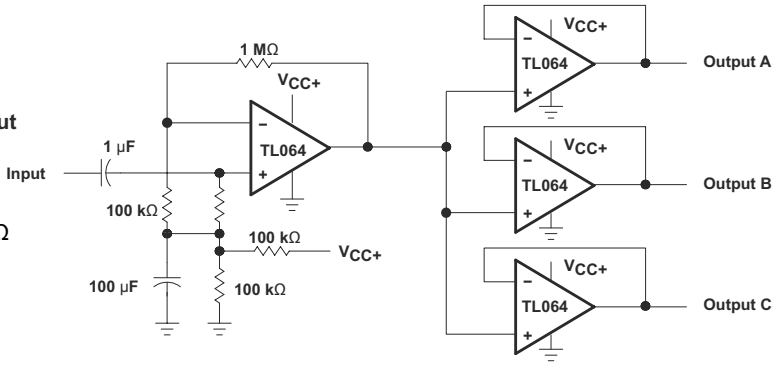

Figure 9-6. Audio-Distribution Amplifier

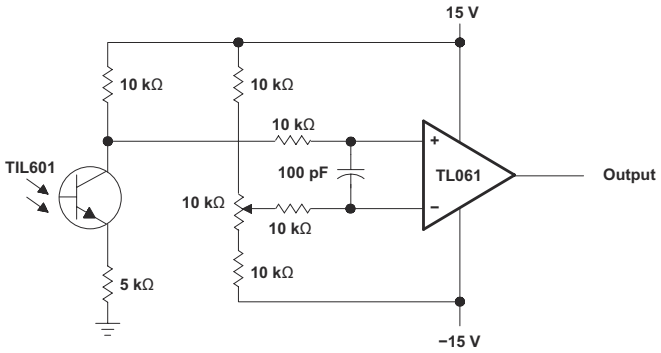

Figure 9-7. Low-Level Light Detector Preamplifier

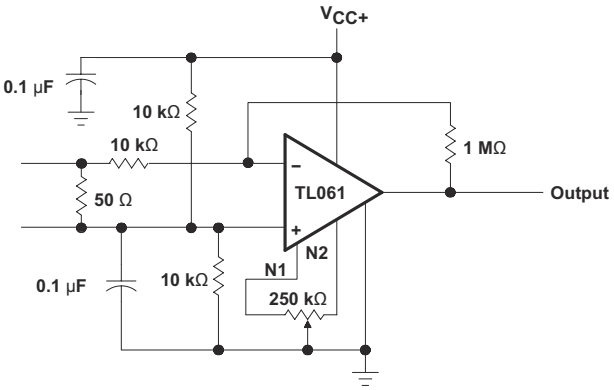

Figure 9-8. AC Amplifier

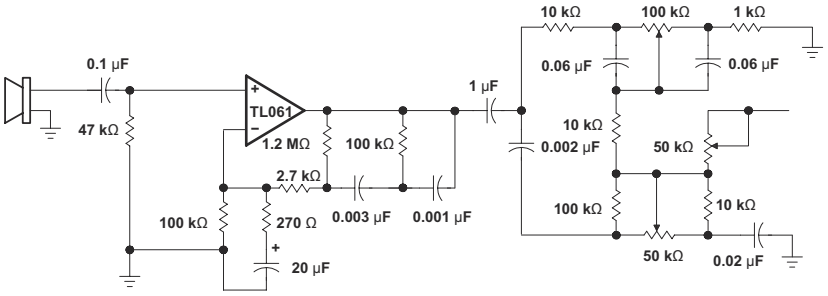

Figure 9-9. Microphone Preamplifier With Tone Control

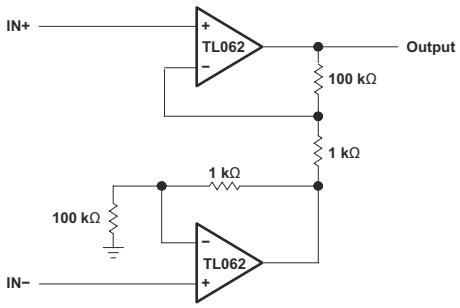

Figure 9-10. Instrumentation Amplifier

Copyright © 2023 Texas Instruments Incorporated

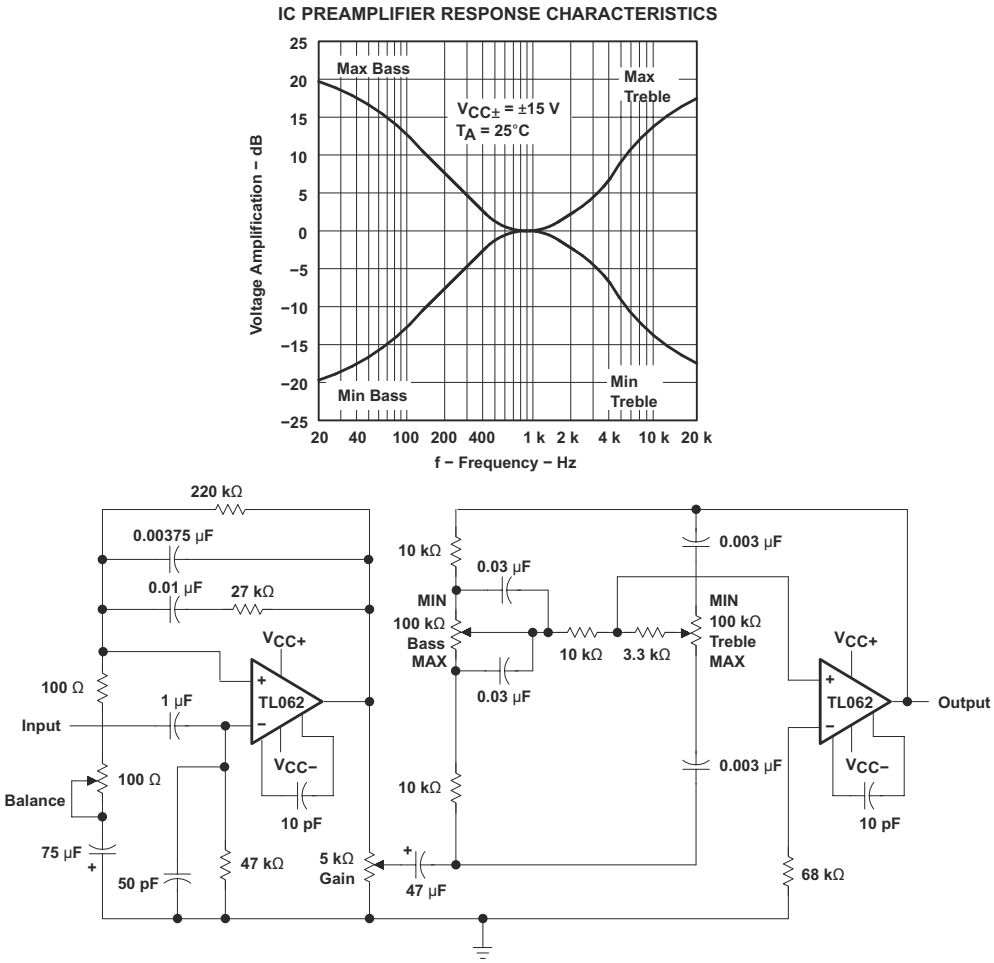

Figure 9-11. IC Preamplifier

9.4 Power Supply Recommendations

CAUTION

Supply voltages larger than 36 V for a single supply, or outside the range of ±18 V for a dual supply can permanently damage the device (see the *Absolute Maximum Ratings*).

Place 0.1-µF bypass capacitors close to the power-supply pins to reduce errors coupling in from noisy or high impedance power supplies. For more detailed information on bypass capacitor placement, refer to the *Layout* section.

Copyright © 2023 Texas Instruments Incorporated

9.5 Layout

9.5.1 Layout Guidelines

For best operational performance of the device, use good PCB layout practices, including:

- Noise can propagate into analog circuitry through the power pins of the circuit as a whole, as well as the operational amplifier. Bypass capacitors are used to reduce the coupled noise by providing low impedance power sources local to the analog circuitry.
  - Connect low-ESR, 0.1-µF ceramic bypass capacitors between each supply pin and ground, placed as close to the device as possible. A single bypass capacitor from V+ to ground is applicable for single supply applications.
- Separate grounding for analog and digital portions of circuitry is one of the simplest and most-effective methods of noise suppression. One or more layers on multilayer PCBs are usually devoted to ground planes. A ground plane helps distribute heat and reduces EMI noise pickup. Make sure to physically separate digital and analog grounds, paying attention to the flow of the ground current. For more detailed information, refer to *Circuit Board Layout Techniques*.
- To reduce parasitic coupling, run the input traces as far away from the supply or output traces as possible. If it is not possible to keep them separate, it is much better to cross the sensitive trace perpendicular as opposed to in parallel with the noisy trace.
- Place the external components as close to the device as possible. Keeping RF and RG close to the inverting input minimizes parasitic capacitance, as shown in *Layout Examples*.
- Keep the length of input traces as short as possible. Always remember that the input traces are the most sensitive part of the circuit.
- Consider a driven, low-impedance guard ring around the critical traces. A guard ring can significantly reduce leakage currents from nearby traces that are at different potentials.

9.5.2 Layout Examples

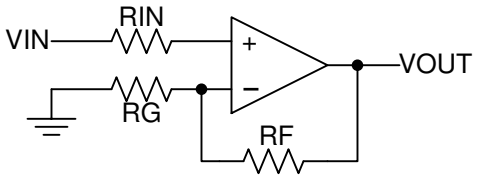

Figure 9-12. Operational Amplifier Schematic for Noninverting Configuration

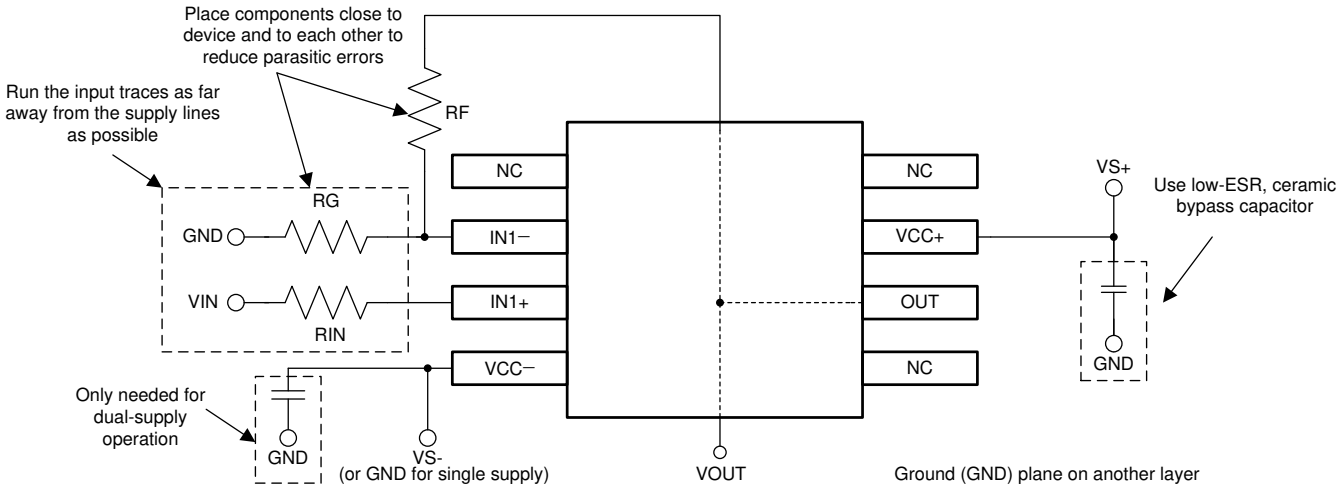

Figure 9-13. Operational Amplifier Board Layout for Noninverting Configuration

Copyright © 2023 Texas Instruments Incorporated

10 Device and Documentation Support

10.1 Documentation Support

10.1.1 Related Documentation

For related documentation, see the following:

- Texas Instruments, *Circuit Board Layout Techniques* chapter extracts

10.2 Support Resources

TI E2E™ support forums are an engineer's go-to source for fast, verified answers and design help — straight from the experts. Search existing answers or ask your own question to get the quick design help you need.

Linked content is provided "AS IS" by the respective contributors. They do not constitute TI specifications and do not necessarily reflect TI's views; see TI's Terms of Use.

10.3 Trademarks

TI E2E™ is a trademark of Texas Instruments.
All trademarks are the property of their respective owners.

10.4 Electrostatic Discharge Caution



This integrated circuit can be damaged by ESD. Texas Instruments recommends that all integrated circuits be handled with appropriate precautions. Failure to observe proper handling and installation procedures can cause damage.

ESD damage can range from subtle performance degradation to complete device failure. Precision integrated circuits may be more susceptible to damage because very small parametric changes could cause the device not to meet its published specifications.

10.5 Glossary

TI Glossary	This glossary lists and explains terms, acronyms, and definitions.

11 Mechanical, Packaging, and Orderable Information

The following pages include mechanical packaging and orderable information. This information is the most current data available for the designated devices. This data is subject to change without notice and revision of this document. For browser based versions of this data sheet, refer to the left hand navigation.

Copyright © 2023 Texas Instruments Incorporated

PACKAGING INFORMATION

Orderable part number	Status (1)	Material type (2)	Package | Pins	Package qty | Carrier	RoHS (3)	Lead finish/ Ball material (4)	MSL rating/ Peak reflow (5)	Op temp (°C)	Part marking (6)
81023022A	Active	Production	LCCC (FK) | 20	55 | TUBE	No	SNPB	N/A for Pkg Type	-55 to 125	81023022A TL062MFKB
8102302PA	Active	Production	CDIP (JG) | 8	50 | TUBE	No	SNPB	N/A for Pkg Type	-55 to 125	8102302PA TL062M
81023032A	Active	Production	LCCC (FK) | 20	55 | TUBE	No	SNPB	N/A for Pkg Type	-55 to 125	81023032A TL064MFKB
8102303CA	Active	Production	CDIP (J) | 14	25 | TUBE	No	SNPB	N/A for Pkg Type	-55 to 125	8102303CA TL064MJB
8102303DA	Active	Production	CFP (W) | 14	25 | TUBE	No	SNPB	N/A for Pkg Type	-55 to 125	8102303DA TL064MWB
TL061ACD	Obsolete	Production	SOIC (D) | 8	-	-	Call TI	Call TI	0 to 70	061AC
TL061ACDR	Active	Production	SOIC (D) | 8	2500 | LARGE T&R	Yes	NIPDAU	Level-1-260C-UNLIM	0 to 70	061AC
TL061ACDR.A	Active	Production	SOIC (D) | 8	2500 | LARGE T&R	Yes	NIPDAU	Level-1-260C-UNLIM	0 to 70	061AC
TL061ACP	Active	Production	PDIP (P) | 8	50 | TUBE	Yes	NIPDAU	N/A for Pkg Type	0 to 70	TL061ACP
TL061ACP.A	Active	Production	PDIP (P) | 8	50 | TUBE	Yes	NIPDAU	N/A for Pkg Type	0 to 70	TL061ACP
TL061BCP	Active	Production	PDIP (P) | 8	50 | TUBE	Yes	NIPDAU	N/A for Pkg Type	0 to 70	TL061BCP
TL061BCP.A	Active	Production	PDIP (P) | 8	50 | TUBE	Yes	NIPDAU	N/A for Pkg Type	0 to 70	TL061BCP
TL061BCPE4	Active	Production	PDIP (P) | 8	50 | TUBE	-	Call TI	Call TI	0 to 70	
TL061CD	Obsolete	Production	SOIC (D) | 8	-	-	Call TI	Call TI	0 to 70	TL061C
TL061CDR	Active	Production	SOIC (D) | 8	2500 | LARGE T&R	Yes	NIPDAU	Level-1-260C-UNLIM	0 to 70	TL061C
TL061CDR.A	Active	Production	SOIC (D) | 8	2500 | LARGE T&R	Yes	NIPDAU	Level-1-260C-UNLIM	0 to 70	TL061C
TL061CP	Active	Production	PDIP (P) | 8	50 | TUBE	Yes	NIPDAU	N/A for Pkg Type	0 to 70	TL061CP
TL061CP.A	Active	Production	PDIP (P) | 8	50 | TUBE	Yes	NIPDAU	N/A for Pkg Type	0 to 70	TL061CP
TL061CPSR	Active	Production	SO (PS) | 8	2000 | LARGE T&R	Yes	NIPDAU	Level-1-260C-UNLIM	0 to 70	T061
TL061CPSR.A	Active	Production	SO (PS) | 8	2000 | LARGE T&R	Yes	NIPDAU	Level-1-260C-UNLIM	0 to 70	T061
TL061ID	Obsolete	Production	SOIC (D) | 8	-	-	Call TI	Call TI	-40 to 85	TL061I
TL061IDR	Active	Production	SOIC (D) | 8	2500 | LARGE T&R	Yes	NIPDAU	Level-1-260C-UNLIM	-40 to 85	TL061I
TL061IDR.A	Active	Production	SOIC (D) | 8	2500 | LARGE T&R	Yes	NIPDAU	Level-1-260C-UNLIM	-40 to 85	TL061I
TL061IDRG4	Active	Production	SOIC (D) | 8	2500 | LARGE T&R	-	Call TI	Call TI	-40 to 85	
TL061IP	Active	Production	PDIP (P) | 8	50 | TUBE	Yes	NIPDAU	N/A for Pkg Type	-40 to 85	TL061IP

Orderable part number	Status (1)	Material type (2)	Package | Pins	Package qty | Carrier	RoHS (3)	Lead finish/ Ball material (4)	MSL rating/ Peak reflow (5)	Op temp (°C)	Part marking (6)
TL061IP.A	Active	Production	PDIP (P) | 8	50 | TUBE	Yes	NIPDAU	N/A for Pkg Type	-40 to 85	TL061IP
TL061IPE4	Active	Production	PDIP (P) | 8	50 | TUBE	-	Call TI	Call TI	-40 to 85	
TL062ACD	Obsolete	Production	SOIC (D) | 8	-	-	Call TI	Call TI	0 to 70	062AC
TL062ACDR	Active	Production	SOIC (D) | 8	2500 | LARGE T&R	Yes	NIPDAU	Level-1-260C-UNLIM	0 to 70	062AC
TL062ACDR.A	Active	Production	SOIC (D) | 8	2500 | LARGE T&R	Yes	NIPDAU	Level-1-260C-UNLIM	0 to 70	062AC
TL062ACDRG4	Active	Production	SOIC (D) | 8	2500 | LARGE T&R	Yes	NIPDAU	Level-1-260C-UNLIM	0 to 70	062AC
TL062ACP	Active	Production	PDIP (P) | 8	50 | TUBE	Yes	NIPDAU	N/A for Pkg Type	0 to 70	TL062ACP
TL062ACP.A	Active	Production	PDIP (P) | 8	50 | TUBE	Yes	NIPDAU	N/A for Pkg Type	0 to 70	TL062ACP
TL062ACPSR	Active	Production	SO (PS) | 8	2000 | LARGE T&R	Yes	NIPDAU	Level-1-260C-UNLIM	0 to 70	T062A
TL062ACPSR.A	Active	Production	SO (PS) | 8	2000 | LARGE T&R	Yes	NIPDAU	Level-1-260C-UNLIM	0 to 70	T062A
TL062BCD	Obsolete	Production	SOIC (D) | 8	-	-	Call TI	Call TI	0 to 70	062BC
TL062BCDR	Active	Production	SOIC (D) | 8	2500 | LARGE T&R	Yes	NIPDAU	Level-1-260C-UNLIM	0 to 70	062BC
TL062BCDR.A	Active	Production	SOIC (D) | 8	2500 | LARGE T&R	Yes	NIPDAU	Level-1-260C-UNLIM	0 to 70	062BC
TL062BCP	Active	Production	PDIP (P) | 8	50 | TUBE	Yes	NIPDAU	N/A for Pkg Type	0 to 70	TL062BCP
TL062BCP.A	Active	Production	PDIP (P) | 8	50 | TUBE	Yes	NIPDAU	N/A for Pkg Type	0 to 70	TL062BCP
TL062CD	Obsolete	Production	SOIC (D) | 8	-	-	Call TI	Call TI	0 to 70	TL062C
TL062CDR	Active	Production	SOIC (D) | 8	2500 | LARGE T&R	Yes	NIPDAU	Level-1-260C-UNLIM	0 to 70	TL062C
TL062CDR.A	Active	Production	SOIC (D) | 8	2500 | LARGE T&R	Yes	NIPDAU	Level-1-260C-UNLIM	0 to 70	TL062C
TL062CDRE4	Active	Production	SOIC (D) | 8	2500 | LARGE T&R	Yes	NIPDAU	Level-1-260C-UNLIM	0 to 70	TL062C
TL062CDRG4	Active	Production	SOIC (D) | 8	2500 | LARGE T&R	Yes	NIPDAU	Level-1-260C-UNLIM	0 to 70	TL062C
TL062CP	Active	Production	PDIP (P) | 8	50 | TUBE	Yes	NIPDAU	N/A for Pkg Type	0 to 70	TL062CP
TL062CP.A	Active	Production	PDIP (P) | 8	50 | TUBE	Yes	NIPDAU	N/A for Pkg Type	0 to 70	TL062CP
TL062CPE4	Active	Production	PDIP (P) | 8	50 | TUBE	-	Call TI	Call TI	0 to 70	
TL062CPS	Active	Production	SO (PS) | 8	80 | TUBE	Yes	NIPDAU	Level-1-260C-UNLIM	0 to 70	T062
TL062CPS.A	Active	Production	SO (PS) | 8	80 | TUBE	Yes	NIPDAU	Level-1-260C-UNLIM	0 to 70	T062
TL062CPSR	Active	Production	SO (PS) | 8	2000 | LARGE T&R	Yes	NIPDAU	Level-1-260C-UNLIM	0 to 70	T062
TL062CPSR.A	Active	Production	SO (PS) | 8	2000 | LARGE T&R	Yes	NIPDAU	Level-1-260C-UNLIM	0 to 70	T062
TL062CPW	Obsolete	Production	TSSOP (PW) | 8	-	-	Call TI	Call TI	0 to 70	T062
TL062CPWR	Active	Production	TSSOP (PW) | 8	2000 | LARGE T&R	Yes	NIPDAU	Level-1-260C-UNLIM	0 to 70	T062
TL062CPWR.A	Active	Production	TSSOP (PW) | 8	2000 | LARGE T&R	Yes	NIPDAU	Level-1-260C-UNLIM	0 to 70	T062
TL062CPWRG4	Obsolete	Production	TSSOP (PW) | 8	-	-	Call TI	Call TI	0 to 70	T062

Orderable part number	Status (1)	Material type (2)	Package | Pins	Package qty | Carrier	RoHS (3)	Lead finish/ Ball material (4)	MSL rating/ Peak reflow (5)	Op temp (°C)	Part marking (6)
TL062ID	Obsolete	Production	SOIC (D) | 8	-	-	Call TI	Call TI	-40 to 85	TL062I
TL062IDR	Active	Production	SOIC (D) | 8	2500 | LARGE T&R	Yes	NIPDAU	Level-1-260C-UNLIM	-40 to 85	TL062I
TL062IDR.A	Active	Production	SOIC (D) | 8	2500 | LARGE T&R	Yes	NIPDAU	Level-1-260C-UNLIM	-40 to 85	TL062I
TL062IP	Active	Production	PDIP (P) | 8	50 | TUBE	Yes	NIPDAU	N/A for Pkg Type	-40 to 85	TL062IP
TL062IP.A	Active	Production	PDIP (P) | 8	50 | TUBE	Yes	NIPDAU	N/A for Pkg Type	-40 to 85	TL062IP
TL062IPWR	Active	Production	TSSOP (PW) | 8	2000 | LARGE T&R	Yes	NIPDAU	Level-1-260C-UNLIM	-40 to 85	Z062
TL062IPWR.A	Active	Production	TSSOP (PW) | 8	2000 | LARGE T&R	Yes	NIPDAU	Level-1-260C-UNLIM	-40 to 85	Z062
TL062IPWRG4	Active	Production	TSSOP (PW) | 8	2000 | LARGE T&R	-	Call TI	Call TI	-40 to 85	
TL062MFKB	Active	Production	LCCC (FK) | 20	55 | TUBE	No	SNPB	N/A for Pkg Type	-55 to 125	81023022A TL062MFKB
TL062MFKB.A	Active	Production	LCCC (FK) | 20	55 | TUBE	No	SNPB	N/A for Pkg Type	-55 to 125	81023022A TL062MFKB
TL062MJG	Active	Production	CDIP (JG) | 8	50 | TUBE	No	SNPB	N/A for Pkg Type	-55 to 125	TL062MJG
TL062MJG.A	Active	Production	CDIP (JG) | 8	50 | TUBE	No	SNPB	N/A for Pkg Type	-55 to 125	TL062MJG
TL062MJGB	Active	Production	CDIP (JG) | 8	50 | TUBE	No	SNPB	N/A for Pkg Type	-55 to 125	8102302PA TL062M
TL062MJGB.A	Active	Production	CDIP (JG) | 8	50 | TUBE	No	SNPB	N/A for Pkg Type	-55 to 125	8102302PA TL062M
TL064ACD	Obsolete	Production	SOIC (D) | 14	-	-	Call TI	Call TI	0 to 70	TL064AC
TL064ACDR	Active	Production	SOIC (D) | 14	2500 | LARGE T&R	Yes	NIPDAU	Level-1-260C-UNLIM	0 to 70	TL064AC
TL064ACDR.A	Active	Production	SOIC (D) | 14	2500 | LARGE T&R	Yes	NIPDAU	Level-1-260C-UNLIM	0 to 70	TL064AC
TL064ACN	Active	Production	PDIP (N) | 14	25 | TUBE	Yes	NIPDAU	N/A for Pkg Type	0 to 70	TL064ACN
TL064ACN.A	Active	Production	PDIP (N) | 14	25 | TUBE	Yes	NIPDAU	N/A for Pkg Type	0 to 70	TL064ACN
TL064BCD	Obsolete	Production	SOIC (D) | 14	-	-	Call TI	Call TI	0 to 70	TL064BC
TL064BCDR	Active	Production	SOIC (D) | 14	2500 | LARGE T&R	Yes	NIPDAU	Level-1-260C-UNLIM	0 to 70	TL064BC
TL064BCDR.A	Active	Production	SOIC (D) | 14	2500 | LARGE T&R	Yes	NIPDAU	Level-1-260C-UNLIM	0 to 70	TL064BC
TL064BCN	Active	Production	PDIP (N) | 14	25 | TUBE	Yes	NIPDAU	N/A for Pkg Type	0 to 70	TL064BCN
TL064BCN.A	Active	Production	PDIP (N) | 14	25 | TUBE	Yes	NIPDAU	N/A for Pkg Type	0 to 70	TL064BCN
TL064CD	Obsolete	Production	SOIC (D) | 14	-	-	Call TI	Call TI	0 to 70	TL064C
TL064CDR	Active	Production	SOIC (D) | 14	2500 | LARGE T&R	Yes	NIPDAU	Level-1-260C-UNLIM	0 to 70	TL064C
TL064CDR.A	Active	Production	SOIC (D) | 14	2500 | LARGE T&R	Yes	NIPDAU	Level-1-260C-UNLIM	0 to 70	TL064C
TL064CN	Active	Production	PDIP (N) | 14	25 | TUBE	Yes	NIPDAU	N/A for Pkg Type	0 to 70	TL064CN

Orderable part number	Status (1)	Material type (2)	Package | Pins	Package qty | Carrier	RoHS (3)	Lead finish/ Ball material (4)	MSL rating/ Peak reflow (5)	Op temp (°C)	Part marking (6)
TL064CN.A	Active	Production	PDIP (N) | 14	25 | TUBE	Yes	NIPDAU	N/A for Pkg Type	0 to 70	TL064CN
TL064CNSR	Active	Production	SOP (NS) | 14	2000 | LARGE T&R	Yes	NIPDAU	Level-1-260C-UNLIM	0 to 70	TL064
TL064CNSR.A	Active	Production	SOP (NS) | 14	2000 | LARGE T&R	Yes	NIPDAU	Level-1-260C-UNLIM	0 to 70	TL064
TL064CPW	Obsolete	Production	TSSOP (PW) | 14	-	-	Call TI	Call TI	0 to 70	T064
TL064CPWR	Active	Production	TSSOP (PW) | 14	2000 | LARGE T&R	Yes	NIPDAU | SN	Level-1-260C-UNLIM	0 to 70	T064
TL064CPWR.A	Active	Production	TSSOP (PW) | 14	2000 | LARGE T&R	Yes	NIPDAU	Level-1-260C-UNLIM	0 to 70	T064
TL064CPWRG4	Active	Production	TSSOP (PW) | 14	2000 | LARGE T&R	Yes	NIPDAU	Level-1-260C-UNLIM	-40 to 85	T064
TL064ID	Obsolete	Production	SOIC (D) | 14	-	-	Call TI	Call TI	-40 to 85	TL064I
TL064IDR	Active	Production	SOIC (D) | 14	2500 | LARGE T&R	Yes	NIPDAU	Level-1-260C-UNLIM	-40 to 85	TL064I
TL064IDR.A	Active	Production	SOIC (D) | 14	2500 | LARGE T&R	Yes	NIPDAU	Level-1-260C-UNLIM	-40 to 85	TL064I
TL064IDRG4	Obsolete	Production	SOIC (D) | 14	-	-	Call TI	Call TI	-40 to 85	TL064I
TL064IN	Active	Production	PDIP (N) | 14	25 | TUBE	Yes	NIPDAU	N/A for Pkg Type	-40 to 85	TL064IN
TL064IN.A	Active	Production	PDIP (N) | 14	25 | TUBE	Yes	NIPDAU	N/A for Pkg Type	-40 to 85	TL064IN
TL064INE4	Active	Production	PDIP (N) | 14	25 | TUBE	-	Call TI	Call TI	-40 to 85	
TL064INS	Active	Production	SOP (NS) | 14	50 | TUBE	Yes	NIPDAU	Level-1-260C-UNLIM	-40 to 85	TL064I
TL064INS.A	Active	Production	SOP (NS) | 14	50 | TUBE	Yes	NIPDAU	Level-1-260C-UNLIM	-40 to 85	TL064I
TL064INSR	Active	Production	SOP (NS) | 14	2000 | LARGE T&R	Yes	NIPDAU	Level-1-260C-UNLIM	-40 to 85	TL064I
TL064INSR.A	Active	Production	SOP (NS) | 14	2000 | LARGE T&R	Yes	NIPDAU	Level-1-260C-UNLIM	-40 to 85	TL064I
TL064IPWR	Active	Production	TSSOP (PW) | 14	2000 | LARGE T&R	Yes	NIPDAU	Level-1-260C-UNLIM	-40 to 85	Z064
TL064IPWR.A	Active	Production	TSSOP (PW) | 14	2000 | LARGE T&R	Yes	NIPDAU	Level-1-260C-UNLIM	-40 to 85	Z064
TL064MFKB	Active	Production	LCCC (FK) | 20	55 | TUBE	No	SNPB	N/A for Pkg Type	-55 to 125	81023032A TL064MFKB
TL064MFKB.A	Active	Production	LCCC (FK) | 20	55 | TUBE	No	SNPB	N/A for Pkg Type	-55 to 125	81023032A TL064MFKB
TL064MJ	Active	Production	CDIP (J) | 14	25 | TUBE	No	SNPB	N/A for Pkg Type	-55 to 125	TL064MJ
TL064MJ.A	Active	Production	CDIP (J) | 14	25 | TUBE	No	SNPB	N/A for Pkg Type	-55 to 125	TL064MJ
TL064MJB	Active	Production	CDIP (J) | 14	25 | TUBE	No	SNPB	N/A for Pkg Type	-55 to 125	8102303CA TL064MJB
TL064MJB.A	Active	Production	CDIP (J) | 14	25 | TUBE	No	SNPB	N/A for Pkg Type	-55 to 125	8102303CA TL064MJB
TL064MWB	Active	Production	CFP (W) | 14	25 | TUBE	No	SNPB	N/A for Pkg Type	-55 to 125	8102303DA TL064MWB

Orderable part number	Status (1)	Material type (2)	Package | Pins	Package qty | Carrier	RoHS (3)	Lead finish/ Ball material (4)	MSL rating/ Peak reflow (5)	Op temp (°C)	Part marking (6)
TL064MWB.A	Active	Production	CFP (W) | 14	25 | TUBE	No	SNPB	N/A for Pkg Type	-55 to 125	8102303DA TL064MWB

(1) **Status:** For more details on status, see our product life cycle.

(2) **Material type:** When designated, preproduction parts are prototypes/experimental devices, and are not yet approved or released for full production. Testing and final process, including without limitation quality assurance, reliability performance testing, and/or process qualification, may not yet be complete, and this item is subject to further changes or possible discontinuation. If available for ordering, purchases will be subject to an additional waiver at checkout, and are intended for early internal evaluation purposes only. These items are sold without warranties of any kind.

(3) **RoHS values:** Yes, No, RoHS Exempt. See the TI RoHS Statement for additional information and value definition.

(4) **Lead finish/Ball material:** Parts may have multiple material finish options. Finish options are separated by a vertical ruled line. Lead finish/Ball material values may wrap to two lines if the finish value exceeds the maximum column width.

(5) **MSL rating/Peak reflow:** The moisture sensitivity level ratings and peak solder (reflow) temperatures. In the event that a part has multiple moisture sensitivity ratings, only the lowest level per JEDEC standards is shown. Refer to the shipping label for the actual reflow temperature that will be used to mount the part to the printed circuit board.

(6) **Part marking:** There may be an additional marking, which relates to the logo, the lot trace code information, or the environmental category of the part.

Multiple part markings will be inside parentheses. Only one part marking contained in parentheses and separated by a "~" will appear on a part. If a line is indented then it is a continuation of the previous line and the two combined represent the entire part marking for that device.

Important Information and Disclaimer: The information provided on this page represents TI's knowledge and belief as of the date that it is provided. TI bases its knowledge and belief on information provided by third parties, and makes no representation or warranty as to the accuracy of such information. Efforts are underway to better integrate information from third parties. TI has taken and continues to take reasonable steps to provide representative and accurate information but may not have conducted destructive testing or chemical analysis on incoming materials and chemicals. TI and TI suppliers consider certain information to be proprietary, and thus CAS numbers and other limited information may not be available for release.

In no event shall TI's liability arising out of such information exceed the total purchase price of the TI part(s) at issue in this document sold by TI to Customer on an annual basis.

OTHER QUALIFIED VERSIONS OF TL062, TL062M, TL064, TL064M :

- Catalog : TL062, TL064
- Military : TL062M, TL064M

NOTE: Qualified Version Definitions:

- Catalog - TI's standard catalog product
- Military - QML certified for Military and Defense Applications

TAPE AND REEL INFORMATION

REEL DIMENSIONS

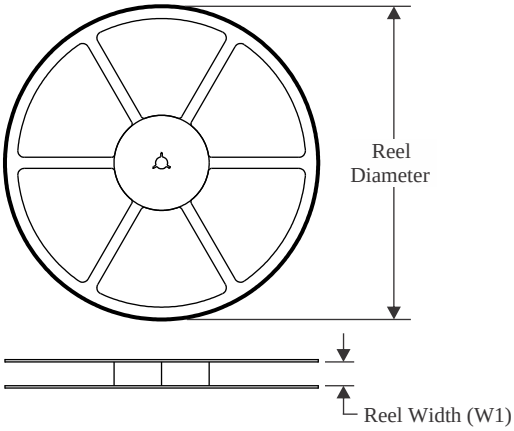

TAPE DIMENSIONS

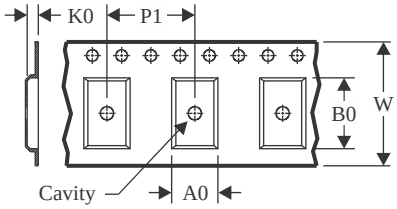

A0	Dimension designed to accommodate the component width
B0	Dimension designed to accommodate the component length
K0	Dimension designed to accommodate the component thickness
W	Overall width of the carrier tape
P1	Pitch between successive cavity centers

QUADRANT ASSIGNMENTS FOR PIN 1 ORIENTATION IN TAPE

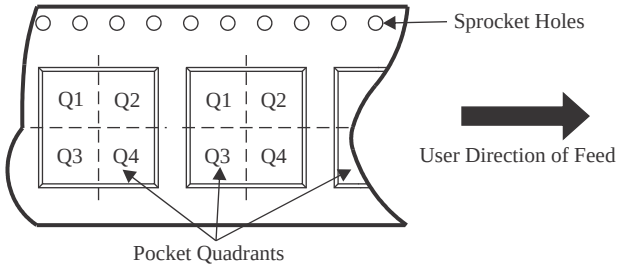

*All dimensions are nominal

Device	Package Type	Package Drawing	Pins	SPQ	Reel Diameter (mm)	Reel Width W1 (mm)	A0 (mm)	B0 (mm)	K0 (mm)	P1 (mm)	W (mm)	Pin1 Quadrant
TL061ACDR	SOIC	D	8	2500	330.0	12.4	6.4	5.2	2.1	8.0	12.0	Q1
TL061CDR	SOIC	D	8	2500	330.0	12.4	6.4	5.2	2.1	8.0	12.0	Q1
TL061CPSR	SO	PS	8	2000	330.0	16.4	8.35	6.6	2.4	12.0	16.0	Q1
TL061IDR	SOIC	D	8	2500	330.0	12.4	6.4	5.2	2.1	8.0	12.0	Q1
TL062ACDR	SOIC	D	8	2500	330.0	12.4	6.4	5.2	2.1	8.0	12.0	Q1
TL062ACPSR	SO	PS	8	2000	330.0	16.4	8.35	6.6	2.4	12.0	16.0	Q1
TL062BCDR	SOIC	D	8	2500	330.0	12.4	6.4	5.2	2.1	8.0	12.0	Q1
TL062CDR	SOIC	D	8	2500	330.0	12.4	6.4	5.2	2.1	8.0	12.0	Q1
TL062CPSR	SO	PS	8	2000	330.0	16.4	8.35	6.6	2.4	12.0	16.0	Q1
TL062CPWR	TSSOP	PW	8	2000	330.0	12.4	7.0	3.6	1.6	8.0	12.0	Q1
TL062IDR	SOIC	D	8	2500	330.0	12.4	6.4	5.2	2.1	8.0	12.0	Q1
TL062IPWR	TSSOP	PW	8	2000	330.0	12.4	7.0	3.6	1.6	8.0	12.0	Q1
TL064ACDR	SOIC	D	14	2500	330.0	16.4	6.5	9.0	2.1	8.0	16.0	Q1
TL064BCDR	SOIC	D	14	2500	330.0	16.4	6.5	9.0	2.1	8.0	16.0	Q1
TL064CDR	SOIC	D	14	2500	330.0	16.4	6.5	9.0	2.1	8.0	16.0	Q1
TL064CDR	SOIC	D	14	2500	330.0	16.4	6.5	9.0	2.1	8.0	16.0	Q1

Device	Package Type	Package Drawing	Pins	SPQ	Reel Diameter (mm)	Reel Width W1 (mm)	A0 (mm)	B0 (mm)	K0 (mm)	P1 (mm)	W (mm)	Pin1 Quadrant
TL064CDR	SOIC	D	14	2500	330.0	16.4	6.5	9.0	2.1	8.0	16.0	Q1
TL064CNSR	SOP	NS	14	2000	330.0	16.4	8.1	10.4	2.5	12.0	16.0	Q1
TL064CPWR	TSSOP	PW	14	2000	330.0	12.4	6.9	5.6	1.6	8.0	12.0	Q1
TL064CPWR	TSSOP	PW	14	2000	330.0	12.4	6.9	5.6	1.6	8.0	12.0	Q1
TL064CPWR	TSSOP	PW	14	2000	330.0	12.4	6.9	5.6	1.6	8.0	12.0	Q1
TL064CPWRG4	TSSOP	PW	14	2000	330.0	12.4	6.9	5.6	1.6	8.0	12.0	Q1
TL064CPWRG4	TSSOP	PW	14	2000	330.0	12.4	6.9	5.6	1.6	8.0	12.0	Q1
TL064IDR	SOIC	D	14	2500	330.0	16.4	6.5	9.0	2.1	8.0	16.0	Q1
TL064INSR	SOP	NS	14	2000	330.0	16.4	8.1	10.4	2.5	12.0	16.0	Q1
TL064IPWR	TSSOP	PW	14	2000	330.0	12.4	6.9	5.6	1.6	8.0	12.0	Q1
TL064IPWR	TSSOP	PW	14	2000	330.0	12.4	6.9	5.6	1.6	8.0	12.0	Q1

TAPE AND REEL BOX DIMENSIONS

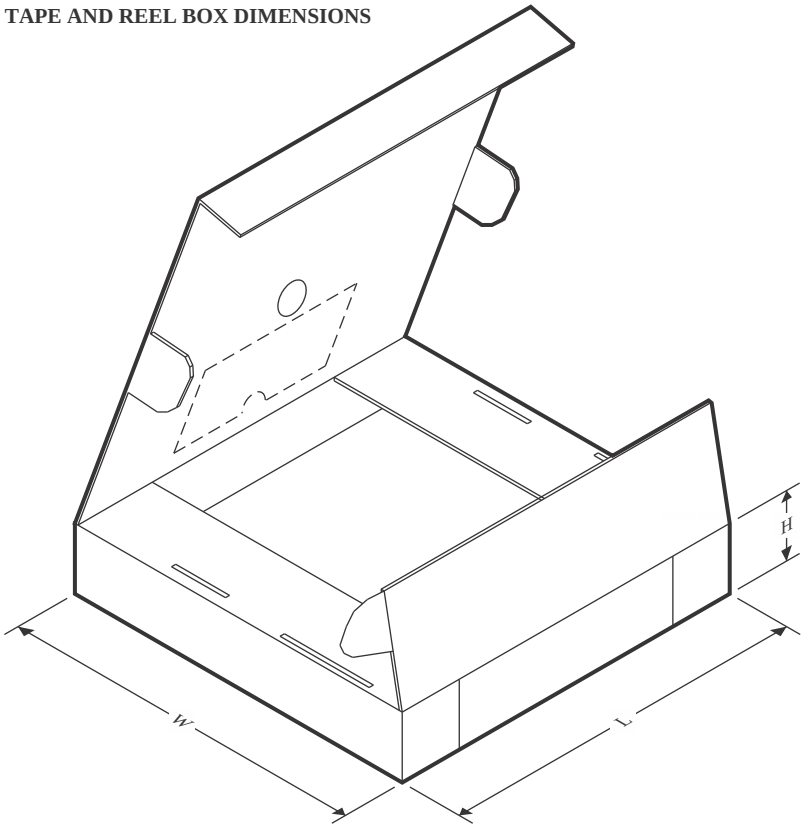

*All dimensions are nominal

Device	Package Type	Package Drawing	Pins	SPQ	Length (mm)	Width (mm)	Height (mm)
TL061ACDR	SOIC	D	8	2500	353.0	353.0	32.0
TL061CDR	SOIC	D	8	2500	353.0	353.0	32.0
TL061CPSR	SO	PS	8	2000	353.0	353.0	32.0
TL061IDR	SOIC	D	8	2500	353.0	353.0	32.0
TL062ACDR	SOIC	D	8	2500	353.0	353.0	32.0
TL062ACPSR	SO	PS	8	2000	353.0	353.0	32.0
TL062BCDR	SOIC	D	8	2500	353.0	353.0	32.0
TL062CDR	SOIC	D	8	2500	353.0	353.0	32.0
TL062CPSR	SO	PS	8	2000	353.0	353.0	32.0
TL062CPWR	TSSOP	PW	8	2000	353.0	353.0	32.0
TL062IDR	SOIC	D	8	2500	353.0	353.0	32.0
TL062IPWR	TSSOP	PW	8	2000	353.0	353.0	32.0
TL064ACDR	SOIC	D	14	2500	353.0	353.0	32.0
TL064BCDR	SOIC	D	14	2500	353.0	353.0	32.0
TL064CDR	SOIC	D	14	2500	353.0	353.0	32.0
TL064CDR	SOIC	D	14	2500	333.2	345.9	28.6
TL064CDR	SOIC	D	14	2500	353.0	353.0	32.0
TL064CNSR	SOP	NS	14	2000	353.0	353.0	32.0

Device	Package Type	Package Drawing	Pins	SPQ	Length (mm)	Width (mm)	Height (mm)
TL064CPWR	TSSOP	PW	14	2000	356.0	356.0	35.0
TL064CPWR	TSSOP	PW	14	2000	353.0	353.0	32.0
TL064CPWR	TSSOP	PW	14	2000	353.0	353.0	32.0
TL064CPWRG4	TSSOP	PW	14	2000	356.0	356.0	35.0
TL064CPWRG4	TSSOP	PW	14	2000	356.0	356.0	35.0
TL064IDR	SOIC	D	14	2500	353.0	353.0	32.0
TL064INSR	SOP	NS	14	2000	353.0	353.0	32.0
TL064IPWR	TSSOP	PW	14	2000	353.0	353.0	32.0
TL064IPWR	TSSOP	PW	14	2000	353.0	353.0	32.0

TUBE

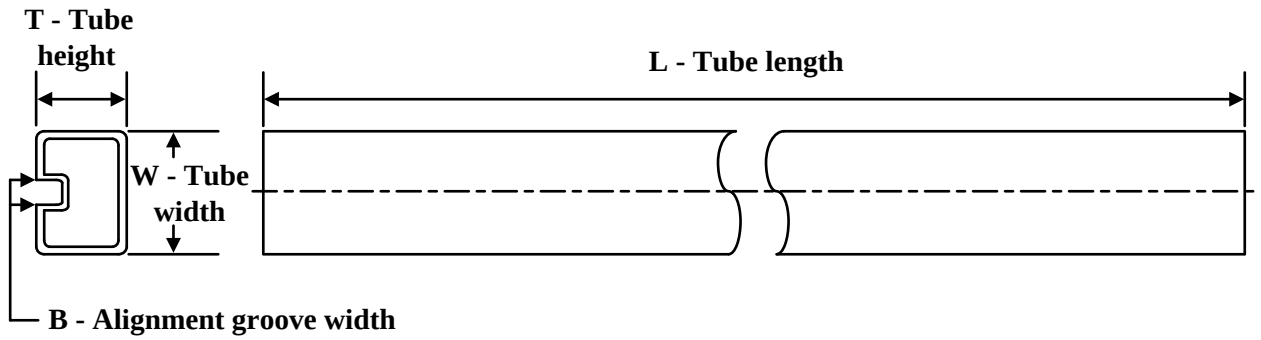

*All dimensions are nominal

Device	Package Name	Package Type	Pins	SPQ	L (mm)	W (mm)	T (µm)	B (mm)
81023022A	FK	LCCC	20	55	506.98	12.06	2030	NA
81023032A	FK	LCCC	20	55	506.98	12.06	2030	NA
8102303DA	W	CFP	14	25	506.98	26.16	6220	NA
TL061ACP	P	PDIP	8	50	506	13.97	11230	4.32
TL061ACP.A	P	PDIP	8	50	506	13.97	11230	4.32
TL061BCP	P	PDIP	8	50	506	13.97	11230	4.32
TL061BCP.A	P	PDIP	8	50	506	13.97	11230	4.32
TL061CP	P	PDIP	8	50	506	13.97	11230	4.32
TL061CP.A	P	PDIP	8	50	506	13.97	11230	4.32
TL061IP	P	PDIP	8	50	506	13.97	11230	4.32
TL061IP.A	P	PDIP	8	50	506	13.97	11230	4.32
TL062ACP	P	PDIP	8	50	506	13.97	11230	4.32
TL062ACP.A	P	PDIP	8	50	506	13.97	11230	4.32
TL062BCP	P	PDIP	8	50	506	13.97	11230	4.32
TL062BCP.A	P	PDIP	8	50	506	13.97	11230	4.32
TL062CP	P	PDIP	8	50	506	13.97	11230	4.32
TL062CP.A	P	PDIP	8	50	506	13.97	11230	4.32
TL062CPS	PS	SOP	8	80	530	10.5	4000	4.1
TL062CPS.A	PS	SOP	8	80	530	10.5	4000	4.1
TL062IP	P	PDIP	8	50	506	13.97	11230	4.32
TL062IP.A	P	PDIP	8	50	506	13.97	11230	4.32
TL062MFKB	FK	LCCC	20	55	506.98	12.06	2030	NA
TL062MFKB.A	FK	LCCC	20	55	506.98	12.06	2030	NA
TL064ACN	N	PDIP	14	25	506	13.97	11230	4.32
TL064ACN.A	N	PDIP	14	25	506	13.97	11230	4.32
TL064BCN	N	PDIP	14	25	506	13.97	11230	4.32
TL064BCN.A	N	PDIP	14	25	506	13.97	11230	4.32
TL064CN	N	PDIP	14	25	506	13.97	11230	4.32
TL064CN.A	N	PDIP	14	25	506	13.97	11230	4.32

Device	Package Name	Package Type	Pins	SPQ	L (mm)	W (mm)	T (µm)	B (mm)
TL064IN	N	PDIP	14	25	506	13.97	11230	4.32
TL064IN.A	N	PDIP	14	25	506	13.97	11230	4.32
TL064INS	NS	SOP	14	50	530	10.5	4000	4.1
TL064INS.A	NS	SOP	14	50	530	10.5	4000	4.1
TL064MFKB	FK	LCCC	20	55	506.98	12.06	2030	NA
TL064MFKB.A	FK	LCCC	20	55	506.98	12.06	2030	NA
TL064MWB	W	CFP	14	25	506.98	26.16	6220	NA
TL064MWB.A	W	CFP	14	25	506.98	26.16	6220	NA

PACKAGE OUTLINE

JG0008A

CDIP - 5.08 mm max height

CERAMIC DUAL IN-LINE PACKAGE

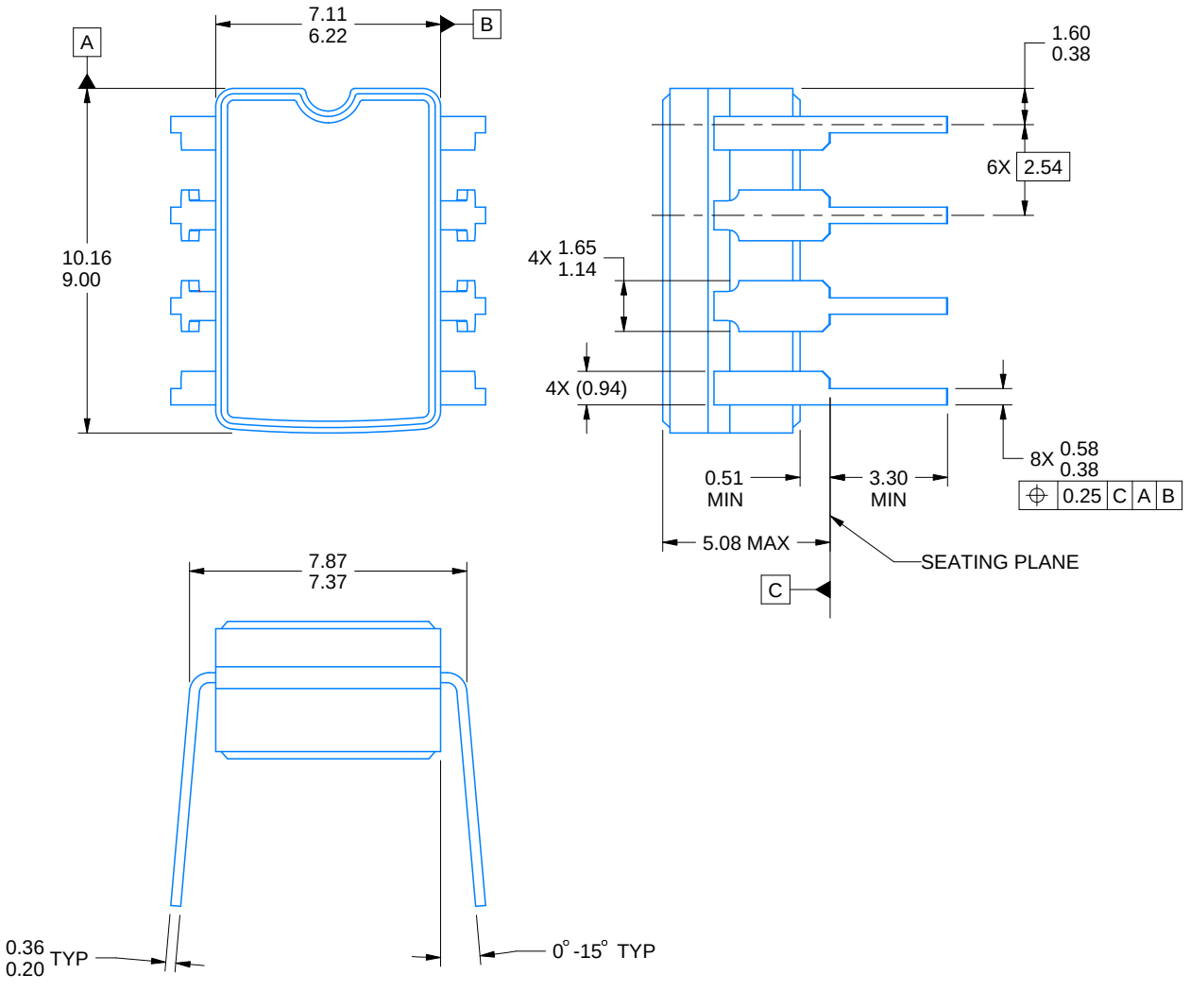

4230036/A 09/2023

NOTES:

1. All linear dimensions are in millimeters. Any dimensions in parenthesis are for reference only. Dimensioning and tolerancing per ASME Y14.5M.
2. This drawing is subject to change without notice.
3. This package can be hermetically sealed with a ceramic lid using glass frit.
4. Index point is provided on cap for terminal identification.
5. Falls within MIL STD 1835 GDIP1-T8

EXAMPLE BOARD LAYOUT

JG0008A

CDIP - 5.08 mm max height

CERAMIC DUAL IN-LINE PACKAGE

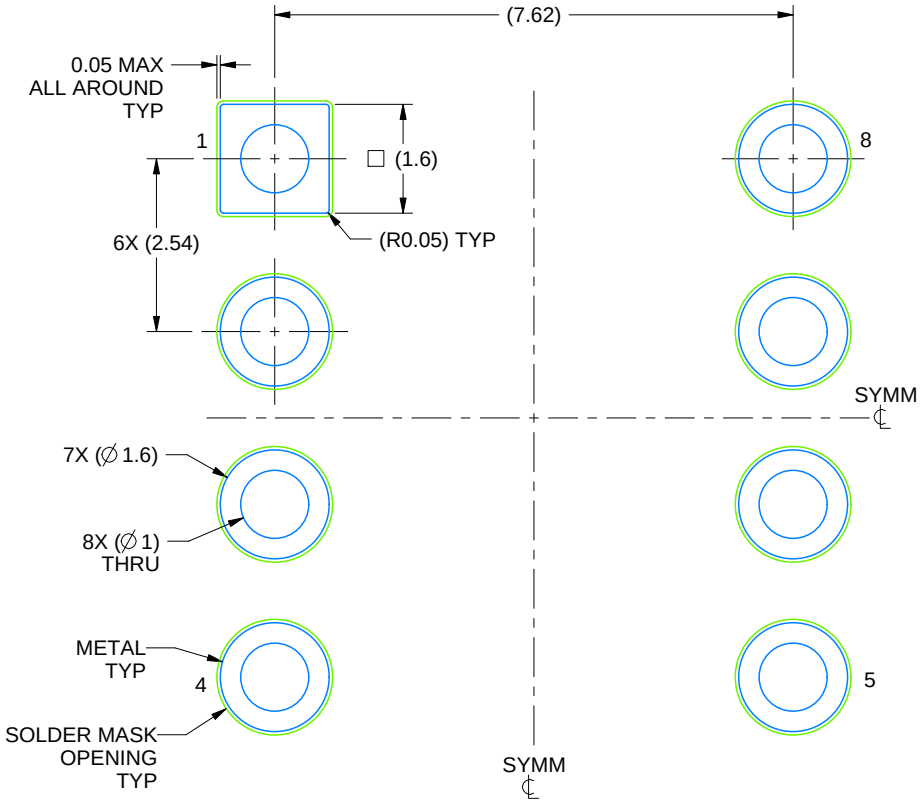

LAND PATTERN EXAMPLE
NON SOLDER MASK DEFINED
SCALE: 9X

4230036/A 09/2023

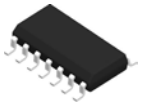

PACKAGE OUTLINE

D0014A

SOIC - 1.75 mm max height

SMALL OUTLINE INTEGRATED CIRCUIT

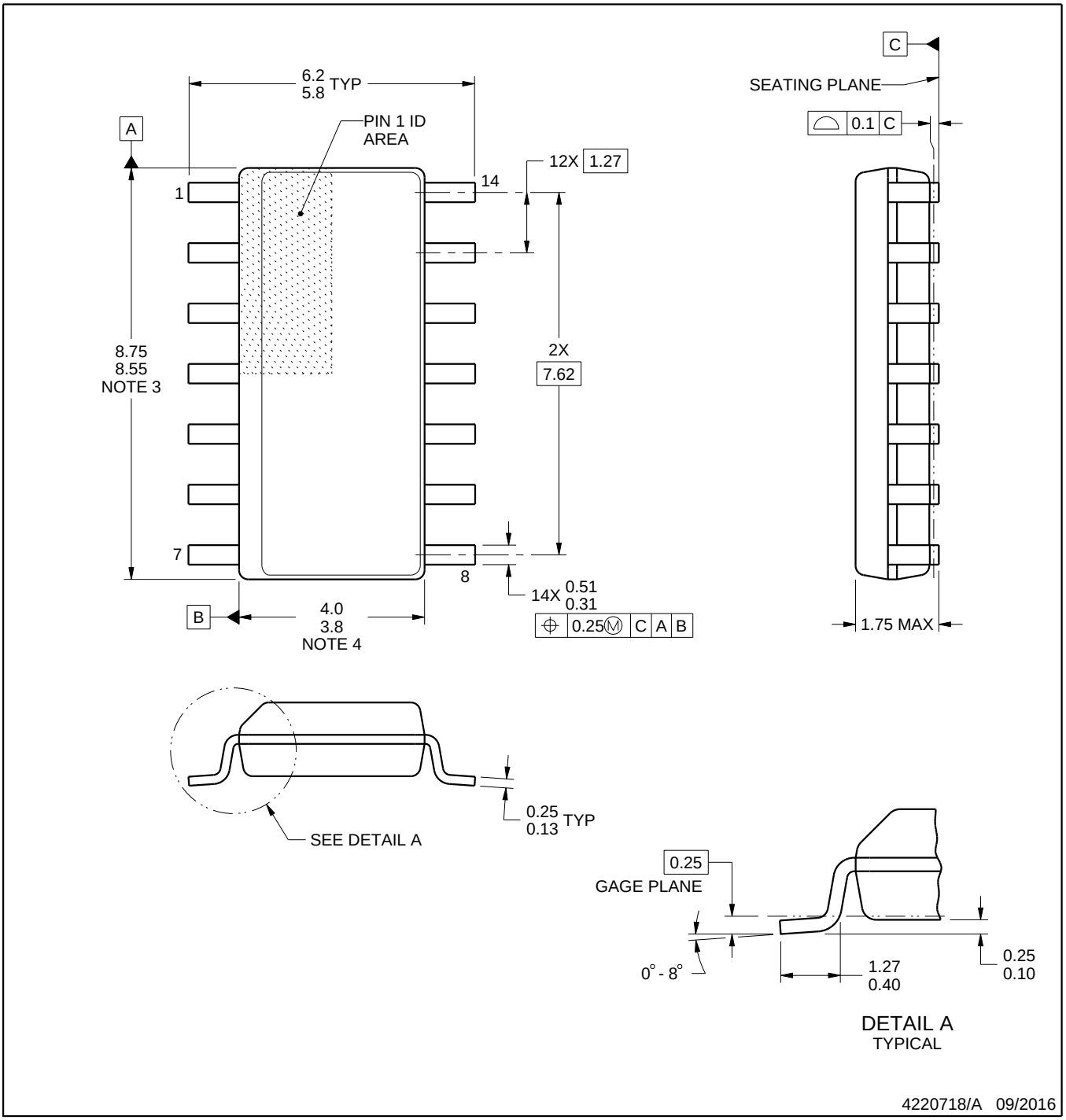

NOTES:

1. All linear dimensions are in millimeters. Dimensions in parenthesis are for reference only. Dimensioning and tolerancing per ASME Y14.5M.
2. This drawing is subject to change without notice.
3. This dimension does not include mold flash, protrusions, or gate burrs. Mold flash, protrusions, or gate burrs shall not exceed 0.15 mm, per side.
4. This dimension does not include interlead flash. Interlead flash shall not exceed 0.43 mm, per side.
5. Reference JEDEC registration MS-012, variation AB.

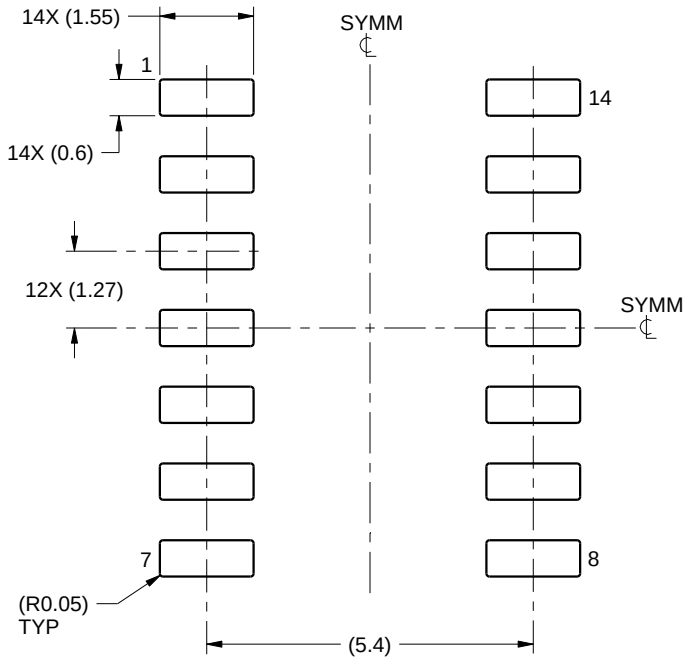

LAND PATTERN EXAMPLE
SCALE:8X

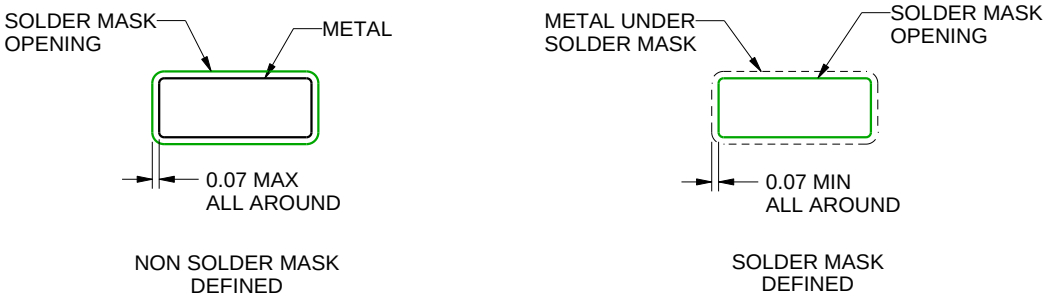

SOLDER MASK DETAILS

4220718/A 09/2016

NOTES: (continued)

6. Publication IPC-7351 may have alternate designs.
7. Solder mask tolerances between and around signal pads can vary based on board fabrication site.

EXAMPLE STENCIL DESIGN

D0014A

SOIC - 1.75 mm max height

SMALL OUTLINE INTEGRATED CIRCUIT

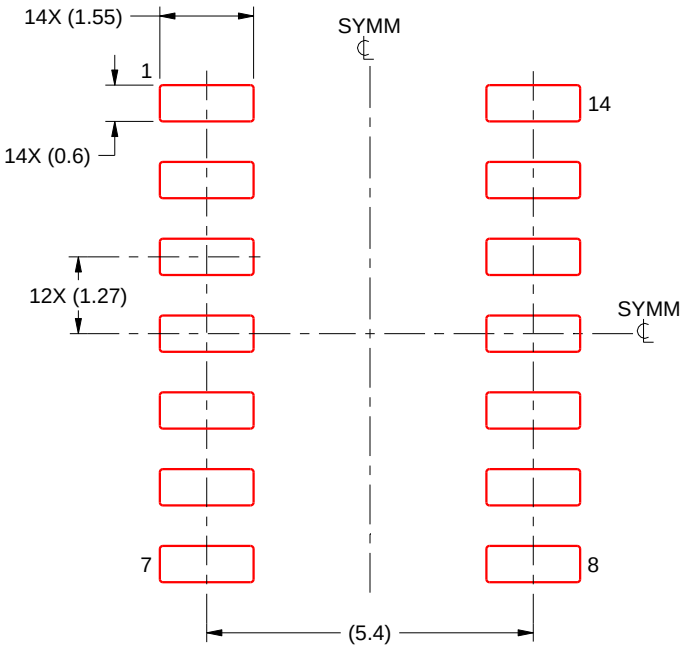

SOLDER PASTE EXAMPLE
BASED ON 0.125 mm THICK STENCIL
SCALE:8X

4220718/A 09/2016

NOTES: (continued)

8. Laser cutting apertures with trapezoidal walls and rounded corners may offer better paste release. IPC-7525 may have alternate design recommendations.
9. Board assembly site may have different recommendations for stencil design.

MECHANICAL DATA

NS (R-PDSO-G)** **PLASTIC SMALL-OUTLINE PACKAGE**

14-PINS SHOWN

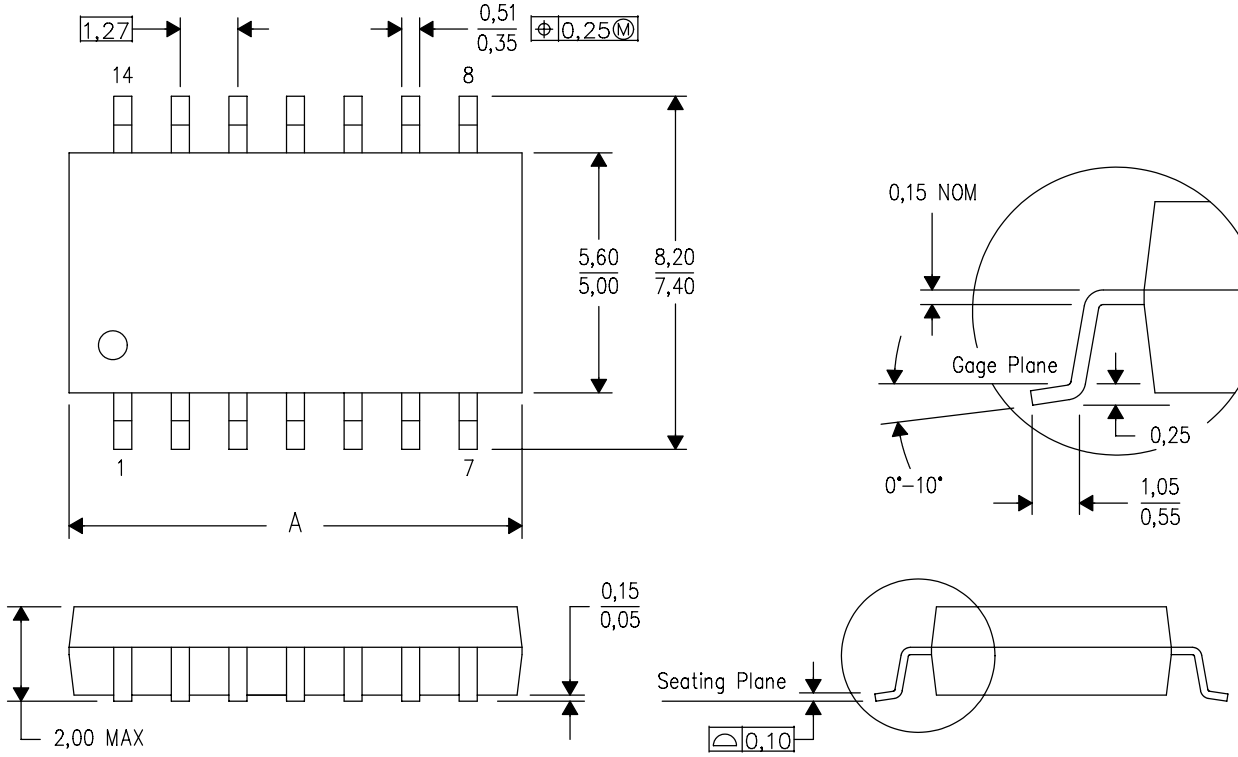

DIM \ PINS **	14	16	20	24
A MAX	10,50	10,50	12,90	15,30
A MIN	9,90	9,90	12,30	14,70

4040062/C 03/03

NOTES:
A. All linear dimensions are in millimeters.
B. This drawing is subject to change without notice.
C. Body dimensions do not include mold flash or protrusion, not to exceed 0,15.

W (R–GDFP–F14) CERAMIC DUAL FLATPACK

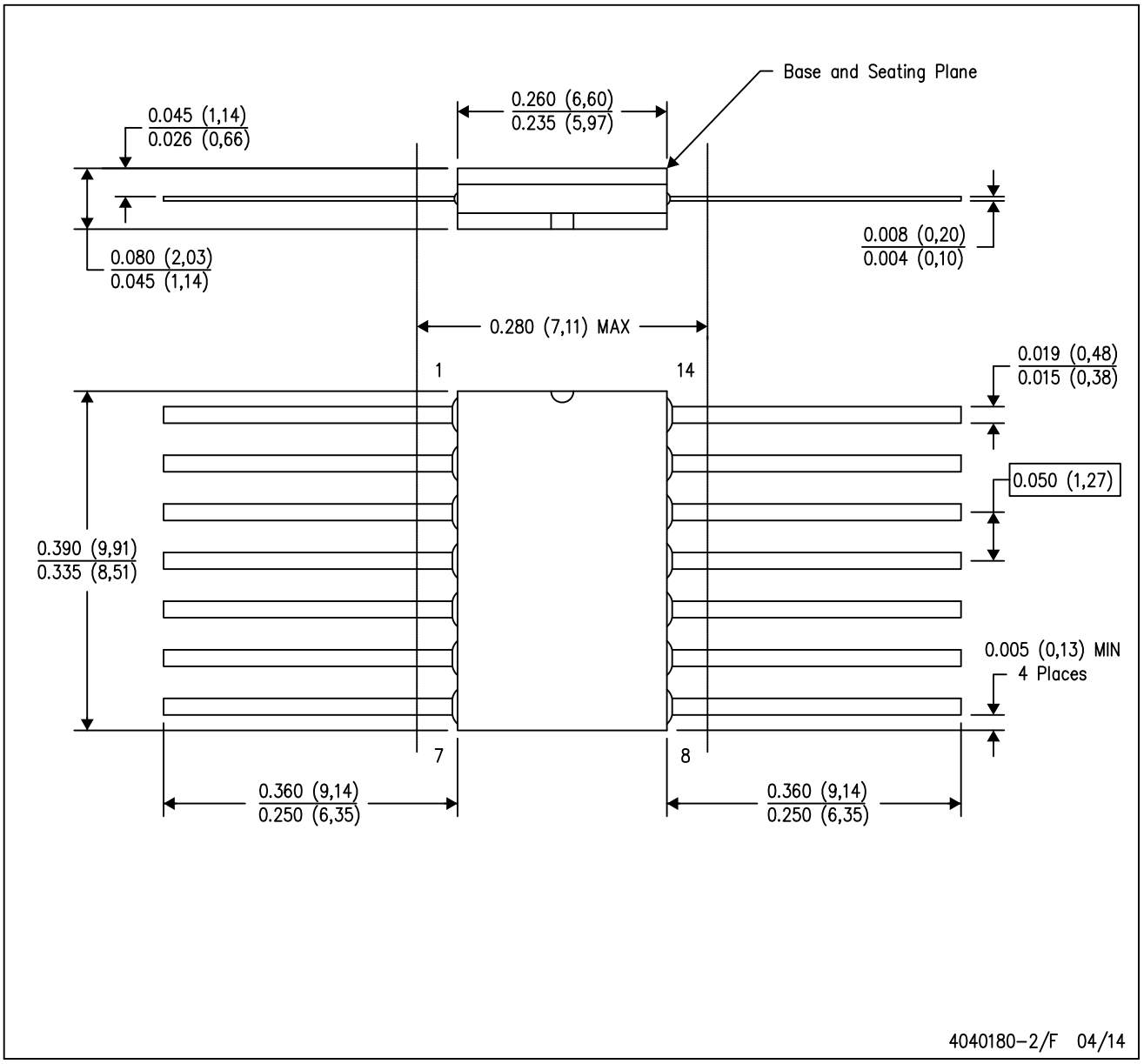

NOTES:
A. All linear dimensions are in inches (millimeters).
B. This drawing is subject to change without notice.
C. This package can be hermetically sealed with a ceramic lid using glass frit.
D. Index point is provided on cap for terminal identification only.
E. Falls within MIL STD 1835 GDFP1–F14

GENERIC PACKAGE VIEW

FK 20

LCCC - 2.03 mm max height

8.89 x 8.89, 1.27 mm pitch

LEADLESS CERAMIC CHIP CARRIER

This image is a representation of the package family, actual package may vary.
Refer to the product data sheet for package details.

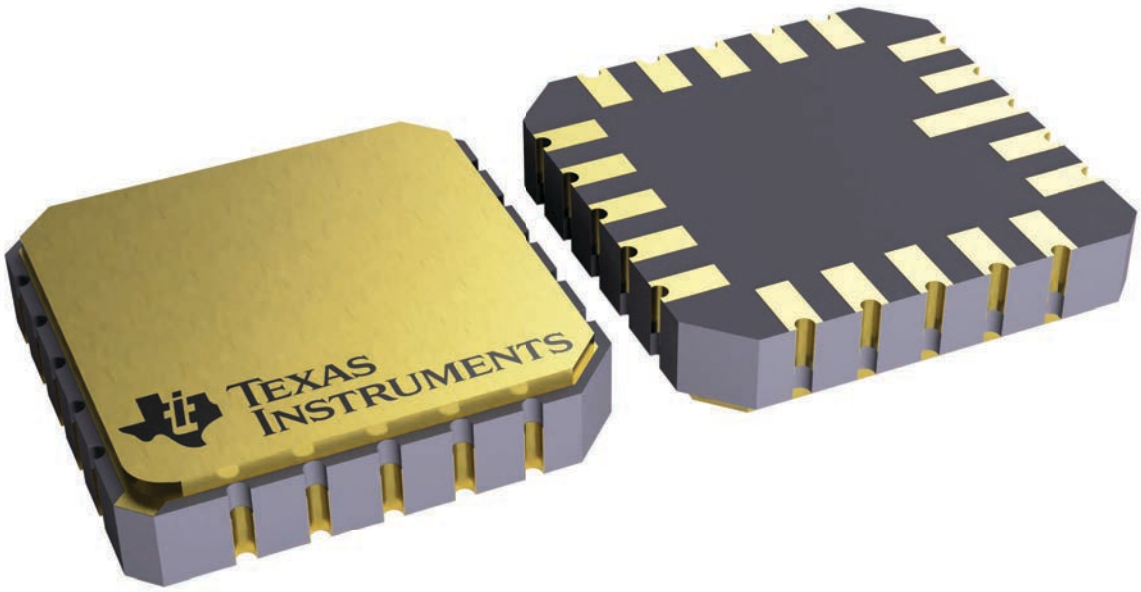

4229370VA\

GENERIC PACKAGE VIEW

J 14 CDIP - 5.08 mm max height

CERAMIC DUAL IN LINE PACKAGE

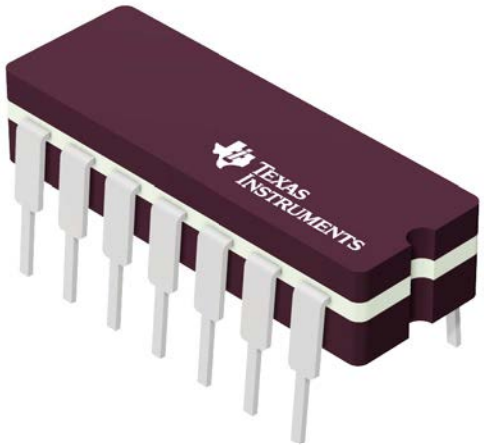

Images above are just a representation of the package family, actual package may vary.
Refer to the product data sheet for package details.

4040083-5/G



PACKAGE OUTLINE

J0014A

CDIP - 5.08 mm max height

CERAMIC DUAL IN LINE PACKAGE

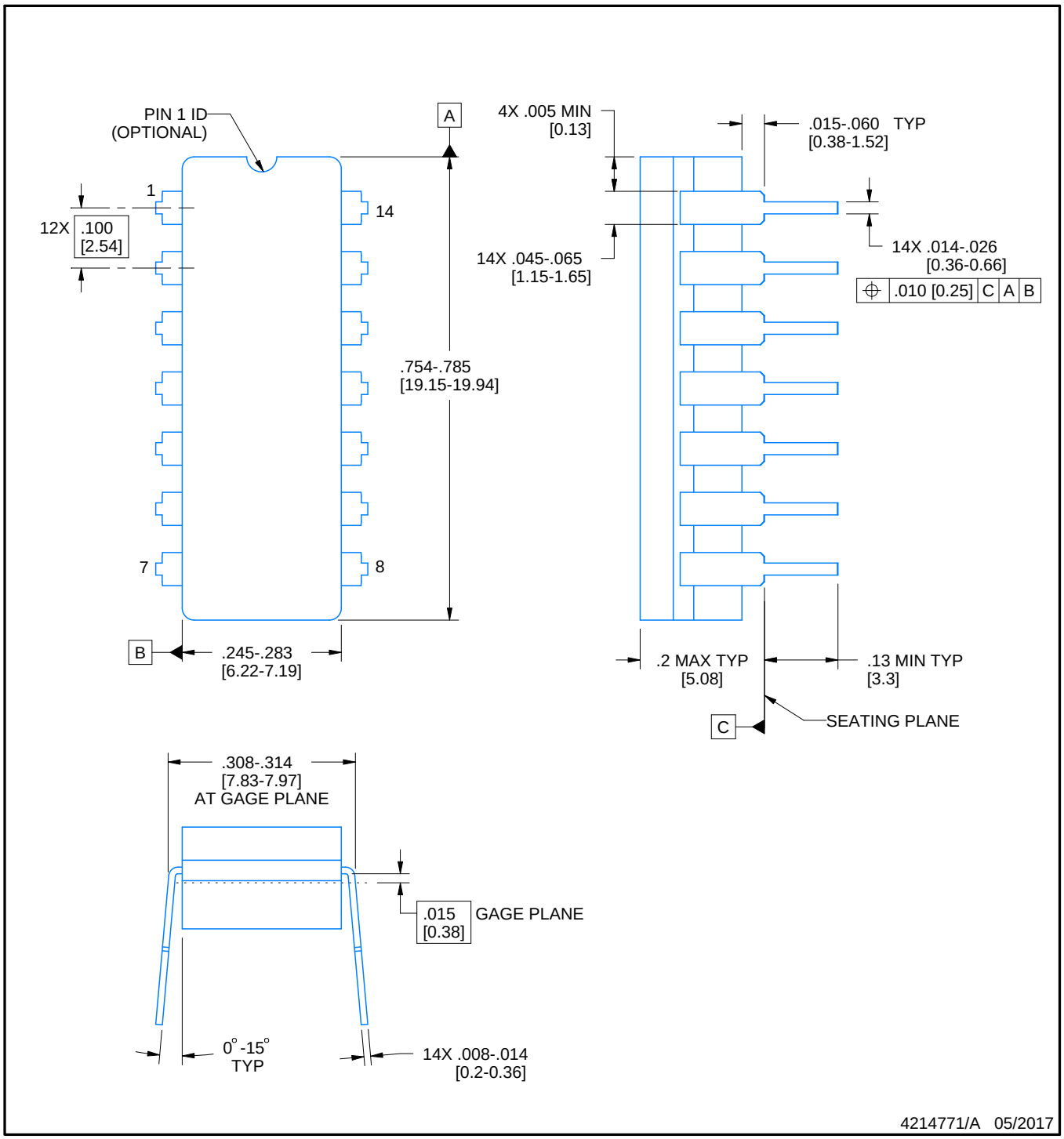

NOTES:

1. All controlling linear dimensions are in inches. Dimensions in brackets are in millimeters. Any dimension in brackets or parenthesis are for reference only. Dimensioning and tolerancing per ASME Y14.5M.
2. This drawing is subject to change without notice.
3. This package is hermitically sealed with a ceramic lid using glass frit.
4. Index point is provided on cap for terminal identification only and on press ceramic glass frit seal only.
5. Falls within MIL-STD-1835 and GDIP1-T14.

EXAMPLE BOARD LAYOUT

J0014A

CDIP - 5.08 mm max height

CERAMIC DUAL IN LINE PACKAGE

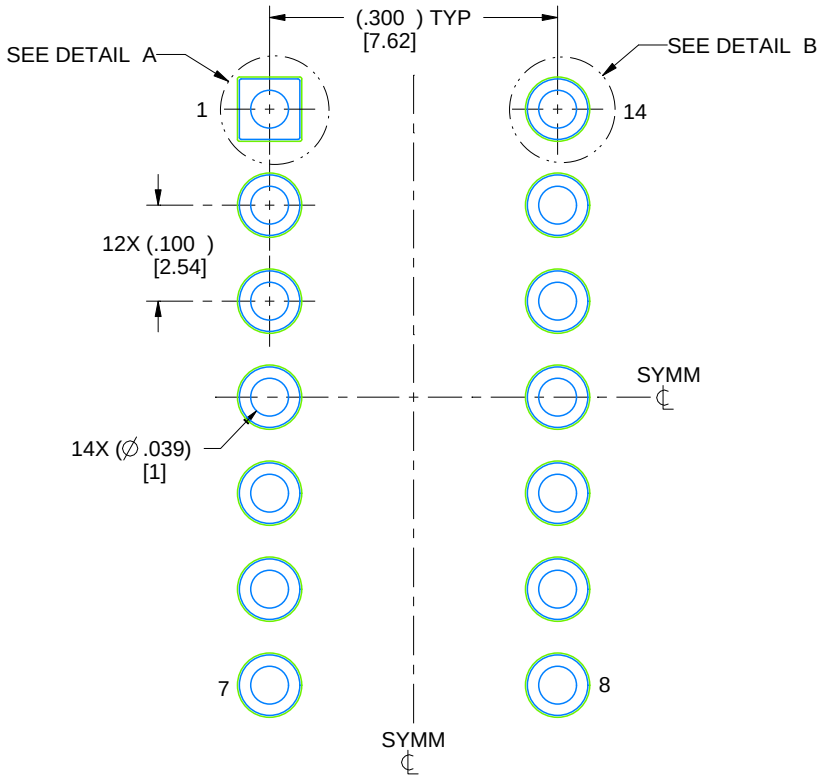

LAND PATTERN EXAMPLE
NON-SOLDER MASK DEFINED
SCALE: 5X

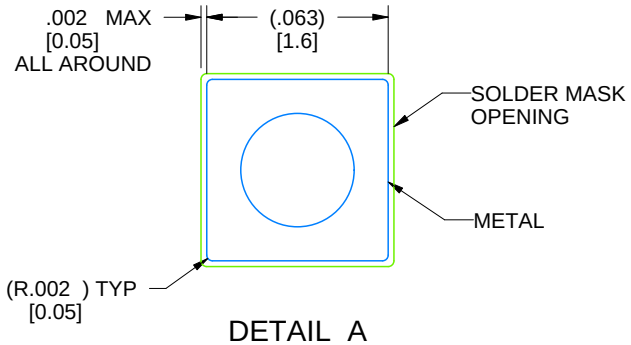

DETAIL A
SCALE: 15X

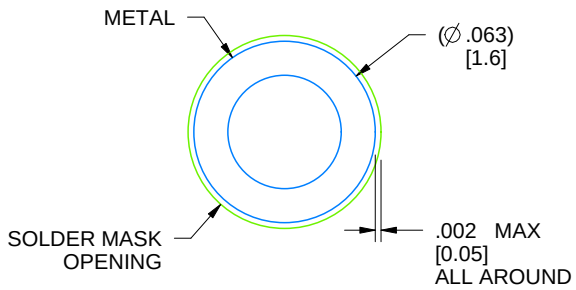

DETAIL B
13X, SCALE: 15X

4214771/A 05/2017

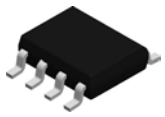

PACKAGE OUTLINE

D0008A

SOIC - 1.75 mm max height

SMALL OUTLINE INTEGRATED CIRCUIT

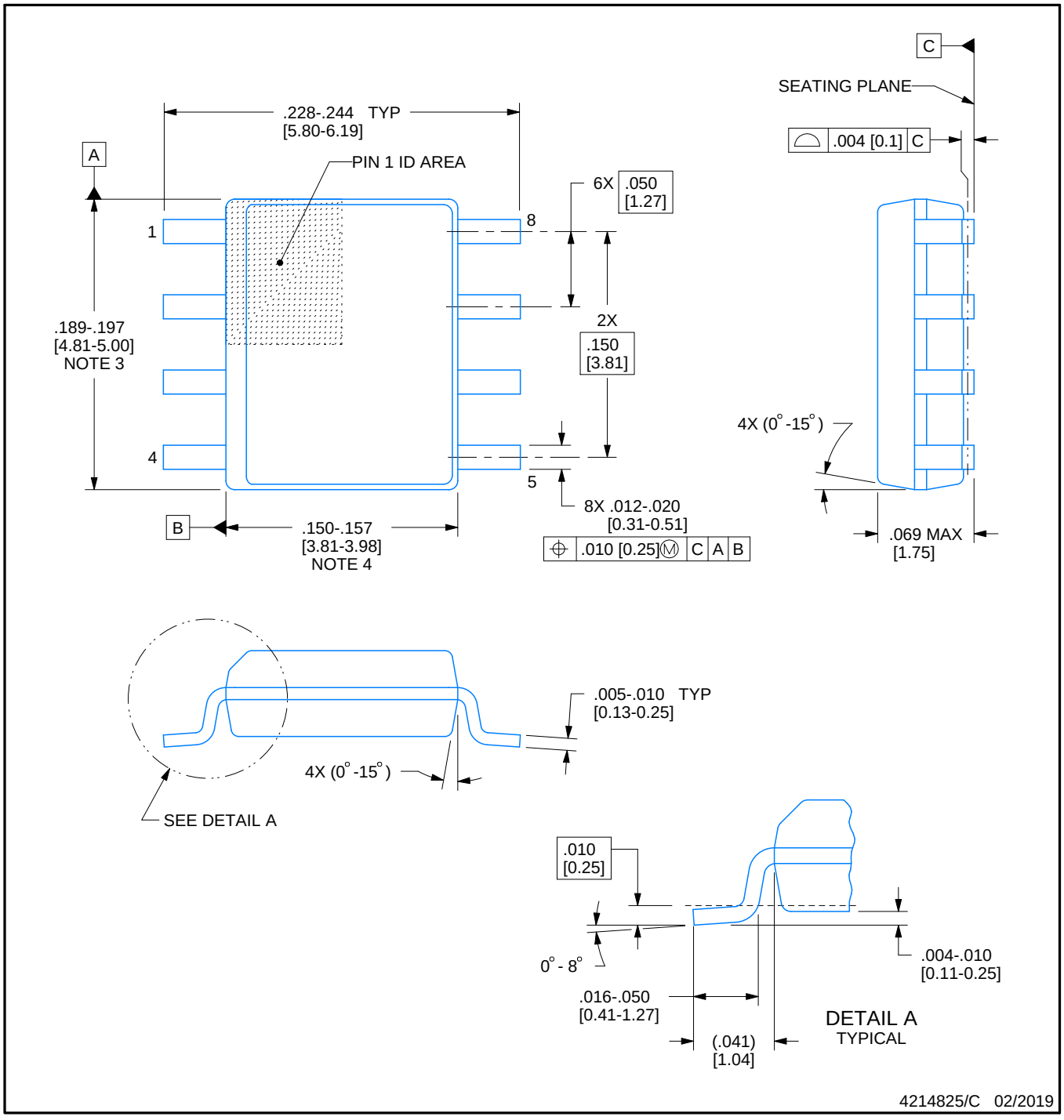

NOTES:

1. Linear dimensions are in inches [millimeters]. Dimensions in parenthesis are for reference only. Controlling dimensions are in inches. Dimensioning and tolerancing per ASME Y14.5M.
2. This drawing is subject to change without notice.
3. This dimension does not include mold flash, protrusions, or gate burrs. Mold flash, protrusions, or gate burrs shall not exceed .006 [0.15] per side.
4. This dimension does not include interlead flash.
5. Reference JEDEC registration MS-012, variation AA.

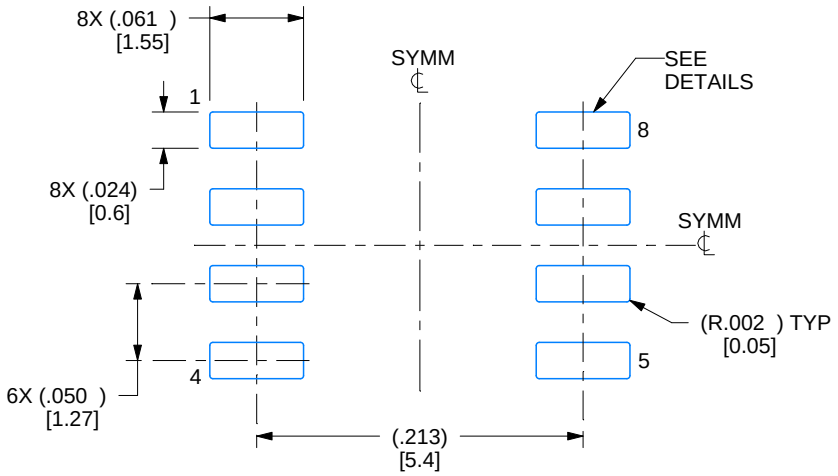

LAND PATTERN EXAMPLE
EXPOSED METAL SHOWN
SCALE:8X

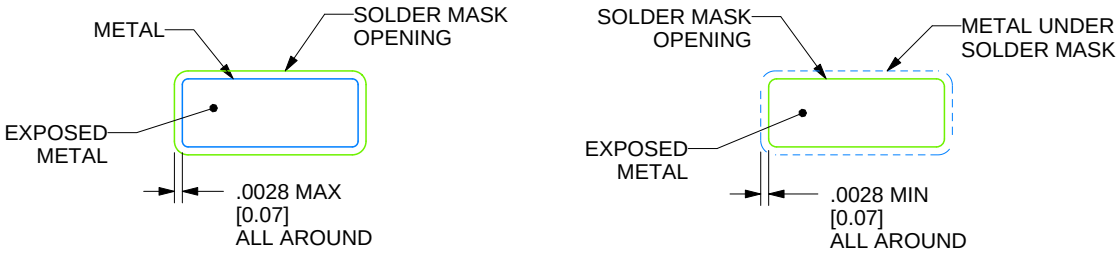

SOLDER MASK DETAILS

4214825/C 02/2019

NOTES: (continued)

6. Publication IPC-7351 may have alternate designs.
7. Solder mask tolerances between and around signal pads can vary based on board fabrication site.

EXAMPLE STENCIL DESIGN

D0008A

SOIC - 1.75 mm max height

SMALL OUTLINE INTEGRATED CIRCUIT

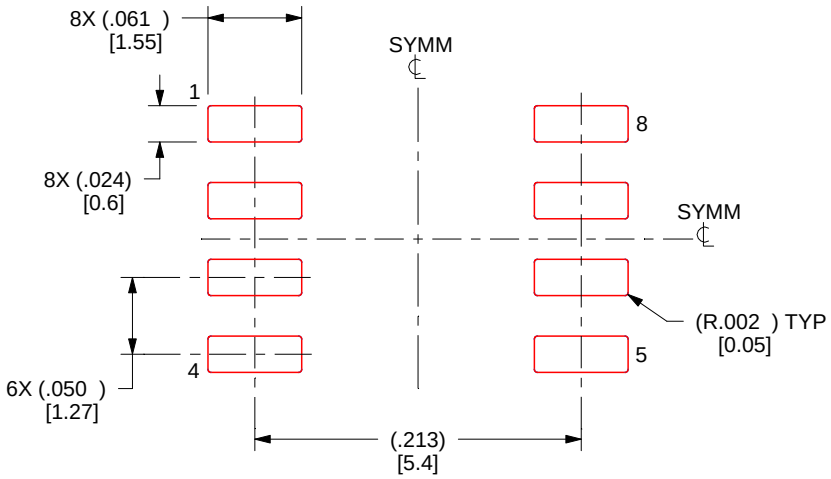

SOLDER PASTE EXAMPLE
BASED ON .005 INCH [0.125 MM] THICK STENCIL
SCALE:8X

4214825/C 02/2019

NOTES: (continued)

8. Laser cutting apertures with trapezoidal walls and rounded corners may offer better paste release. IPC-7525 may have alternate design recommendations.
9. Board assembly site may have different recommendations for stencil design.

MECHANICAL DATA

PS (R-PDSO-G8) **PLASTIC SMALL-OUTLINE PACKAGE**

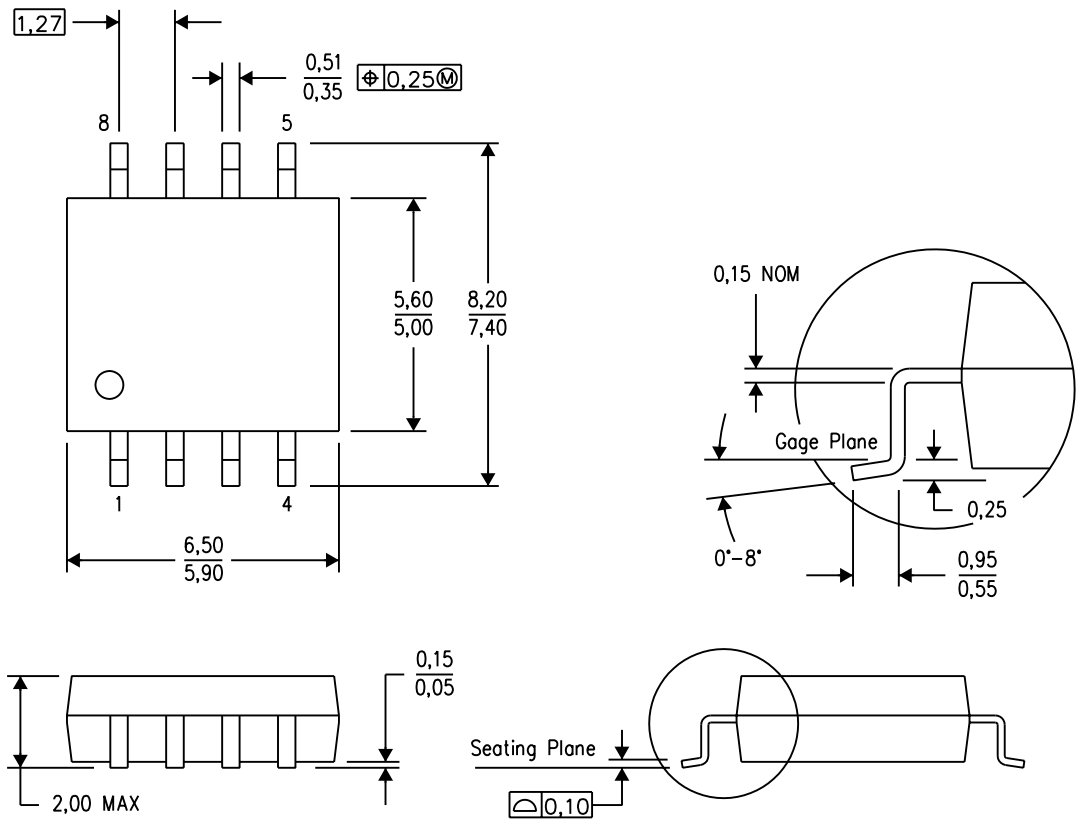

4040063/C 03/03

NOTES:
A. All linear dimensions are in millimeters.
B. This drawing is subject to change without notice.
C. Body dimensions do not include mold flash or protrusion, not to exceed 0,15.

PS (R–PDSO–G8) PLASTIC SMALL OUTLINE

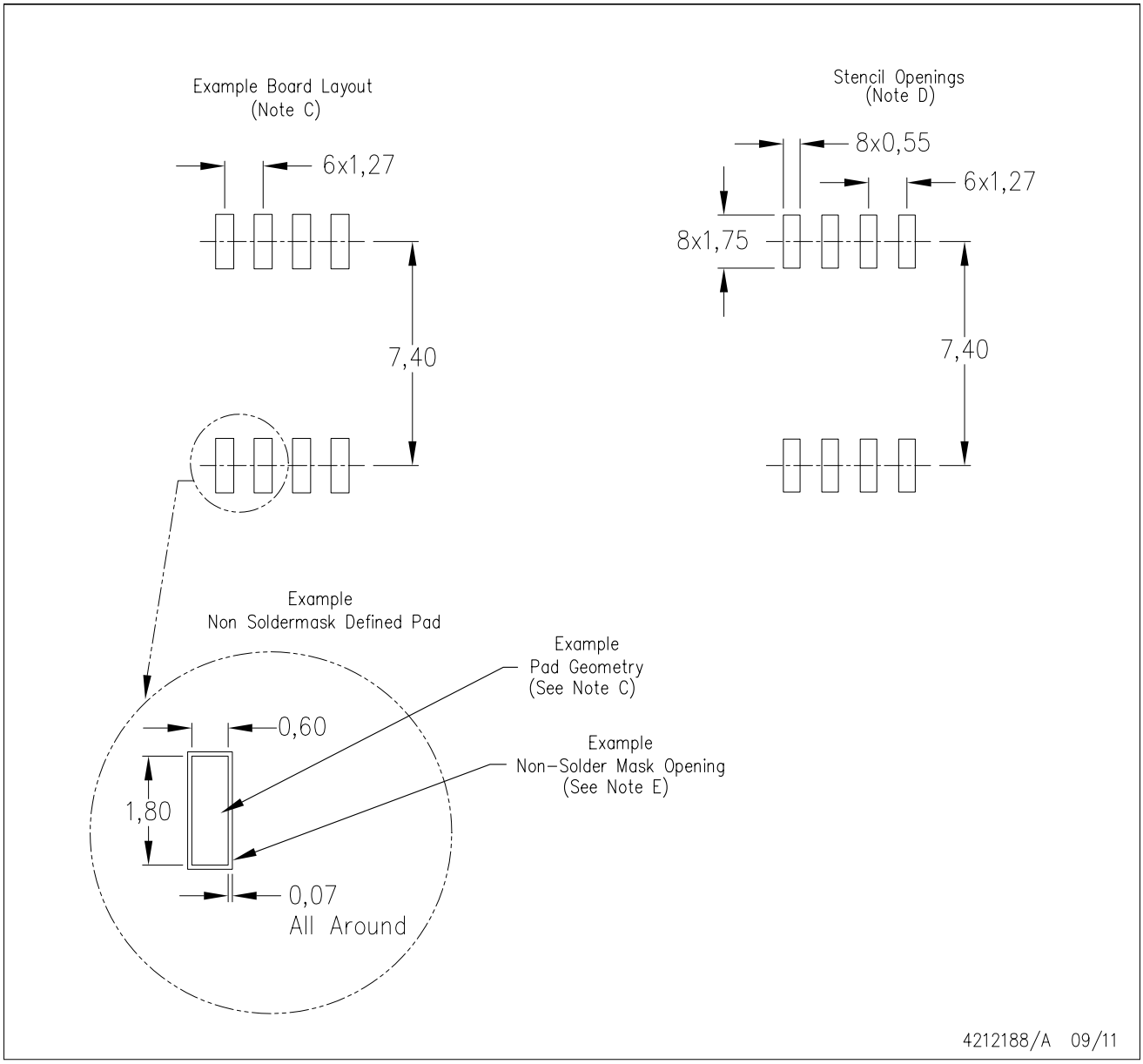

NOTES:
A. All linear dimensions are in millimeters.
B. This drawing is subject to change without notice.
C. Publication IPC–7351 is recommended for alternate designs.
D. Laser cutting apertures with trapezoidal walls and also rounding corners will offer better paste release. Customers should contact their board assembly site for stencil design recommendations. Refer to IPC–7525 for other stencil recommendations.
E. Customers should contact their board fabrication site for solder mask tolerances between and around signal pads.

P (R–PDIP–T8) PLASTIC DUAL–IN–LINE PACKAGE

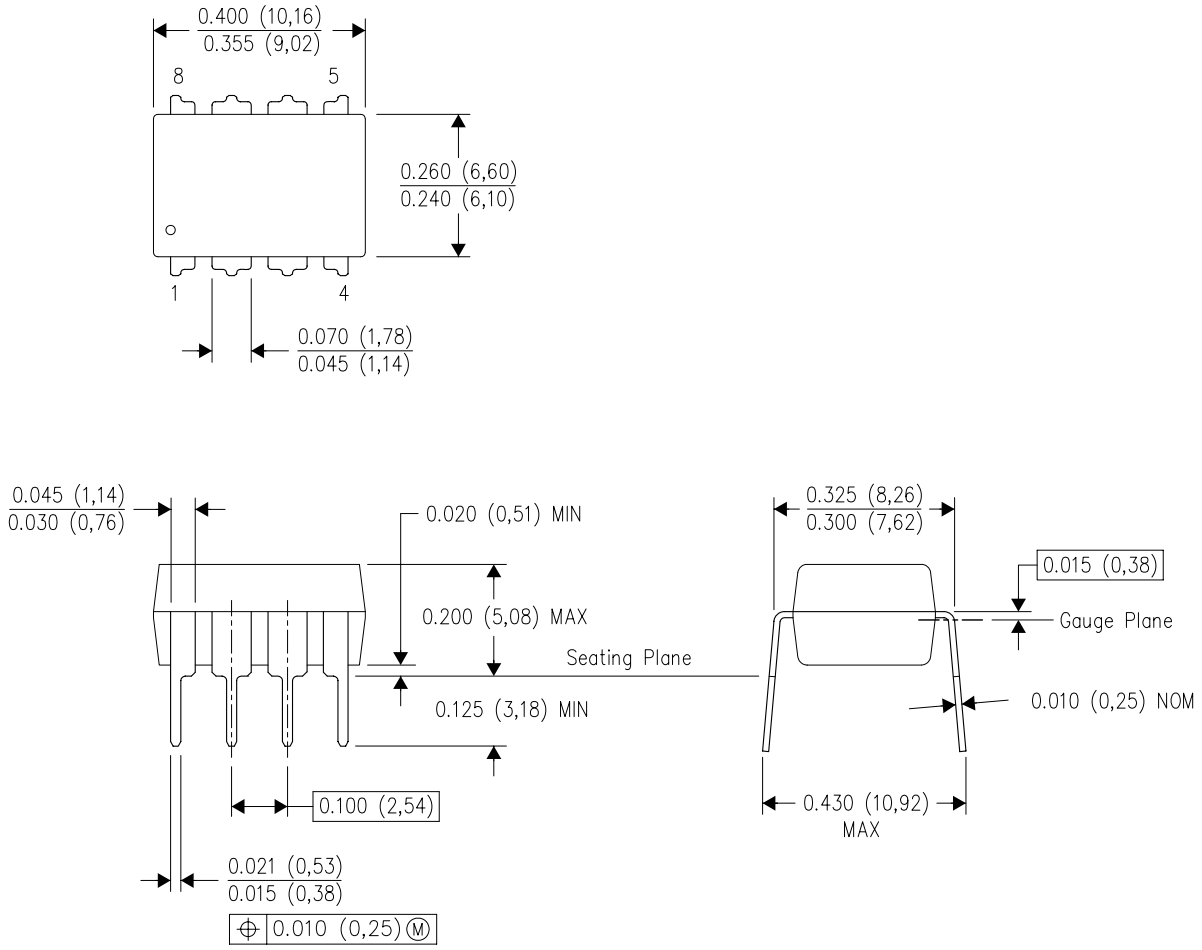

NOTES:
A. All linear dimensions are in inches (millimeters).
B. This drawing is subject to change without notice.
C. Falls within JEDEC MS–001 variation BA.

N (R–PDIP–T**)

PLASTIC DUAL–IN–LINE PACKAGE

16 PINS SHOWN

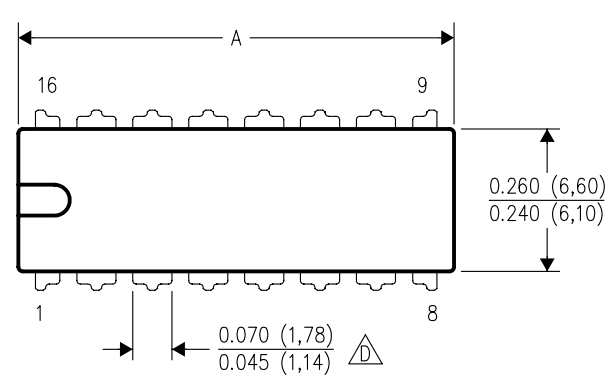

DIM \ PINS **	14	16	18	20
A MAX	0.775 (19,69)	0.775 (19,69)	0.920 (23,37)	1.060 (26,92)
A MIN	0.745 (18,92)	0.745 (18,92)	0.850 (21,59)	0.940 (23,88)
MS–001 VARIATION (C)	AA	BB	AC	AD

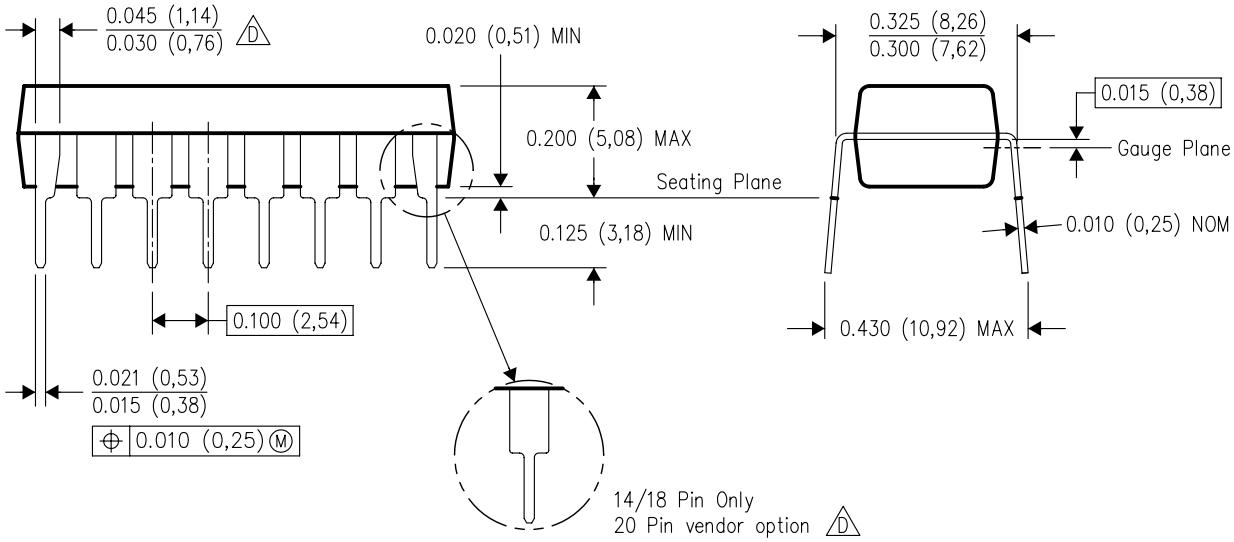

4040049/E 12/2002

NOTES:
A. All linear dimensions are in inches (millimeters).
B. This drawing is subject to change without notice.
C. Falls within JEDEC MS–001, except 18 and 20 pin minimum body length (Dim A).
D. The 20 pin end lead shoulder width is a vendor option, either half or full width.

PACKAGE OUTLINE

PW0014A

TSSOP - 1.2 mm max height

SMALL OUTLINE PACKAGE

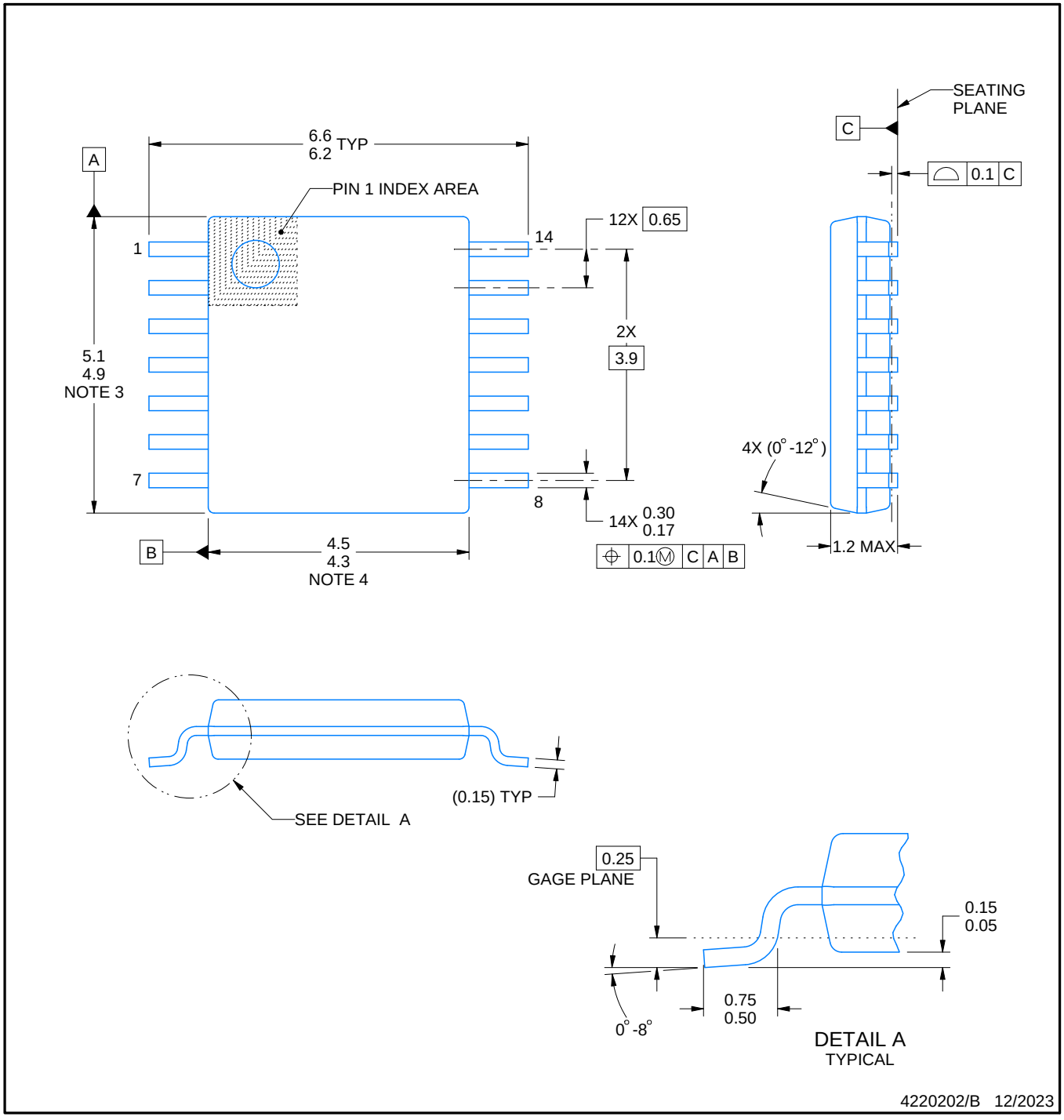

NOTES:

1. All linear dimensions are in millimeters. Any dimensions in parenthesis are for reference only. Dimensioning and tolerancing per ASME Y14.5M.
2. This drawing is subject to change without notice.
3. This dimension does not include mold flash, protrusions, or gate burrs. Mold flash, protrusions, or gate burrs shall not exceed 0.15 mm per side.
4. This dimension does not include interlead flash. Interlead flash shall not exceed 0.25 mm per side.
5. Reference JEDEC registration MO-153.

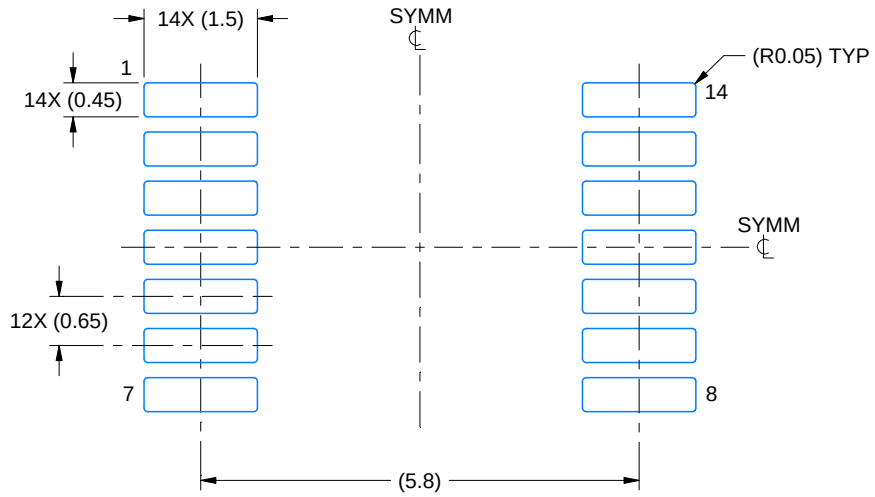

LAND PATTERN EXAMPLE
EXPOSED METAL SHOWN
SCALE: 10X

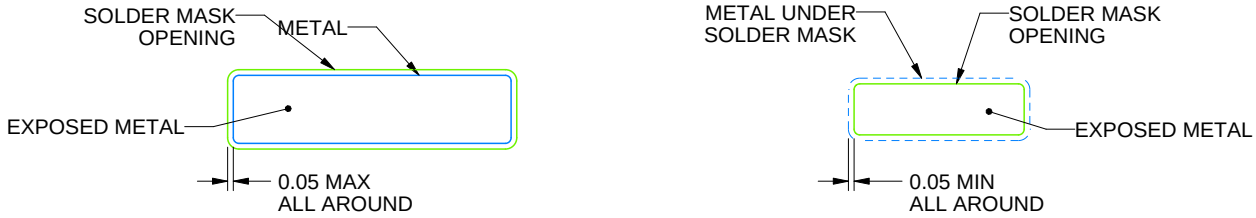

SOLDER MASK DETAILS

4220202/B 12/2023

NOTES: (continued)

6. Publication IPC-7351 may have alternate designs.
7. Solder mask tolerances between and around signal pads can vary based on board fabrication site.

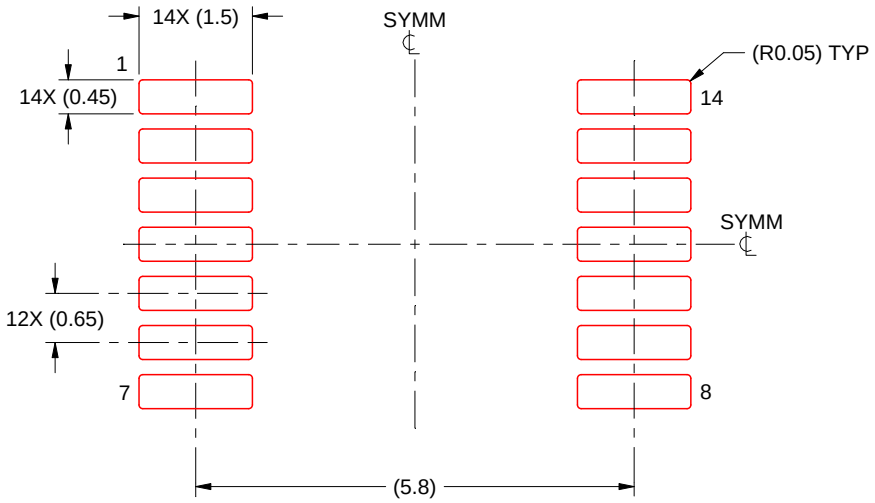

SOLDER PASTE EXAMPLE
BASED ON 0.125 mm THICK STENCIL
SCALE: 10X

4220202/B 12/2023

NOTES: (continued)

8. Laser cutting apertures with trapezoidal walls and rounded corners may offer better paste release. IPC-7525 may have alternate design recommendations.
9. Board assembly site may have different recommendations for stencil design.

PACKAGE OUTLINE

PW0008A

TSSOP - 1.2 mm max height

SMALL OUTLINE PACKAGE

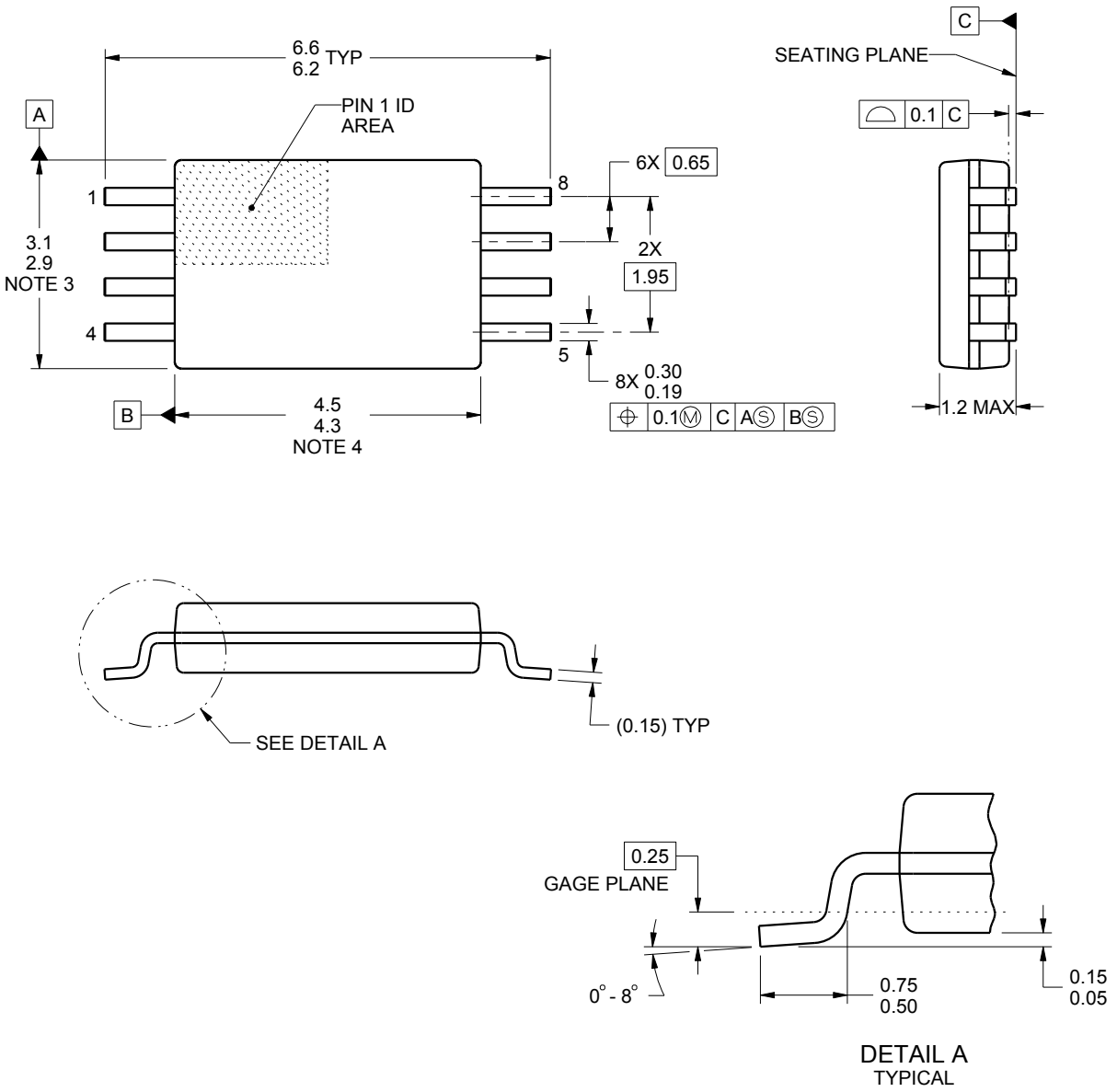

NOTES:

1. All linear dimensions are in millimeters. Any dimensions in parenthesis are for reference only. Dimensioning and tolerancing per ASME Y14.5M.
2. This drawing is subject to change without notice.
3. This dimension does not include mold flash, protrusions, or gate burrs. Mold flash, protrusions, or gate burrs shall not exceed 0.15 mm per side.
4. This dimension does not include interlead flash. Interlead flash shall not exceed 0.25 mm per side.
5. Reference JEDEC registration MO-153, variation AA.

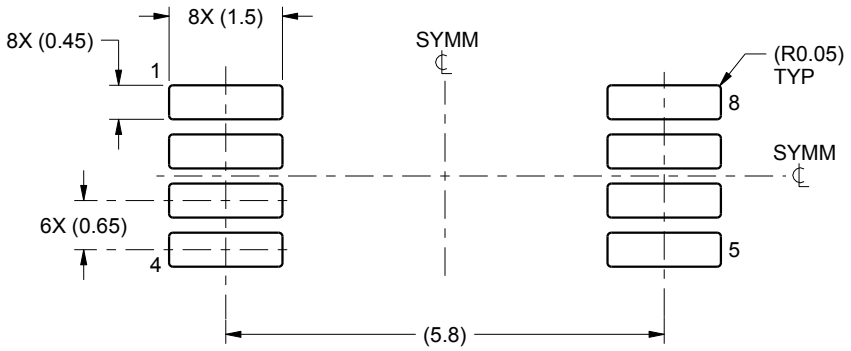

LAND PATTERN EXAMPLE
SCALE:10X

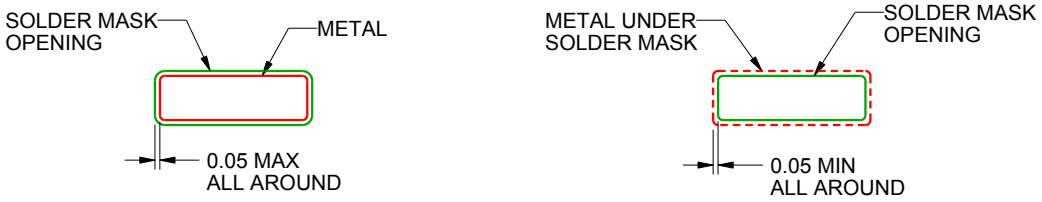

SOLDER MASK DETAILS
NOT TO SCALE

4221848/A 02/2015

NOTES: (continued)

6. Publication IPC-7351 may have alternate designs.
7. Solder mask tolerances between and around signal pads can vary based on board fabrication site.

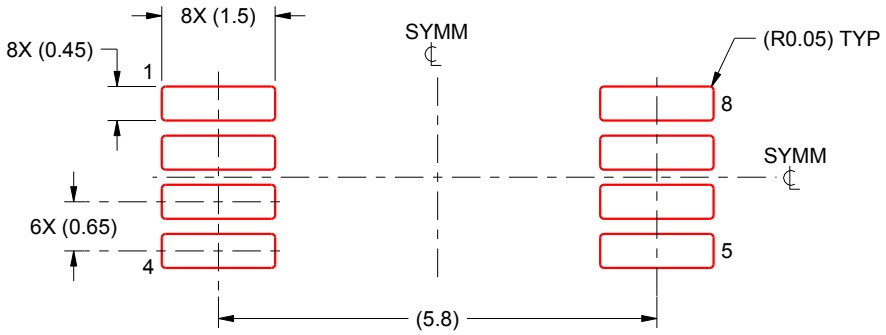

SOLDER PASTE EXAMPLE
BASED ON 0.125 mm THICK STENCIL
SCALE:10X

4221848/A 02/2015

NOTES: (continued)

8. Laser cutting apertures with trapezoidal walls and rounded corners may offer better paste release. IPC-7525 may have alternate design recommendations.
9. Board assembly site may have different recommendations for stencil design.

IMPORTANT NOTICE AND DISCLAIMER

TI PROVIDES TECHNICAL AND RELIABILITY DATA (INCLUDING DATASHEETS), DESIGN RESOURCES (INCLUDING REFERENCE DESIGNS), APPLICATION OR OTHER DESIGN ADVICE, WEB TOOLS, SAFETY INFORMATION, AND OTHER RESOURCES “AS IS” AND WITH ALL FAULTS, AND DISCLAIMS ALL WARRANTIES, EXPRESS AND IMPLIED, INCLUDING WITHOUT LIMITATION ANY IMPLIED WARRANTIES OF MERCHANTABILITY, FITNESS FOR A PARTICULAR PURPOSE OR NON-INFRINGEMENT OF THIRD PARTY INTELLECTUAL PROPERTY RIGHTS.

These resources are intended for skilled developers designing with TI products. You are solely responsible for (1) selecting the appropriate TI products for your application, (2) designing, validating and testing your application, and (3) ensuring your application meets applicable standards, and any other safety, security, regulatory or other requirements.

These resources are subject to change without notice. TI grants you permission to use these resources only for development of an application that uses the TI products described in the resource. Other reproduction and display of these resources is prohibited. No license is granted to any other TI intellectual property right or to any third party intellectual property right. TI disclaims responsibility for, and you fully indemnify TI and its representatives against any claims, damages, costs, losses, and liabilities arising out of your use of these resources.

TI’s products are provided subject to TI’s Terms of Sale, TI’s General Quality Guidelines, or other applicable terms available either on ti.com or provided in conjunction with such TI products. TI’s provision of these resources does not expand or otherwise alter TI’s applicable warranties or warranty disclaimers for TI products. Unless TI explicitly designates a product as custom or customer-specified, TI products are standard, catalog, general purpose devices.

TI objects to and rejects any additional or different terms you may propose.

Copyright © 2026, Texas Instruments Incorporated

Last updated 10/2025