960W AC/DC High-End Ultra Slim Industrial DIN Rail Power XDR-960 series



(XDR-960-xx)

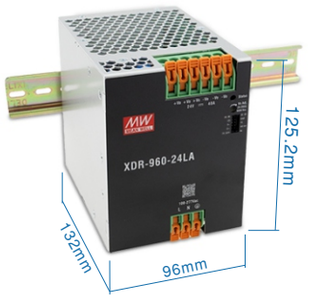

(XDR-960-xxLA)



(XDR-960-xxPI)

(GL type) (Applying) | LISTED Class 1, Div. 2 | LISTED UL61010 | BS EN/EN62368-1 BS EN/EN61558-1 BS EN/EN61010 | IEC62368-1 IEC61558-1 IEC61010 | (Note.5)

IS 13252 (By request Note.6) | KC62368-1 (By request) | CNS15598-1 | GB4943.1 | TPTC004

Automate | Industrial | Security | Network | Telecom

Features

- 85~305Vac input with PFC (277Vac available)
- Global certificates in multi-fields(ITE 62368-1,Industrial 61558-1/-2-16,61010) & Marine DNV,SEMI47,CID2 HazLoc approved
- 96mm ultra slim width
- High efficiency up to 96% and no load power dissipation 1.5W by R.C.
- Built-in MODBus RTU protocol
- 200% peak power capability
- 600% transient peak current capability
- Built-in constant current limiting circuit
- Current sharing up to 3840W (3+1) for parallel use
- Protections: Short circuit / Overload / Over voltage / Over temperature
- Fanless design, cooling by free air convection
- Over voltage category III (OVC III)
- -40~+85°C wide range operation temperature(>+60°C derating)
- Operating altitude up to 5000 meters
- Built-in remote ON/OFF control and DC OK relay contact
- Ultra low inrush current <10~23A
- Built-in ORing FET
- Tool free terminal block (LA Type)
- Conformal coating
- Can be installed on DIN rail TS-35/75 or15
- 5 years warranty

Applications

- Industrial control system
- Semiconductor fabrication equipment
- Factory automation
- Electro-mechanical apparatus

GTIN CODE

MW Search: https://www.meanwell.com/serviceGTIN.aspx

Description

The XDR-960 series is a 960W AC/DC high-end ultra slim industrial DIN rail power. Key features of this series include a narrow 96mm casing, optimizing system installation space, and an ultra-wide input range of 85~305Vac suitable for global use. It boasts a maximum efficiency of 96% and a low standby power consumption 1.5W for energy savings and carbon reduction. It supports MODBus communication interface, provides constant current with up to 200% peak power, and can handle transient peak current of 600%. It has a fanless design, ultra-wide operating temperature range of -40 to +85℃ (up to +60℃ at full load); OVCIII compliance; parallel function capability up to 3840W; ultra-low inrush current of <10~23A, and includes DC OK and remote ON/OFF functions. It also has a built-in ORing FET, the internal PCB has a coating for basic moisture and dust protection, and it has multiple terminal blocks for selection. With comprehensive protection functions, complete safety certifications, and a 5-years warranty, the XDR-960 series is a compact, high-performance, and highly reliable DIN rail power supply.

Model Encoding

XDR - 960 - 24 □ ○

- ○ Mount bracket(Blank/GL)
- □ Terminal type
- 24 Output voltage(24V/36V/48V)
- 960 Output wattage
- XDR Series name

Terminal Type Options		Note
Blank	Screw Terminal	In stock
LA	Lever-Actuated	In stock
PI	Push In	In stock

960W AC/DC High-End Ultra Slim Industrial DIN Rail Power XDR-960 series

SPECIFICATION	XDR-960-24□○	XDR-960-36□○	XDR-960-48□○
	□ =Blank, LA, PI ○ =Blank, GL		
OUTPUT			
DC VOLTAGE	24V	36V	48V
LOAD CURRENT RANGE	0 ~ 40A	0 ~ 26.6A	0 ~ 20A
RATED POWER	960W	957.6W	960W
PEAK CURRENT (5sec.)	80A	53.3A	40A
PEAK POWER (5sec.)	1920W		
RIPPLE & NOISE (max.) Note.2	100mVp-p	120mVp-p	150mVp-p
VOLTAGE ADJ. RANGE	24 ~ 29V	36 ~ 42V	48 ~ 55V
VOLTAGE TOLERANCE Note.3	±1.0%	±1.0%	±1.0%
LINE REGULATION	±0.5%	±0.5%	±0.5%
LOAD REGULATION	±1.0%	±1.0%	±1.0%
SETUP, RISE TIME	1500ms, 100ms/277Vac 1500ms, 100ms/230Vac 1500ms, 100ms/115Vac at full load		
HOLD UP TIME (Typ.)	20ms/277Vac 20ms/230Vac 20ms/115Vac at full load		
INPUT			
AC VOLTAGE RANGE	85 ~ 305Vac		
DC VOLTAGE RANGE	80 ~ 431Vdc (Derating 50% Load @80Vdc)		
NO LOAD CONSUMPTION(Typ.) Remote Power OFF	1.5W@115Vac & 230Vac & 277Vac		
NO LOAD CONSUMPTION(Typ.) Remote Power ON	6.7W@115Vac 4.5W@230Vac & 277Vac		
FREQUENCY RANGE	47 ~ 63Hz		
POWER FACTOR (Typ.)	PF>0.98/115Vac PF>0.95/230Vac PF>0.9/277Vac at full load		
EFFICIENCY (Typ.)	95%	95.5%	96%
AC CURRENT (Typ.)	10A/115Vac 5A/230Vac 4.2A/277Vac		
INRUSH CURRENT (Typ.)	COLD START 23A/115Vac 10A/230Vac 15A/277Vac		
LEAKAGE CURRENT	<3.5mA / 240Vac <4.5mA / 277Vac		
PROTECTION			
OVERLOAD	105%~200% rated output power for more than 5 sec then constant current limiting at rate current without shutdown when Vo=30%~100%		
	Hiccup mode when Vo<30% rated voltage		
OVER VOLTAGE	30 ~ 34V	43 ~ 50V	57 ~ 66V
	Protection type : Shut down o/p voltage, re-power on to recover		
OVER TEMPERATURE	Protection type : Shut down o/p voltage, recovers automatically after temperature goes down		
FUNCTION			
PARALLEL	Up to 3840W (3+1) units; Please refer to Function Manual for more details.		
DC OK RELAY CONTACT	Relay Contact Ratings (max.):30Vdc/1A, 30Vac/0.5A resistive load		
REMOTE CONTROL	Power ON :RC(Pin9) and 5V_AUX(Pin10) short .	Please refer to Function Manual for more details.	
	Power OFF:RC(Pin9) and 5V_AUX(Pin10) open.		
MODBus INTERFACE	Communication provides functions such as control, setting, and monitoring.		
TRANSIENT PEAK CURRENT CAPABLILTY	600% rated current for 15ms		
ENVIRONMENT			
WORKING TEMP.	-40 ~ +85℃ (Refer to "Derating Curve")		
WORKING HUMIDITY	20 ~ 95% RH non-condensing		
STORAGE TEMP., HUMIDITY	-40 ~ +85℃, 10 ~ 95% RH non-condensing		
TEMP. COEFFICIENT	±0.03%/℃ (0 ~ 60℃)		
VIBRATION	Component:10 ~ 500Hz, 2G 10min./1cycle, 60min. each along X, Y, Z axes; Mounting: Compliance to IEC60068-2-6		

960W AC/DC High-End Ultra Slim Industrial DIN Rail Power XDR-960 series

SPECIFICATION	XDR-960-24□○	XDR-960-36□○	XDR-960-48□○
	□ =Blank, LA, PI ○ =Blank, GL		
SAFETY & EMC Note.4&5&6			
SAFETY STANDARDS	CB IEC62368-1, IEC61558-1/-2-16, IEC61010-1/-2-201 TUV BS EN/EN62368-1,BS EN/EN61558-1/-2-16,BS EN/EN61010-1/-2-201 UL UL121201/CSA C22.2 NO.213.17 Class I,DIV2 Group A,B,C,D Hazardous Locations T4;UL61010-1/-2-201 CCC GB4943.1 BSMI CNS15598-1 EAC TPTC004 Marine DNV (for GL type only) SEMI F47 approved KC/BIS KC62368-1 and BIS IS 13252 (Part 1) certified, No stock ,contact sales by request		
OVER VOLTAGE CATEGORY Note.7	IEC/EN 61558-1/-2-16 (OVC Ⅲ, altitude up to 2000m) IEC/EN/UL 61010-1/-2-201 (OVC Ⅱ, altitude up to 5000m) IEC/EN 62368-1 (OVC Ⅱ, altitude up to 5000m)		
SAFETY EXTRA-LOW VOLTAGE(SELV)	IEC/EN 61558-2-16 (SELV) IEC/EN 62368-1 (SELV / ES1)		
WITHSTAND VOLTAGE	I/P-O/P: 4KVac I/P-FG: 2KVac O/P-FG: 1.5KVac O/P-DC OK: 0.5KVac		
ISOLATION RESISTANCE	I/P-O/P, I/P-FG, O/P-FG: 100M Ohms/500VDC/25℃/ 70%RH		
EMC EMISSION	**Parameter**	**Standard**	**Test Level / Note**
	Conducted	BS EN/EN55032 (CISPR32) / BS EN/EN61204-3 / CNS15936 / KS C 9832	Class B
	Radiated	BS EN/EN55032 (CISPR32) / BS EN/EN61204-3 / CNS15936 / KS C 9832	Class B
	Harmonic Current	BS EN/EN61000-3-2	Class A
	Voltage Flicker	BS EN/EN61000-3-3	-----
EMC IMMUNITY	BS EN/EN55035 , BS EN/EN61204-3, BS EN/EN61000-6-2(BS EN/EN50082-2) ,KS C 9835,SEMI F47 tested at 200Vac		
	Parameter	**Standard**	**Test Level / Note**
	ESD	BS EN/EN61000-4-2	Level 4, 15KV air ; Level 4, 8KV contact; criteria A
	Radiated	BS EN/EN61000-4-3	Level 3, 10V/m ; criteria A
	EFT / Burst	BS EN/EN61000-4-4	Level 4, 4KV ; criteria A
	Surge	BS EN/EN61000-4-5	Level 4, 2KV/Line-Line ;Level 4, 4KV/Line-Line-Chassis ;criteria A
	Conducted	BS EN/EN61000-4-6	Level 3, 10V ; criteria A
	Magnetic Field	BS EN/EN61000-4-8	Level 4, 30A/m ; criteria A
OTHERS			
MTBF	819.6K hrs min. Telcordia SR-332 (Bellcore); 113.3K hrs min. MIL-HDBK-217F (25℃)		
DIMENSION	**96*125.2*132mm (W*H*D)**		
PACKING	2.06Kg; 6pcs/ 13.4Kg / 1.49CUFT		

NOTE

1. All parameters NOT specially mentioned are measured at 230Vac input, rated load and 25℃ of ambient temperature.
2. Ripple & noise are measured at 20MHz of bandwidth by using a 12" twisted pair-wire terminated with a 0.1 μF & 47 μF parallel capacitor.
3. Tolerance : includes set up tolerance, line regulation and load regulation.
4. The power supply is considered a component which will be installed into a final equipment. The final equipment must be re-confirmed that it still meets EMC directives. (as available on https://www.meanwell.com//Upload/PDF/EMI_statement_en.pdf)
5. The Regulatory Compliance Mark (RCM) is applied on a voluntary basis. The equipment meets the relevant IEC or AS/NZS standards, or AS/NZS 3820 where applicable. The use of the RCM mark complies with AS/NZS 4417.1.
6. Some factory or model may not have the BIS logo, please contact your MEAN WELL sales for more information.
7. The ambient temperature derating of 3.5℃/1000m with fanless models and of 5℃/1000m with fan models for operating altitude higher than 2000m(6500ft).
8. Installation clearances : 40mm on top, 20mm on the bottom, 5mm on the left and right side are recommended when loaded permanently with full power. In case the adjacent device is a heat source, 15mm clearance is recommended.

※ Product Liability Disclaimer : For detailed information, please refer to https://www.meanwell.com/serviceDisclaimer.aspx

■ Block Diagram

PFC fosc : 70KHz
PWM fosc : 65KHz

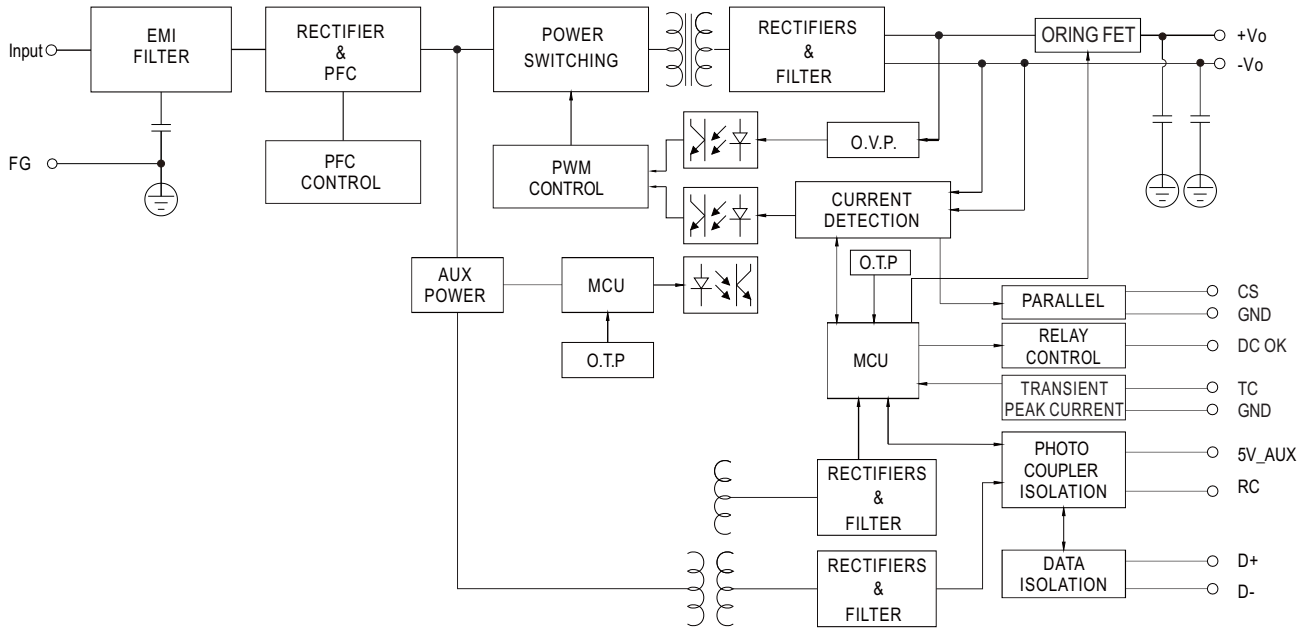

■ Derating Curve

Suitable for 100/110/115/120Vac System
(85~132Vac)

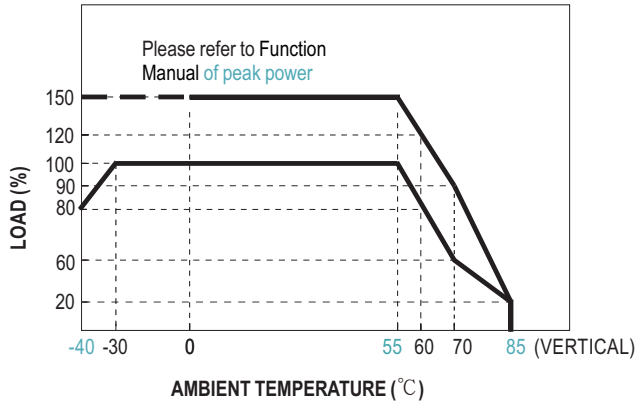

Suitable for 220/230/240/277Vac System
(180~305Vac)

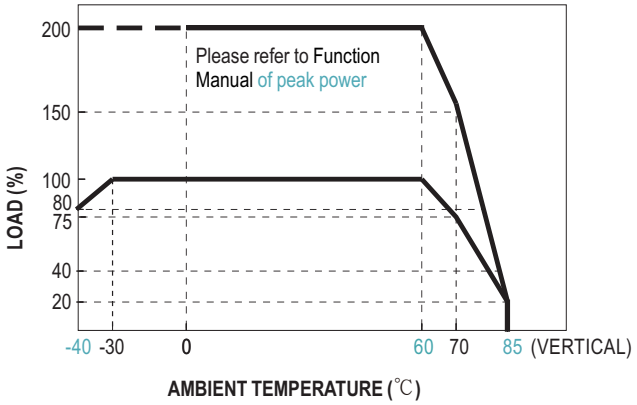

■ Output derating VS input voltage

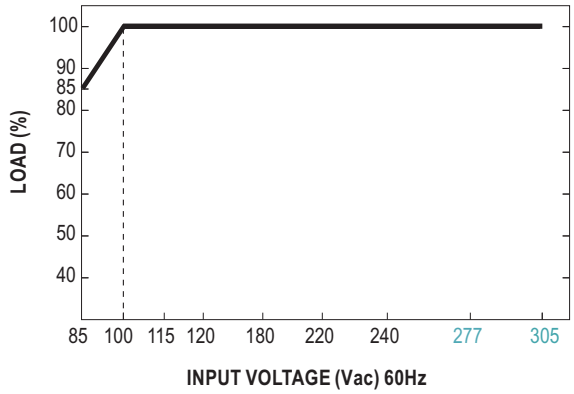

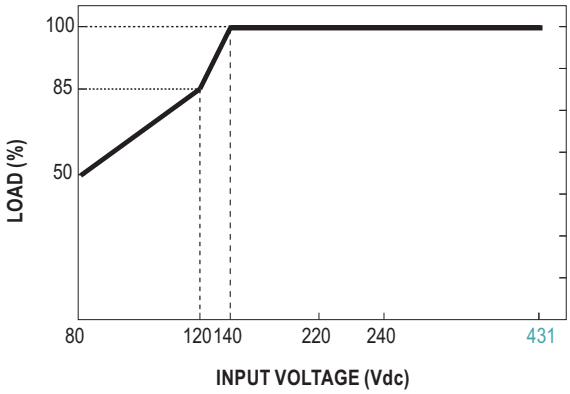

■ Peak Power

$$P_{av} = \frac{P_{pk} \times t + P_{npk} \times (T-t)}{T} \leqslant P_{rated}$$

$$Duty = \frac{t}{T} \times 100\% \leqslant 35\%$$

$t \leqslant 5$ sec

P_{av} : Average output power (W)

P_{pk} : Peak output power (W)

P_{npk} : Non-peak output power(W)

P_{rated} : Rated output power(W)

t : Peak power width(sec)

T : Period(sec)

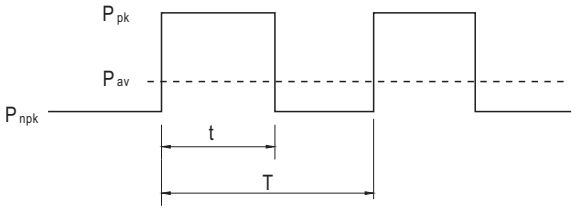

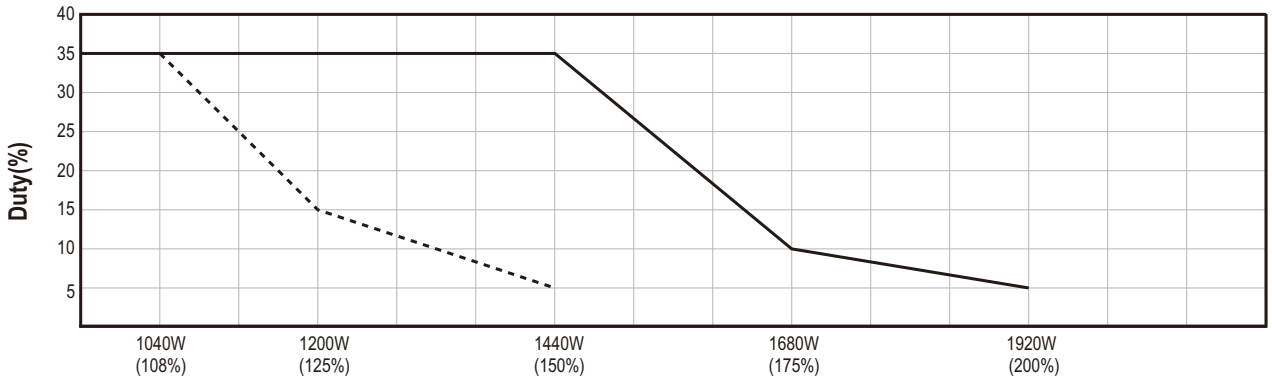

For example (24V model) :

Vin = 200Vac Duty_max = 5%

$P_{av} = P_{rated} = 960W$

$P_{pk} = 1920W$

$t \leqslant 5$ sec

$$T \geqslant \frac{5\ sec}{5\%} \geqslant 100sec$$

$$P_{npk} \leqslant \frac{T P_{av} - t P_{pk}}{T-t}$$

$P_{npk} \leqslant 909.5W$

■ Transient peak current Capability

※ The power supply can provide transient peak current to support the start-up of inductive or capacitive loads.
The maximum duration and voltage dips are explained below.

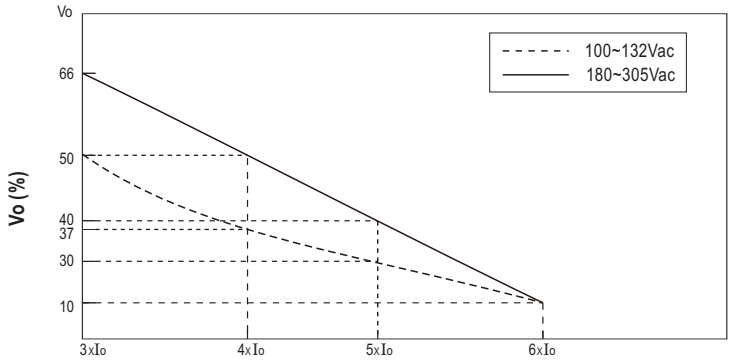

Transient peak current voltage dip

Load	100~132Vac Vo(%)	180~305Vac Vo(%)	Time (Max.)
3xIo	50	66	100ms
4xIo	37	50	70ms
5xIo	30	40	40ms
6xIo	10	10	15ms

※ After a transient peak current event occurs, the rated load must be maintained for at least 15 seconds before the next event.

For example : (600% transient peak current)

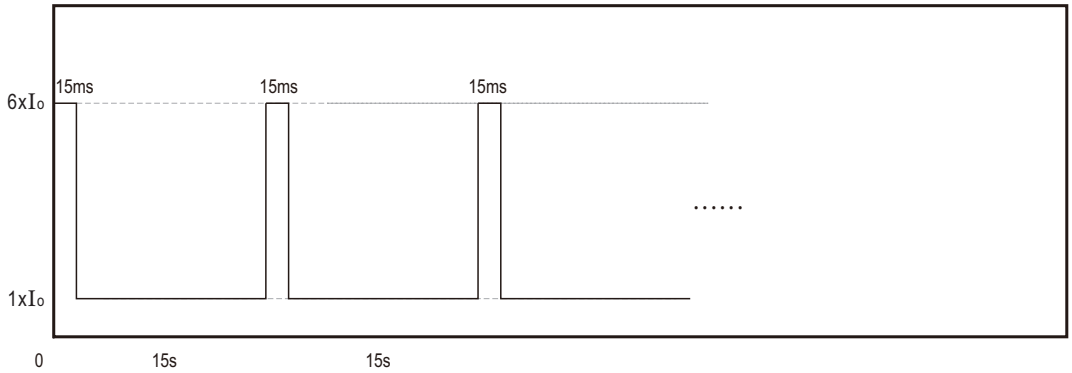

■ Function Manual

Pin No.	Function	Description
1,2	DC OK Relay Contact	Contact close : PSU turns ON/DC_OK ; Contact open : PSU turns OFF/DC_fail; Contact ratings (max.): 30Vdc/1A ,30Vac/0.5A resistive load.
3	GND	When units are connected in parallel, the GND pins of the units should be connected mutually to allow current balance between units.
4	CS	Current sharing signal. When units are connected in parallel, the CS pins of the units should be connected mutually to allow current balance between units.
5	TC (Note.1)	The unit can enable the transient peak current by dry contact between TC(Pin5) and GND(Pin3). Power ON: Short; Power OFF: Open.
6	D- (Note.2)	Data line used in MODBUS interface
8	D+ (Note.2)	
7	GND_AUX	The signal return is isolated from the output terminal. (+Vo & -Vo)
9	RC (Note.2)	The unit can turn the output ON/OFF by electrical signal or dry contact between RC ON/OFF(Pin9) and 5V_AUX(Pin10). Power ON: Short(4~5Vdc);Power OFF: Open(<0.5Vdc);The Maximum input voltage is 5Vdc.
10	5V_AUX	For remote control signal only. Isolated from the output terminals.

Note1: Non-isolated signal, referenced to GND.
Note2: Isolated signal, referenced to GND-AUX.

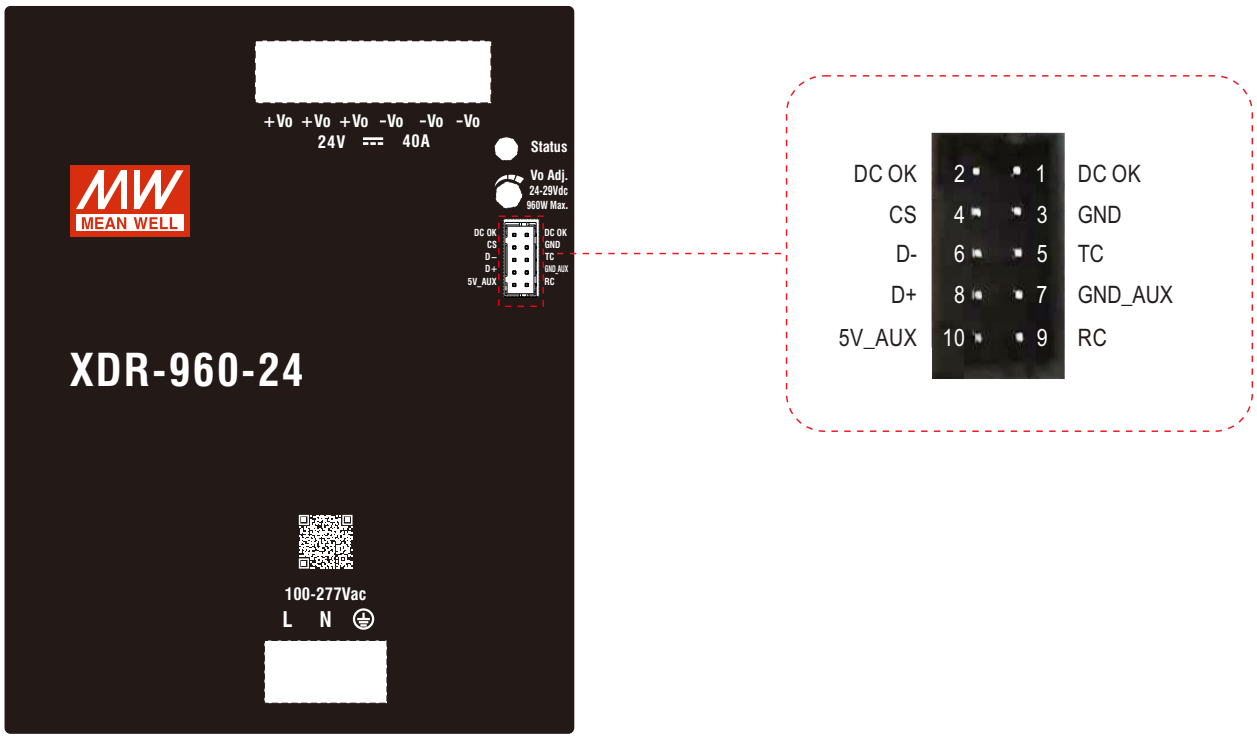

1.Parallel Use

XDR-960 has the built-in active current sharing function and can be connected in parallel, up to 4 units, to provide higher output power as exhibited below :

(1) The transient peak current capability needs to be disabled,The TC pin of the units cannot be connected to GND .

(2) Parallel operation is available by connecting the units shown as below (CS,GND are connected mutually in parallel).

(3) Difference of output voltages among parallel units should be less than 0.2V.

(4) The total output current must not exceed the value determined by the following equation (Output current at parallel operation) =(The rated current per unit) x (Number of unit) x 0.9.

(5) In parallel operation 4 units is the maximum, please consult the manufacture for other applications.

(6) The power supplies should be paralleled using short and large diameter wiring and then connected to the load.

(7) When in parallel operation, the minimum output load should be greater than 5% of total output load. (Min. load >5% rated current per unit x number of unit)

(8) In parallel connection, maybe only one unit (master) operate if the total output load is less than 5% of rated load condition. The other PSUs (slaves) may go into standby mode and their output Green LEDs & relays will not turn on.

(9) CS and GND lines should be twisted in pairs.

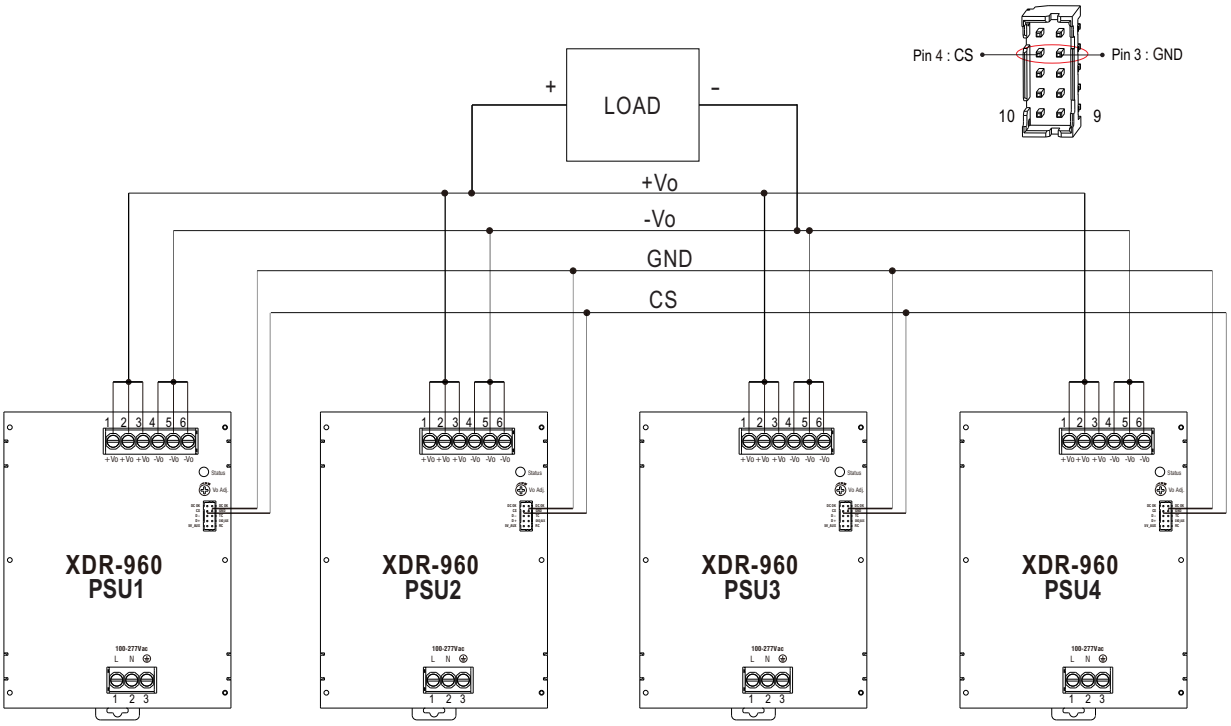

2. Support MODBus Communication

Communication provides functions such as control, setting, and monitoring.
Parameters include output voltage, output power, input voltage, etc
For details, Please refer to: http://www.meanwell.com/manual.html

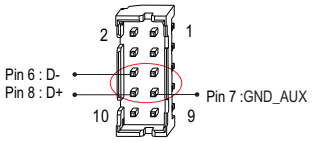

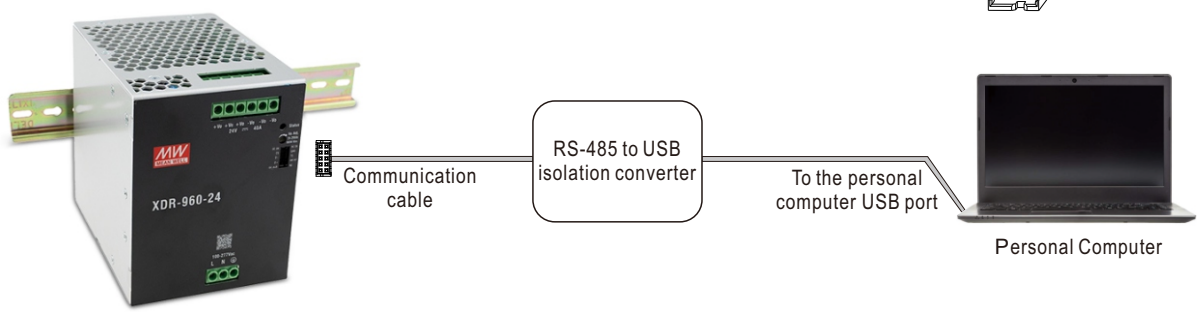

3.DC OK Relay Contact

Contact Close	PSU turns ON / DC OK.
Contact Open	PSU turns OFF / DC Fail.
Contact Ratings (max.)	30Vdc/1A ,30Vac/0.5A resistive load.

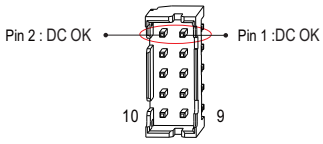

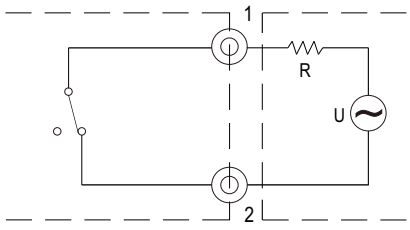

External voltage source (U) and resistor (R)
(The max. Sink is 30Vdc/1A ,30Vac/0.5A)

Internal circuit of DC_OK, via relay contact

4.Remote ON/OFF Control

The PSU can be turned ON/OFF by using the "Remote Control" function.

PSU Vo Status	Between RC(Pin9) and 5V_AUX(Pin10)
Remote power ON	Short (Pin9=4~5V)
Remote power OFF	Open (Pin9=0~0.5V)

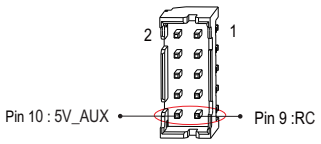

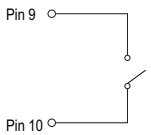	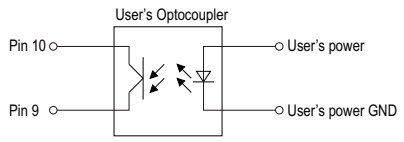	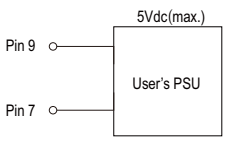	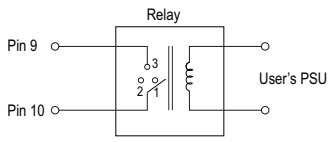
R.C. by external switch.	R.C. by user's optocoupler control module.	R.C. by user's external auxiliary power.	R.C. by user's Relay control module.

5.Protection Against Inverse Voltages From The Load

Prevent PSU damage from Back Electro magnetic Force during deceleration of motor or inductive load.

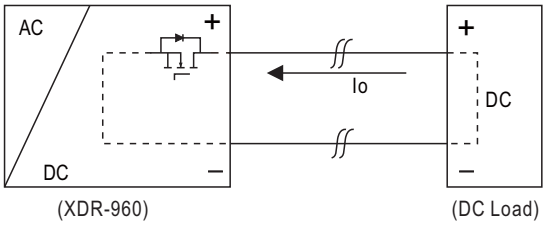

PSU'S ORing FET turn OFF voltage	
MODEL	Max. allowable reverse voltage
XDR-960-24	<35V
XDR-960-36	<50V
XDR-960-48	<63V

6.LED Status Indictors

Description	Output of alarm
Restore Factory Settings	Green : 3 Blink 
DC OK	Green 
DC Fail	Red 
Overload (115Vac: >150% rated current) (230Vac: >200% rated current)	Red : 1 Blink/Pause 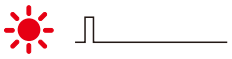
Over voltage	Red : 2 Blink/Pause 
Over temperature	Red : 3 Blink/Pause 
Against Inverse Voltages From The Load	Red : 4 Blink/Pause 
High Ambient Temperature Warning	Red : Blink 
Others (Note)	Red : 5 Blink/Pause 

Note: Others include protection status AC UVP、Internal Communication error and EEPROM error.

■ Mechanical Specification

(Unit:mm , Tolerance ±1mm)

Case No. 304

Ⓑ: Control Pin No. Assignment:JS-2008R-2x05 or equivalent

Mating Housing	Terminal
JS-2007-2x05-BK or equivalent	JS-2007-T or equivalent

Pin No.	Assignment
1,2	DC OK
3	GND(Current sharing)
4	CS(Current sharing)
5	TC
6	D-
7	GND_AUX
8	D+
9	RC
10	5V_AUX

Ⓐ: Terminal Pin No.Assignment

Pin No.	Assignment
1,2,3	DC Output +Vo
4,5,6	DC Output -Vo

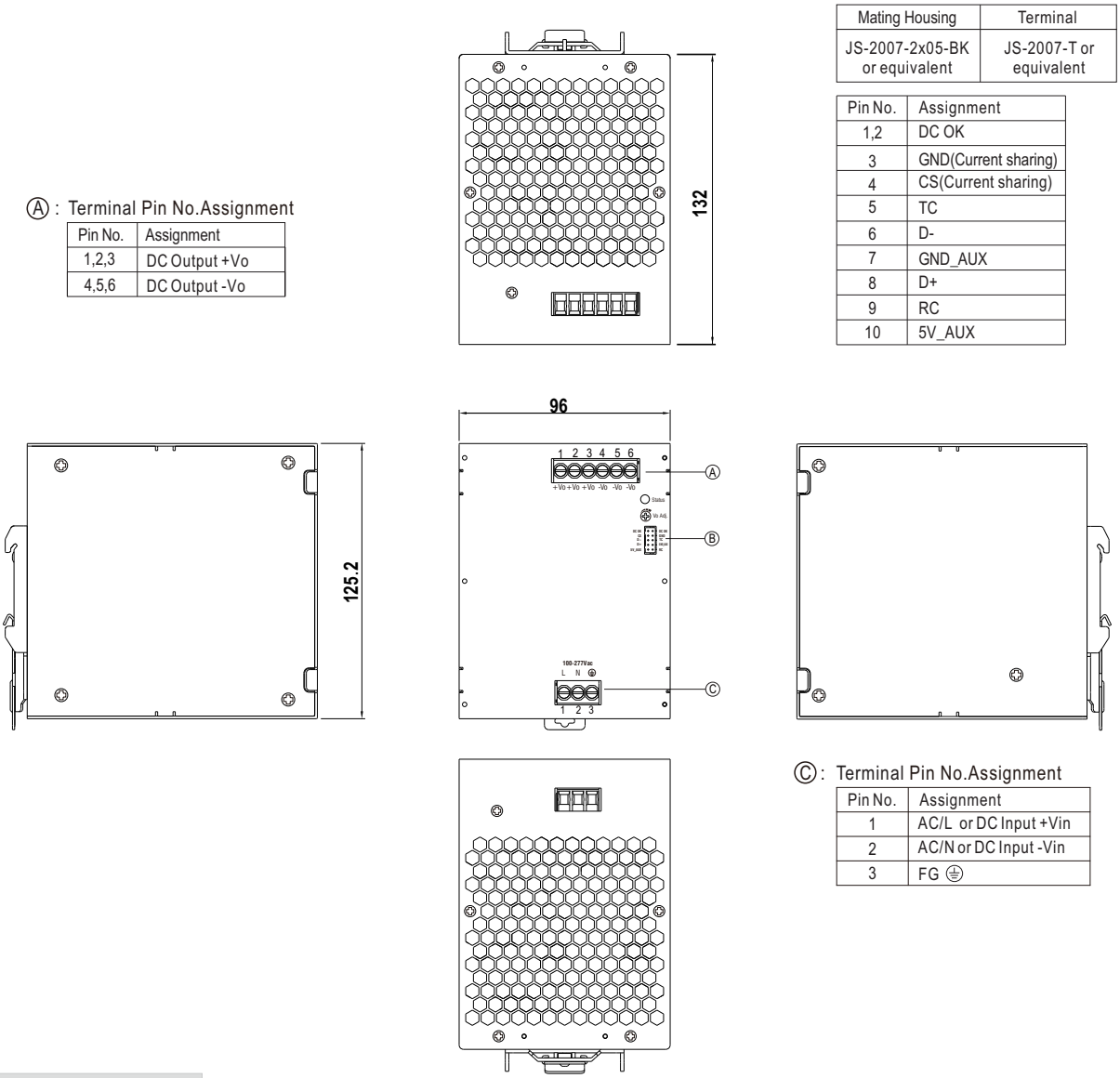

Ⓒ: Terminal Pin No.Assignment

Pin No.	Assignment
1	AC/L or DC Input +Vin
2	AC/N or DC Input -Vin
3	FG ⏚

■ Recommend Wiring

		AC Input T.B	DC Output T.B
Solid Wire		6mm² max.	6mm² max.
A.W.G		18~10 AWG	16~10 AWG
Wire Stripping Length	Blank	10~11mm	10~11mm
	LA	11~12mm	11~12mm
	PI	14~15mm	14~15mm
Screw Terminal Torque	Blank	5 Lb-In	5 Lb-In
	LA/PI	Not applicable	

■ Accessory List

Communication interface mating wire (standard accessory)

No.	Item		Quantity
1	Mating wire	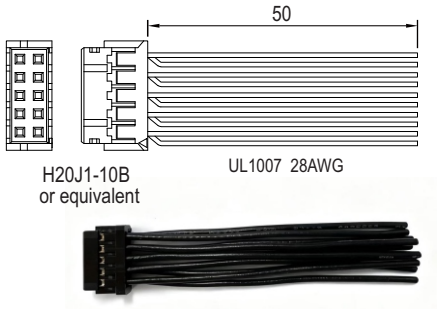	1pcs/per model

■ Accessory List and Installation Diagram for GL Type

- The GL Type model is recommended for DNV certification or high vibration application.
- The GL Type model include the following accessories.

NO.	Item		Quantity
1	GL installation bracket	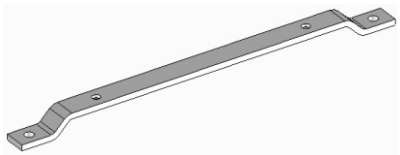	2
2	Screw(M3*8)		4
3	Screw(M4*8)		4

※ GL Type mechanical specification

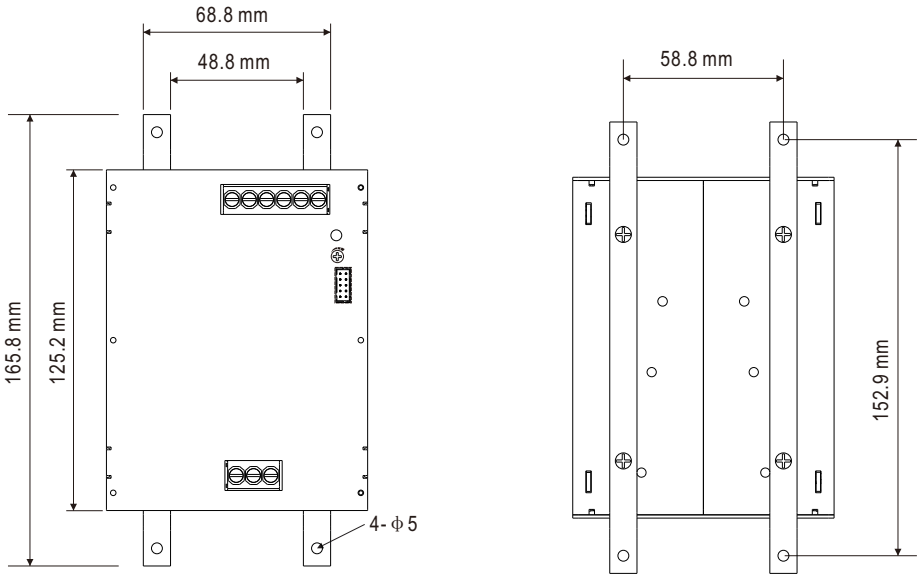

※ GL Type installation steps

Step1	Step2	Step3
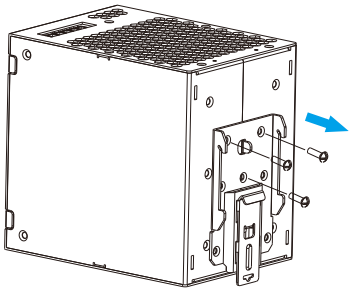	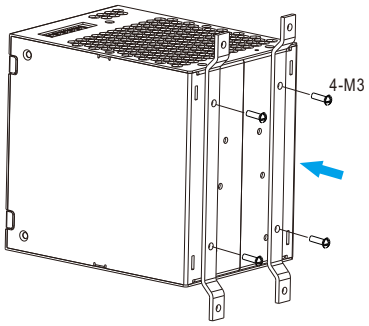	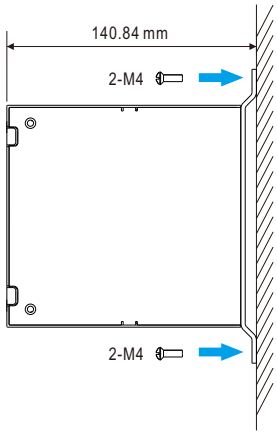
Detach the DIN Rail clip by removing screws.	Mount the steel brackets to the back of the case with M3*8 (L=8mm) screws. Recommended screw torque setting is 5 Lb-In.	Mount the XDR-960 power supply directly to the wall/panel through the mounting holes on the brackets.

■ Installation Instruction

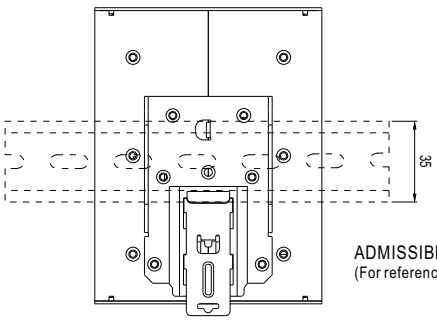

ADMISSIBLE DIN-RAIL:TS35/7.5 OR TS35/15
(For reference only. Not included with unit.)

This series fits DIN rail TS35/7.5 or TS35/15.
For installation details, please refer to the Instruction manual.

■ Installation Manual

Please refer to : http://www.meanwell.com/manual.html