Typical Features

- ◆ Wide input voltage range 85-305VAC/100-430VDC
- ◆ No-load power consumption ≤0.3W@220VAC
- ◆ Efficiency up to 86% (Typ.)
- ◆ Operating temperature from -40℃ to +75℃
- ◆ Switching frequency 65KHz
- ◆ Short circuit, over current & over voltage protections
- ◆ Isolation voltage 4000VAC
- ◆ Altitude during operation 5000m Max
- ◆ With UL/CB/CE certificates
- ◆ Safety Class II



EN62368-1 IEC62368-1 UL62368-1

Application Field

FA15-220SXXG2N4 Series --- Compact size & high efficiency modular power supplies with global adapted input voltage range (both AC & DC available), low ripple, low temperature rise, low standby power consumption, high efficiency, high reliability and safety isolated. This series of products can be widely used in the fields of Industry, Office devices, Electric power and Household appliances, etc. The additional circuit diagram for EMC is recommended for the application with high EMC requirement.

Typical Product List

Certificate	Part No.	Input Voltage		Output Specification			Max Capacitive Load @220VAC	Ripple & Noise 20MHz (Max)	Efficiency @Full load 220VAC (Typ.)
		Nominal	Range	Power	Voltage	Current			
		(VAC)	(VAC)	P(W)	Vo (V)	Io (mA)	uF	mVp-p	%
CE/CB/UL	FA15-220S05G2N4	220	85-305	15	5	3000	5000	70	85
CE/CB/UL	FA15-220S12G2N4				12	1250	2000	120	85
-	FA15-220S12V3G2N4				12.3	1220	2000	120	85
CE/CB/UL	FA15-220S12V5G2N4				12.5	1200	2000	120	85
CE/CB/UL	FA15-220S15G2N4				15	1000	2000	120	85
CE/CB/UL	FA15-220S24G2N4				24	625	1000	120	86

Note 1: The typical value of efficiency is based on the product tested after half an hour burn-in at full load.

Note 2: The minimum efficiency is defined as -2% of the typical value.

Note 3: Please contact Aipu sales for other output voltages requirement of this series but not listed in this table.

Note 4: The suffix -T indicates the chassis package, -TS indicates the package of DIN Rail.

Input Specifications

Item	Test Conditions	Min.	Typ.	Max.	Unit
Input voltage range	AC Input	85	220	305	VAC
	DC Input	100	310	430	VDC

Guangzhou Aipu Electron Technology Co., Ltd reserves the copyright and right of final interpretation.

Input frequency range	-	47	50	63	Hz
Input current	Input 115VAC	-	-	0.45	A
	Input 220VAC	-	-	0.3	
Surge current	Input 115VAC	-	-	30	A
	Input 220VAC	-	-	60	
No-load power consumption	Input 115VAC	-	-	0.3	W
	Input 220VAC	-	-		
Leakage current	-	0.5mA TYP/230VAC/50Hz			
External fuse recommended		2A/300VAC Time-delay fuse			
Hot plug	-	Unavailable			
ON/OFF control	-	Unavailable			

Output Specifications

Item		Test Conditions	Min.	Typ.	Max.	Unit
Voltage accuracy		Full input voltage range, any load	-	-	±3.0	%
Line regulation		Rated Load	-	-	±0.5	%
Load regulation		Nominal input voltage, 20%~100% load	-	-	±3.0	%
Minimum load		Single Output	0	-	-	%
Dynamic response	Overshoot range	25%~50%~25% 50%~75%~50%	-5.0	-	+5.0	%
	Recovery time		-	-	+5.0	mS
Temperature drift coefficient		-	-	±0.03%	-	%/℃
Turn-on delay time		Input 115VAC (full load)	-	-	6000	mS
		Input 220VAC (full load)	-	-	3000	
Power-off hold up time		Input 115VAC (full load)	-	20	-	mS
		Input 220VAC (full load)	-	80	-	
Output overshooting		Full input voltage range	≤10%Vo			%Vo
Short circuit protection			Continuous, Self-recovery			Hiccup
Over current protection		Input 220VAC	120%Io	-	170%Io	Hiccup
Over voltage protection		Output 5VDC	≤7.5			VDC
		Output 12V/12.3V/12.5VDC	≤18			
		Output 15VDC	≤20			
		Output 24VDC	≤30			
Noise & Ripple		5%-100% load, 20MHz bandwidth	-	-	120	mV
Note: The Ripple & Noise is tested by the Parallel-line Method, please refer to the following test instruction.						

General Specifications

Item	Test Conditions	Min.	Typ.	Max.	Unit
Switching frequency	-	61	65	73	KHz
Operating temperature	Refer to the Temperature Derating Graph	-40	-	+75	℃
Storage temperature	-	-40	-	+90	

Guangzhou Aipu Electron Technology Co., Ltd reserves the copyright and right of final interpretation.

Soldering temperature	Wave-soldering		260±4℃, timing 5-10S			
	Manual-soldering		360±8℃, timing 4-7S			
Relative humidity	-		10	-	90	%RH
Isolation voltage	I/P-O/P	Test 1min, leakage current ≤5mA	4000	-	-	VAC
Insulation resistance	I/P-O/P	@DC500V	100	-	-	MΩ
MTBF	MIL-HDBK-217F@25℃		300	-	-	K Hours
Vibration	-		10-55Hz,10G, 30Min, along X, Y, Z			
Safety class	-		CLASS Ⅱ			
Case flame class	-		UL 94-V0			

Weight & Dimensions	Part No.	Weight (Typ.)	Dimensions L x W x H	
	FA15-220SXXG2N4	50g	47.60 x 26.80 x 23.50 mm	1.874 x 1.055 x 0.925 inch
	FA15-220SXXG2N4-T	65g	76.00 x 31.50 x 32.50 mm	2.992 x 1.240 x 1.279 inch
	FA15-220SXXG2N4-TS	85g	76.00 x 31.50 x 37.50 mm	2.992 x 1.240 x 1.476 inch

EMC Performance

Total item		Sub item	Test Standard	Performance/Class
EMC	EMI	CE	CISPR32/EN55032	CLASS B (with the Recommended Circuit 1)
		RE	CISPR32/EN55032	CLASS B (with the Recommended Circuit 1)
	EMS	ESD	IEC/EN61000-4-2	Contact ±6KV / Air ±8KV Perf. Criteria B
		RS	IEC/EN61000-4-3	10V/m Perf. Criteria A
		EFT	IEC/EN61000-4-4	±2KV Perf. Criteria B
				±4KV Perf. Criteria A (with the Recommended Circuit 1)
		Surge	IEC/EN61000-4-5	Line to line ±1KV Perf. Criteria B
				Line to line ±2KV / line to ground ±4KV Perf. Criteria A (with the Recommended Circuit 1)
		CS	IEC/EN61000-4-6	10Vr.m.s Perf. Criteria A
		PFMF	IEC/EN61000-4-8	10A/m Perf. Criteria A
		Voltage dips and interruptions	IEC/EN61000-4-11	0%-70% Perf. Criteria B

Product Characteristics Graphs

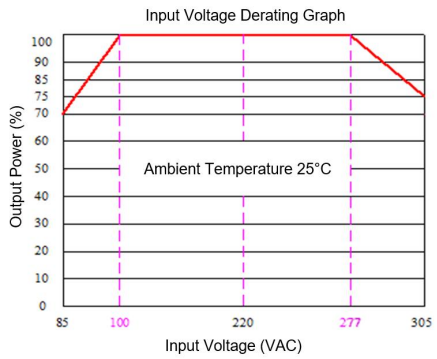

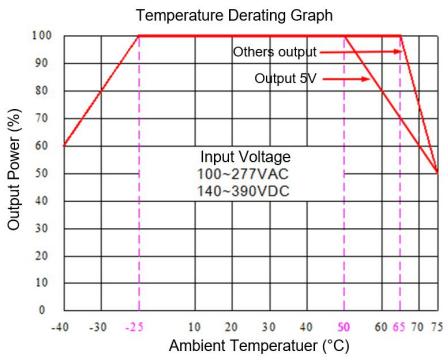

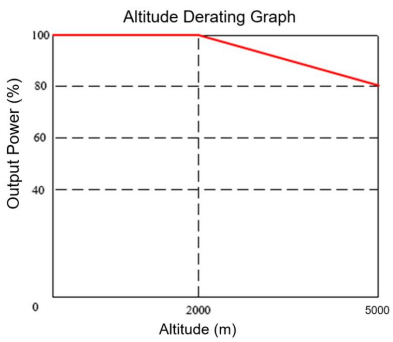

Note 1: The output power should be derated based on the input voltage derating graph at 85~100VAC/100~140VDC & 277~305VAC/390~430VDC.

Note 2: This product should operate under the condition of natural air, please contact us if it could be used at a closed space.

Guangzhou Aipu Electron Technology Co., Ltd reserves the copyright and right of final interpretation.

Recommended Circuits for Application

1, EMC solution and recommended circuit diagram

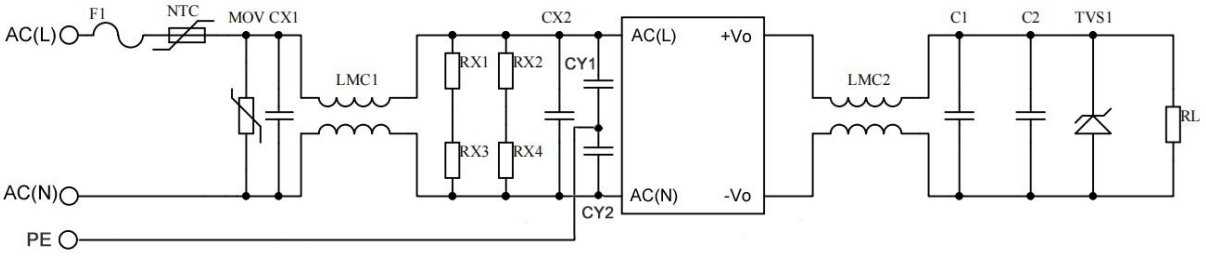

Figure – Circuit 1

FUSE	2.0A/300VAC, Time-delay fuse (Necessary)	CX1	X2/224K/310VAC
MOV	14D561K/4500A	CX2	X2/104K/310VAC
NTC	10D-11	CY1, CY2	Y1/102M/400VAC
LMC1	30mH/0.6A	RX1, RX2, RX3, RX4	1206/1MΩ/0.25W
LMC2	40uH/4A	TVS1	See note below

Note:

1) C1 capacitance value should be less than the Max capacitive load, a high frequency low impedance electrolytic capacitor is recommended, the withstand voltage should be more than 1.5X of output voltage.

2) 0.1uF ceramic SMD capacitor is recommended for C2 which withstand voltage should be more than 1.5X of output voltage.

3) TVS1: SMBJ7.0A is recommended for 5V output, SMBJ20A for 12V/12.3V/12.5V/15V outputs, SMBJ30.0A for 24V output.

2, External circuit diagram for FA15-220S05G2N4 to achieve low Ripple & Noise

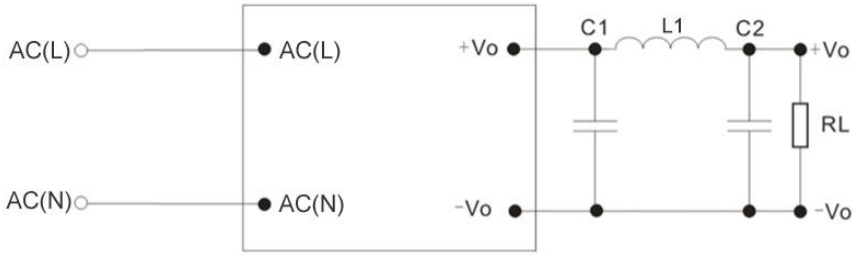

Figure - Circuit 2

Note:

1) Electrolytic capacitors 330uF/10V is recommended for C1 and 220uF/10V for C2

2) 2.2uH/4A Drum choke is recommended for L1.

Ripple & Noise Test Instruction (Parallel-line Method, 20MHz Bandwidth)

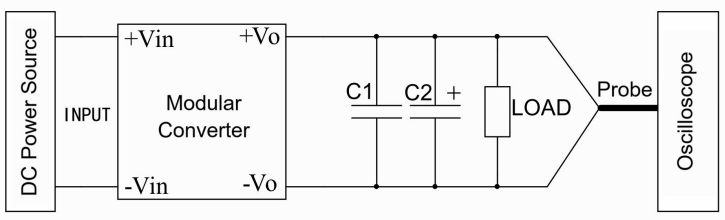

1. The Ripple & Noise test needs the cables in parallel, an oscilloscope that should be set at the Sample Mode, bandwidth 20MHz. 100M bandwidth probe with cap and ground removed. One polypropylene capacitor C1(0.1uF) and one high-frequency low-resistance electrolytic capacitor C2(10uF) are connected in parallel with the probe.

2. Refer to the test diagram, the converter output connects to the electronic load by the jig with cables which size should be defined according to the output current value. The test can start at the converter output terminals after the input power on.

Guangzhou Aipu Electron Technology Co., Ltd reserves the copyright and right of final interpretation.

Mechanical Dimensions

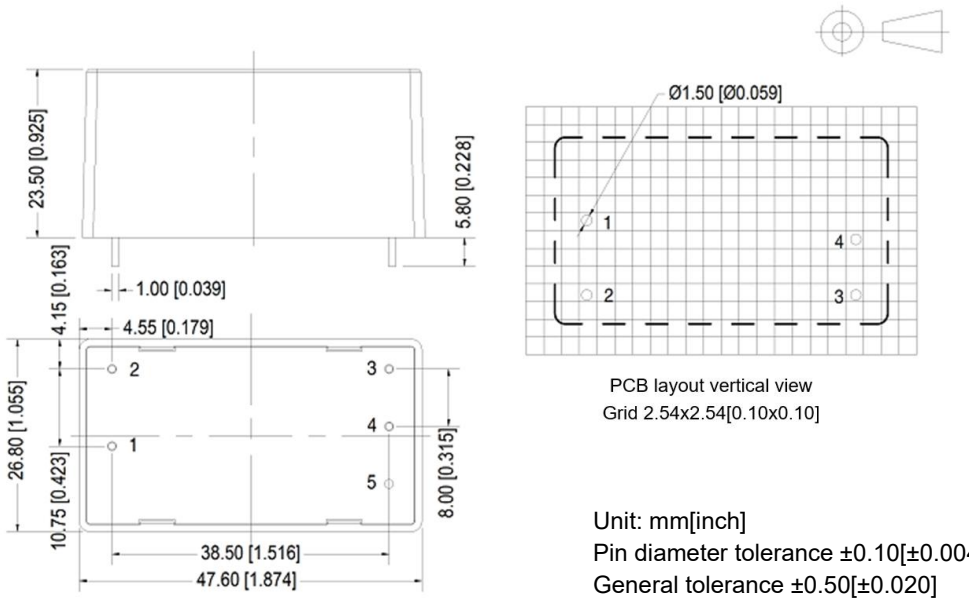

Unit: mm[inch]
Pin diameter tolerance ±0.10[±0.004]
General tolerance ±0.50[±0.020]

Pin-out Function Description

Pin No.	1	2	3	4	5
Function	AC(L)	AC(N)	-Vo	+Vo	No Pin

(-T) Mechanical Dimensions

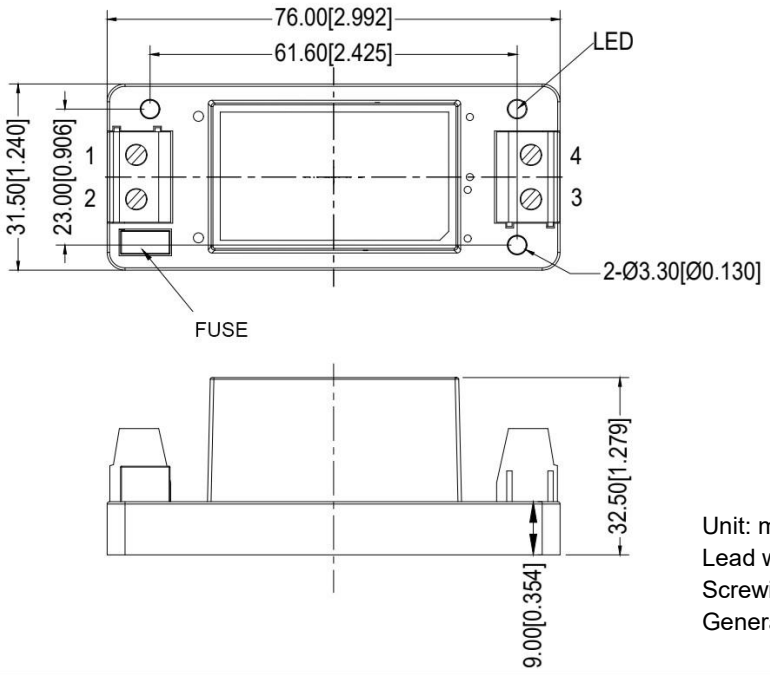

Unit: mm[inch]
Lead wires gauge: 24-12AWG
Screwing torque: 0.4 N.m Max
General tolerance: ±1.00[±0.039]

Terminal Function Description

Terminal No.	1	2	3	4
Function	AC(L)	AC(N)	-Vo	+Vo

Guangzhou Aipu Electron Technology Co., Ltd reserves the copyright and right of final interpretation.

(-TS) Mechanical Dimensions

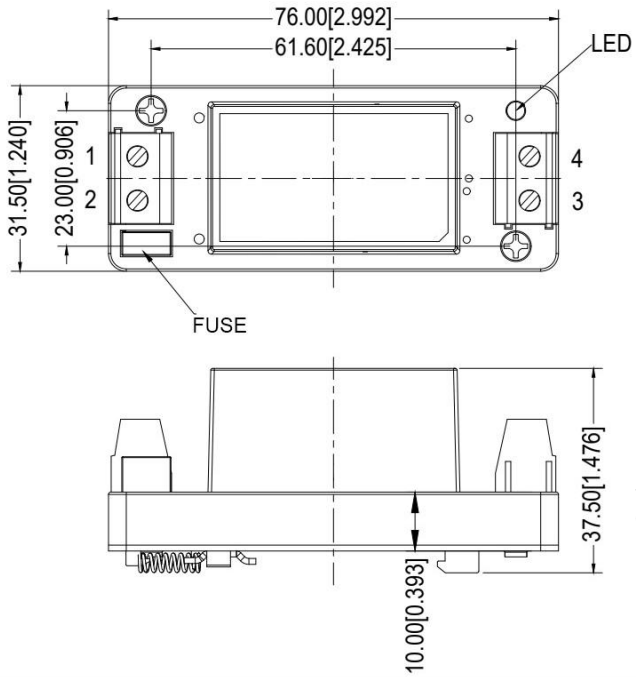

Unit: mm[inch]
Lead wires gauge: 24-12AWG
Screwing torque: 0.4 N.m Max
General tolerance: ±1.00[±0.039]

Terminal Function Description

Terminal No.	1	2	3	4
Function	AC(L)	AC(N)	-Vo	+Vo

Application Notice

1.The product should be used according to the specifications, otherwise it could be permanently damaged.

2. A fuse should be used at the input.

3. The product performance cannot be guaranteed if it works at a lower load than the minimum load defined.

4. The product performance cannot be guaranteed if it works at over-load condition.

5. Unless otherwise specified, all values or indicators on this datasheet are tested at Ta=25℃, humidity<75%RH, nominal input voltage and rated load (pure resistance load).

6. All values or indicators on this datasheet have been tested based on Aipupower test specifications.

7.The specifications are specially for the parts listed on this datasheet, any other non-standard model performances could be out of the specifications. Please contact our technician for specific requirements.

8. Aipupower can provide customization service.

Guangzhou Aipu Electron Technology Co., Ltd
Address: Building 4, HEDY Park, No.63, Punan Road, Huangpu Dist, Guangzhou, China.
Tel: 86-20-84206763 Fax: 86-20-84206762 HOTLINE: 400-889-8821
E-mail: sales@aipu-elec.com Website: https://www.aipupower.com

Guangzhou Aipu Electron Technology Co., Ltd reserves the copyright and right of final interpretation.