Typical Features

- Wide input voltage range 85-528VAC/120-746VDC
- No load power consumption ≤0.2W @230VAC
- Efficiency up to 80% (Typ.)
- Operating temperature from -40℃ to +105℃
- Switching Frequency 65KHz
- Short circuit & over current protections
- Isolation voltage 4250VAC/6000VDC
- Altitude during operating 4000m Max
- Compliant with IEC/EN62368/UL62368
- With CE certificate
- Mini size open-frame, industry level design
- PCB SIP mounting

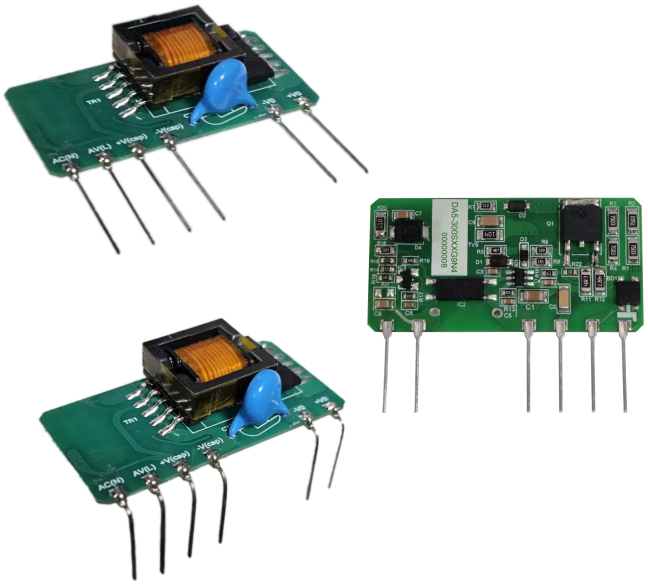

Application Field

DA5-300SXXG9N4(-1) Series ---- Compact size, high efficiency open-frame power supplies with wide input voltage range (both AC and DC available), low ripple, low temperature rise, low standby power consumption, high efficiency, high reliability, safety isolated and compliance with IEC/EN62368/UL62368. This series of products can be widely used in the fields of Industry, Office devices, Electric power and Household devices, etc. The additional circuit for EMC is recommended for the application with high EMC requirement.

Typical Product List

Certificate	Part No.	Input Voltage Range		Output Specifications			Max Capacitive Load @230VAC	Ripple & Noise 20MHz (Max)	Efficiency @full Load 230VAC (Typ.)
		Nominal	Range	Power	Voltage	Current			
		(VAC)	(VAC)	P(W)	Vo (VDC)	Io (mA)	(uF)	mVp-p	%
CE	DA5-300S05G9N4(-1)	230	85-528	5	5	1000	3000	80	73
CE	DA5-300S09G9N4(-1)				9	555	3000	80	77
CE	DA5-300S12G9N4(-1)				12	420	2200	120	78
CE	DA5-300S15G9N4(-1)				15	333	1000	120	78
CE	DA5-300S24G9N4(-1)				24	210	600	120	80

Note 1: The Ripple & Noise should be tested with the external circuit.

Note 2: The typical value of efficiency is based on the product tested after half an hour burn-in at full load.

Note 3: The full load efficiency should be in ±2% of the typical value in this table. The efficiency is calculated by the way that the full output power is divided by the input power.

Note 4: Please contact Aipu sales for other output voltages requirement of this series but not listed in this table.

Note 5: The suffix -1 indicates the parts with pins 90°bent.

Guangzhou Aipu Electron Technology Co., Ltd reserves the copyright and right of final interpretation.

Input Specifications

Item	Test Condition	Min	Typ.	Max	Unit
Input voltage range	AC input	85	230	528	VAC
	DC input	120	325	746	VDC
Input frequency range	-	47	50	63	Hz
Input current	Input 115VAC	-	-	0.15	A
	Input 230VAC	-	-	0.10	
Surge current	Input 115VAC	-	-	10	
	Input 230VAC	-	-	17	
No-load power consumption	Input 230VAC	-	-	0.2	W
	Input 480VAC	-	-	0.5	
Leakage current	-	0.5mA TYP/ 230VAC/ 50Hz			
Recommended external fuse	-	2.0A/600VAC, Time-delay fuse (required)			
Hot-plug	-	NA			
ON/OFF Control	-	NA			

Output Specifications

Item		Test Condition	Min.	Typ.	Max.	Unit
Output voltage accuracy		Full input voltage range, any load	-	±1.0	±2.0	%
Line regulation		Rated Load	-	-	±0.5	%
Load regulation		Nominal input voltage, 20%~100% load	-	-	±2.0	%
Ripple & Noise		5%-100% load, 20MHz bandwidth	-	80	120	mVp-p
Minimum load		Single Output	0	-	-	%
Temperature drift coefficient		-	-	-	±0.03	%/℃
Turn-on delay time		Input 230VAC (full load)	-	-	1000	mS
Power-off hold up time		Input 230VAC (full load)	-	10	-	mS
Dynamic response	Overshoot range	25%~50%~25%	-5.0	-	+5.0	%
	Recovery time	50%~75%~50%	-	-	5.0	mS
Output overshoot		Full input voltage range	≤10			%Vo
Short circuit protection			Continuous, self-recovery			Hiccup
Over current protection		Input 230VAC	130%Io	-	200%Io	Hiccup

Note: The Ripple & Noise is tested by the Parallel-line method (refer to the following test instruction).

General Specifications

Item	Test Condition	Min.	Typ.	Max.	Unit
Switching frequency	-	60	65	75	KHz
Operating temperature	Refer to the Temperature Derating Graph	-40	-	+105	℃
Storage temperature	-	-40	-	+110	
Soldering temperature	Wave-soldering	260±4℃, Time 5-10S			
	Manual-soldering	360±8℃, Time 4-7S			
Relative humidity	-	10	-	90	%RH

Guangzhou Aipu Electron Technology Co., Ltd reserves the copyright and right of final interpretation.

Isolation voltage	I/P-O/P	Test 1min, leakage current ≤5mA	4250	-	-	VAC
			6000	-	-	VDC
Insulation resistance	I/P-O/P	@DC500V	100	-	-	MΩ
MTBF	MIL-HDBK-217F 25℃		300	-	-	K Hours
Safety standard			IEC/EN62368/UL62368			
Vibration	-		10-55Hz,10G, 30Min, along X, Y, Z			

Weight & Dimensions	Part No.	Weight (Typ)	Dimensions L x W x H	
	DA5-300SXXG9N4	8g	44.50X23.00X15.00 mm	1.752X0.906X0.591 inch

EMC Performance

Items			Test standards	Performance/Class
EMC	EMI	CE	CISPR32/EN55032	CLASS B (with the Recommend Circuit 2)
		RE	CISPR32/EN55032	CLASS B (with the Recommend Circuit 2)
	EMS	RS	IEC/EN 61000-4-3	10V/m perf. Criteria B (with the Recommend Circuit 2)
		CS	IEC/EN61000-4-6	10 Vr.m.s perf. Criteria B (with the Recommend Circuit 2)
		ESD	IEC/EN 61000-4-2	Contact ±4KV/Air ±8KV perf. Criteria B (with the Recommend Circuit 2)
		Surge	IEC/EN 61000-4-5	Line to line ±2KV/line to ground ±4KV perf. Criteria B (with the Recommend Circuit 2)
		EFT	IEC/EN 61000-4-4	±4KV perf. Criteria B (with the Recommend Circuit 2)

Product Characteristics Graphs

Input Voltage Derating Graph

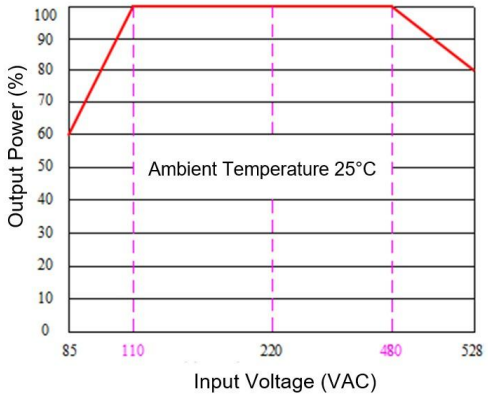

Temperature Derating Graph

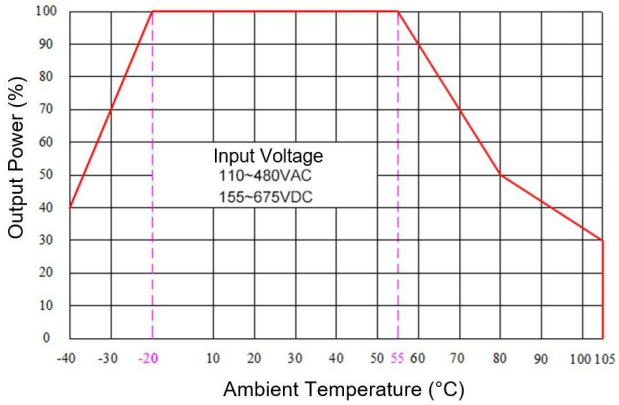

Altitude Derating Graph

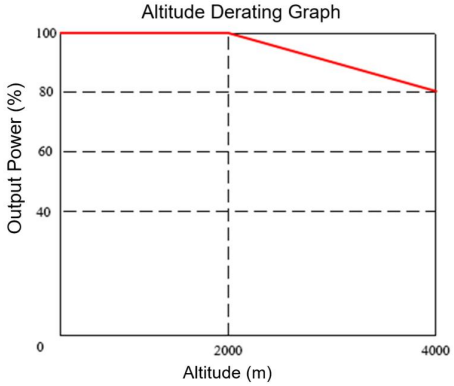

Guangzhou Aipu Electron Technology Co., Ltd reserves the copyright and right of final interpretation.

Note 1: The output power should be derated based on the input voltage derating Graph at 85~110VAC/120V~155VDC & 480~528VAC/675~746VDC.

Note 2: This product should operate under the condition of nature air, please contact us if it could be used at a closed space.

Recommended Circuits for Application

1. Typical application circuit diagram (for regular electric performances test)

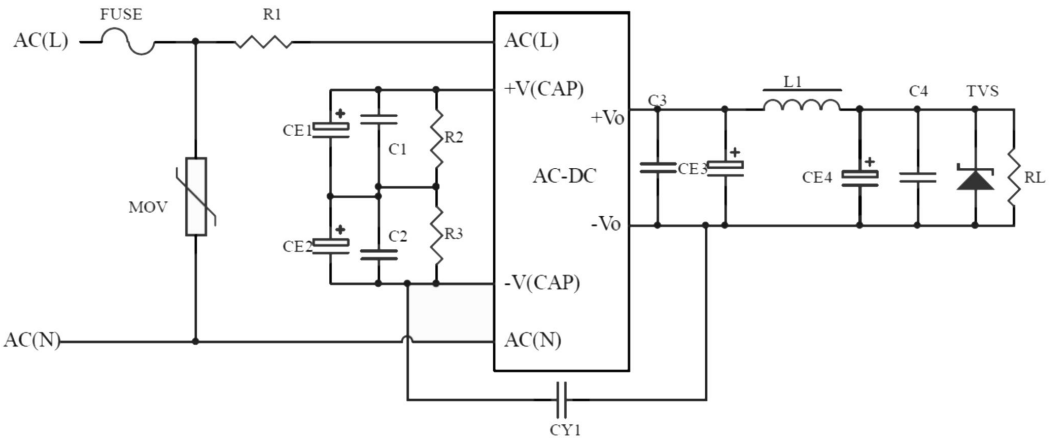

Figure - Circuit 1

Part No.	CE3, CE4 (required)	C1, C2	C3, C4	L1 (required)	TVS
DA5-300S05G9N4	470uF/10V	0.1uF/630V	0.1uF/50V	4.7uH/3A	SMBJ7.0A
DA5-300S09G9N4	330uF/16V			4.7uH/3A	SMBJ12A
DA5-300S12G9N4	220uF/16V			4.7uH/3A	SMBJ20A
DA5-300S15G9N4	220uF/25V			4.7uH/3A	SMBJ20A
DA5-300S24G9N4	220uF/35V			5.6uH/3A	SMBJ30A

Note:

1) 2A/600VAC time-delay fuse is recommended for FUSE which is required for the application.
2) 14D102K/4500A Varistor is recommended for MOV which is required.
3) 20Ω/1W wire-wound resistor is recommended for R1 which is required.
4) 33uF/450V electrolytic capacitors are recommended for CE1 & CE2, both are required.
5) R2 & R3 are required as the discharge-resistors, 1206/3M/0.25W is recommended.
6) TVS is Transient Voltage Suppressor
7) Y capacitor Y1/471K/500VAC is recommended for CY1 which is required.

2. Recommended EMC Circuit (for high EMC requirement)

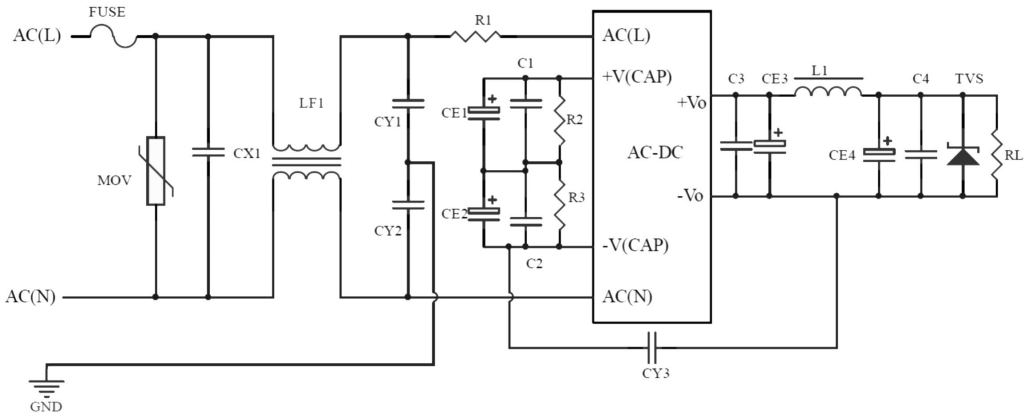

Figure - Circuit 2

Guangzhou Aipu Electron Technology Co., Ltd reserves the copyright and right of final interpretation.

Note:

1). 2A/600VAC time-delay fuse is recommended for FUSE which is required for the application

2). 14D102K/4500A Varistor is recommended for MOV which is required.

3). 20Ω/1W wire-wound resistor is recommended for R1 which is required.

4). Y1/471K/500VAC Y capacitors are recommended for CY1, CY2 & CY3 which are required

5). X capacitor (X2/334K/530VAC) is recommended for CX1 which is required.

6). Common-mode Choke (15mH/0.5A) is recommended for LF1 which is required.

Note: The other components can be same recommended as those in the table of typical application circuit 1.

Ripple & Noise Test Instructions (Parallel-line method, 20MHz Bandwidth)

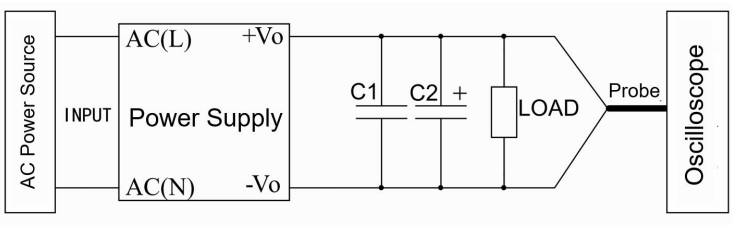

1. The Ripple & Noise test needs the cables in parallel, an oscilloscope that should be set at the Sample Mode, bandwidth 20MHz. 100M bandwidth probe with cap and ground removed. One polypropylene capacitor C1(0.1uF) and one high-frequency low-resistance electrolytic capacitor C2(10uF) are connected in parallel with the probe.

2. Refer to the test diagram, the converter output connects to the electronic load by the jig with cables which size should be defined according to the output current value. The test can start at the converter output terminals after input power on.

DA5-300SXXG9N4 Mechanical Dimensions

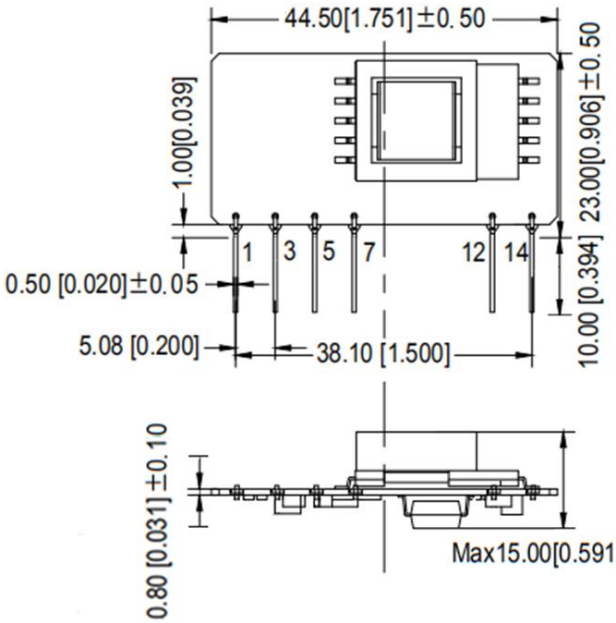

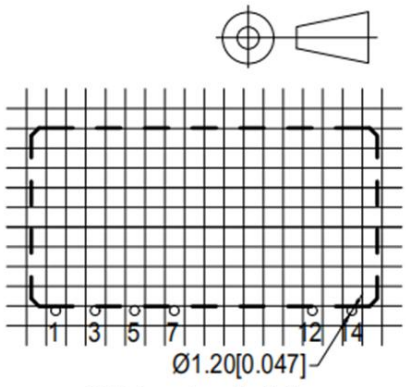

PCB layout vertical view
Grid 2.54x2.54[0.10x0.10]

Unit: mm[inch]
General tolerance: ±1.00[±0.039]
The components layout is only for reference, any deviation from the actual unit should be accepted.

Pin-out Function Description

Pin No.	1	3	5	7	12	14
Function	AC(N)	AC(L)	+V(cap)	-V(cap)	-Vo	+Vo

Guangzhou Aipu Electron Technology Co., Ltd reserves the copyright and right of final interpretation.

DA5-300SXXG9N4-1 Mechanical Dimensions

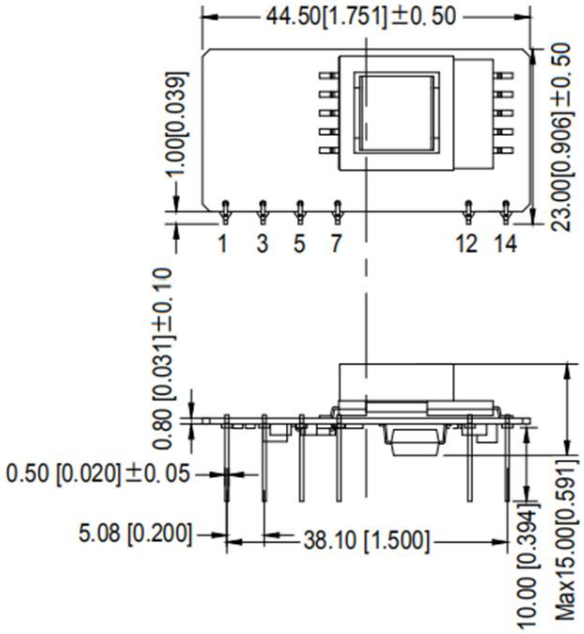

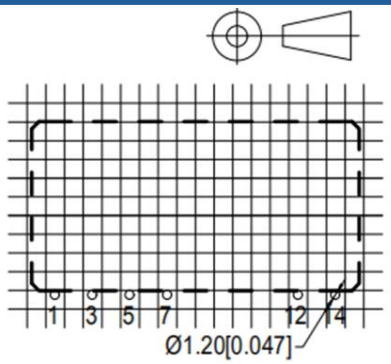

PCB layout vertical view
Grid 2.54x2.54[0.10x0.10]

Unit: mm[inch]
General tolerance: ±1.00[±0.039]
The components layout is only for reference, any deviation from the actual unit should be accepted.

Pin-out Function Description

Pin No.	1	3	5	7	12	14
Function	AC(N)	AC(L)	+V(cap)	-V(cap)	-Vo	+Vo

Application Notice

1.The product should be used according to the specifications, otherwise it could be permanently damaged.

2. The product performance cannot be guaranteed if it works at a lower load than the minimum load defined.

3. The product performance cannot be guaranteed if it works under over-load condition.

4. Unless otherwise specified, all values or indicators on this datasheet are tested at Ta=25℃, humidity<75%RH, nominal input voltage and rated load (pure resistance load).

5. All values or indicators on this datasheet have been tested based on Aipupower test specifications.

6.The specifications are specially for the parts listed on this datasheet, any other non-standard model performances could be out of the specifications. Please contact our technician for specific requirements.

7. Aipupower can provide customization service.

Guangzhou Aipu Electron Technology Co., Ltd
Address: Building 4, HEDY Park, No.63, Punan Road, Huangpu Dist, Guangzhou, China.
Tel: 86-20-84206763 Fax: 86-20-84206762 HOTLINE: 400-889-8821
E-mail: sales@aipu-elec.com Website: https://www.aipupower.com

Guangzhou Aipu Electron Technology Co., Ltd reserves the copyright and right of final interpretation.