AC/DC Open-frame Converter
DA10-380SXXG9N4 Series

Typical Features

- ◆ Wide input voltage range 85-528VAC/100-745VDC
- ◆ No load power consumption ≤0.3W @230VAC
- ◆ Efficiency 82% (Typ.) @230VAC
- ◆ Switching Frequency 65KHz (Typ.)
- ◆ Short circuit & over-current protections
- ◆ Isolation voltage 4000VAC between input & output
- ◆ PCB SIP mounting

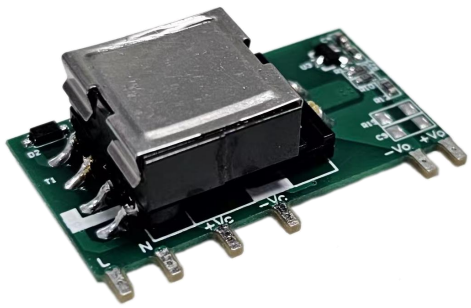

Application Field

DA10-380SXXG9N4 Series *--- Mini size, high efficiency open-frame power supplies with ultra-wide input voltage range (both AC & DC available), low ripple, low temperature rise, low standby power consumption, high efficiency, high reliability, safety isolated and compliance with IEC/EN62368/UL62368 standards. This series of products can be widely used in the fields of industry, office devices, electric power and household, etc. The additional circuit for EMC is recommended for the application with higher EMC requirement.*

Typical Product List

Certificate	Part No.	Output Specifications			Capacitive Load (Max)	Ripple & Noise 20MHz (Max)	Efficiency @Full Load, 230VAC
		Power	Voltage	Current			
		(W)	Vo (V)	Io (mA)	u F	mVp-p	% (Typ.)
-	DA10-380S05G9N4	10	5	2000	2000	100	77
	DA10-380S12G9N4	10	12	833	1000	100	82
	DA10-380S24G9N4	10	24	416	400	120	83

Note 1: The Ripple & Noise is tested by the twisted pair method, please refer to the following Test Instructions. The additional circuit is required for these open-frame converters.

Note 2: The Minimum efficiency could be in -2% of the typical values in this table.

Note 3: The typical value of efficiency is based on the product tested after half an hour burn-in at full load.

Note 4: Please contact Aipu sales for other output voltages requirement in this series but not listed in this table.

Input Specifications

Item	Operating Condition	Min	Typ.	Max	Unit
Input Voltage Range	AC input	85	230	528	VAC
	DC input	100	325	745	VDC
Input Frequency range	-	47	50	63	Hz
Input Current	115VAC	-	-	0.30	A
	230VAC	-	-	0.20	
	380VAC	-	-	0.15	
Surge Current	115VAC	-	-	15	A
	230VAC	-	-	20	
	380VAC	-	-	50	

Guangzhou Aipu Electron Technology Co., Ltd reserves the copyright and right of final interpretation.

No-load power consumption	Input 230VAC	-	-	0.3	W
	Input 528VAC	-	-	0.5	
External fuse	-	2.0A/ 500VAC, Time-delay fuse (necessary)			
Leakage current	-	0.25mA TYP / 230VAC/ 50Hz			
Hot plug	-	Unavailable			
ON/OFF control	-	Unavailable			

Output Specifications

Item		Operating Condition	Min	Typ.	Max	Unit
Voltage Accuracy		Input full voltage range, any load	-	±2.0	±3.0	%
Line Regulation		Rated load	-	-	±0.5	%
Load Regulation		Nominal input voltage, 20%~100% load	-	-	±1.0	%
Minimum Load		Single output	0	-	-	%
Turn-on Delay Time		Input 230VAC（Full Load）	-	500	-	mS
Power-off Hold-up Time		Input 230VAC（Full load）	-	200	-	mS
Dynamic Response	Overshoot Range	25%~50%~25% 50%~75%~50%	-5.0	-	+5.0	%
	Recovery Time		-	-	5.0	mS
Output Overshoot		Full input voltage range	≤10%Vo			%
Short Circuit Protection			Continuous, self-recovery			Hiccup
Drift Coefficient		-	-	±0.03%	-	%/℃
Over-current Protection		Full input voltage range	≥110% Io, self-recovery			Hiccup

General Specifications

Item		Operating Condition	Min	Typ.	Max	Unit
Switching Frequency		-	60	65	70	KHz
Operating Temperature		-	-40	-	+85	℃
		Please refer to the temperature derating graph				
Storage Temperature		-	-40	-	+105	
Soldering Temperature		Wave soldering	260±4℃, Time 5-10S			
		Manual welding	360±8℃, Time 4-7S			
Relative Humidity		-	10	-	90	%RH
Isolation voltage	I/P-O/P	Test 1 minute, leakage current ≤5mA	4000	-	-	VAC
Insulation resistance	I/P-O/P	@ DC500V	100	-	-	MΩ
Vibration		-	10-55Hz, 10G, 30Min, along X, Y, Z			
MTBF		-	MIL-HDBK-217F@25℃＞300,000H			

Guangzhou Aipu Electron Technology Co., Ltd reserves the copyright and right of final interpretation.

EMC Performance

Total Items		Sub Items	Test Standard	Performance/Class
EMC	EMI	CE	CISPR32/EN55022	CLASS B (with the Recommended Circuit 2)
		RE	CISPR32/EN55022	CLASS B (with the Recommended Circuit 2)
	EMS	ESD	IEC/EN 61000-4-2	Contact ±6KV / Air ±8KV Perf.Criteria B (with the Recommended Circuit 2)
		RS	IEC/EN 61000-4-3	10V/m perf. CriteriaB (with the Recommended Circuit 2)
		EFT	IEC/EN 61000-4-4	±2KV perf. Criteria B (with the Recommended Circuit 2)
			IEC/EN 61000-4-4	±4KV perf. Criteria B (with the Recommended Circuit 2)
		Surge	IEC/EN 61000-4-5	Line to line ±2KV / line to ground ±4KV (with the Recommended Circuit 2)
		CS	IEC/EN61000-4-6	10 Vr.m.s perf. Criteria B (with the Recommended Circuit 2)

Mechanical Dimensions

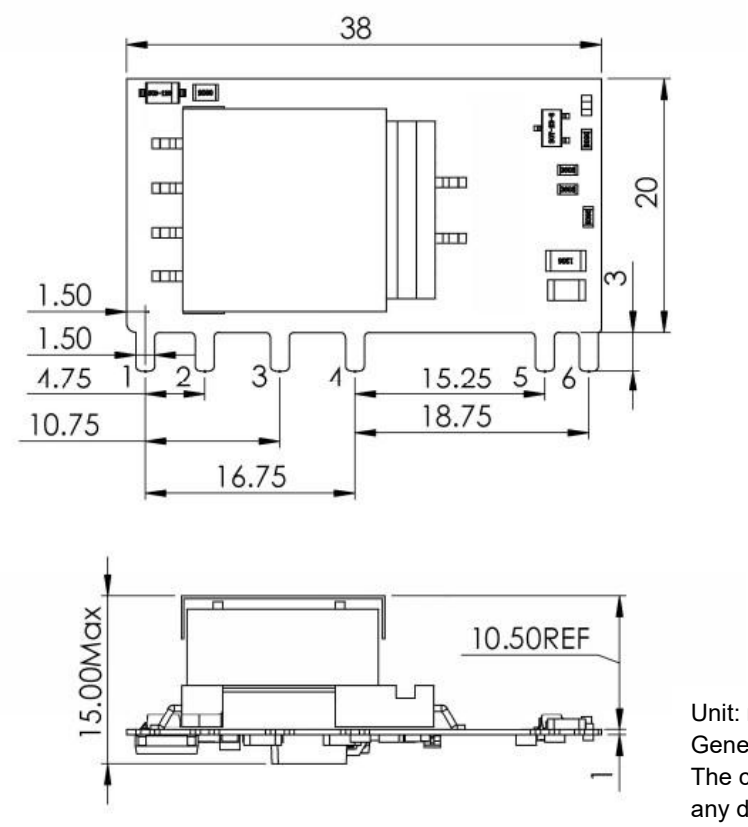

Unit: mm
General tolerance ±1.0
The components layout is only for reference, any deviation from the actual unit should be accepted.

Package Code	Dimensions L x W x H	
-	38 X 23 X 15 mm	1.496 X 0.906 X 0.591 inch

Pin-out Function Description

Pin No.	1	2	3	4	5	6
Single（S）	AC(L)	AC(N)	+V(CAP)	-V(CAP)	-Vo	+Vo

Guangzhou Aipu Electron Technology Co., Ltd reserves the copyright and right of final interpretation.

Ripple & Noise Test Instructions (Twisted Pair Method, 20MHz Bandwidth)

1. The Ripple & noise test needs 12# twisted pair cables, an oscilloscope which bandwidth should be set to 20MHz, 0.1uF polypropylene capacitor and 10uF high-frequency low-resistance electrolytic capacitor are connected in parallel with the probes (100M bandwidth). The oscilloscope should be set at the Sample Mode.
2. The test diagram is shown on the right. The converter output connects to the electronic load by the jig with cables which size should be defined according to the output current value. The twisted pair (length 30cm±2 cm) should be connected in parallel with the load, the location is as close as possible to the output pins or terminals. The test can start after input power on.

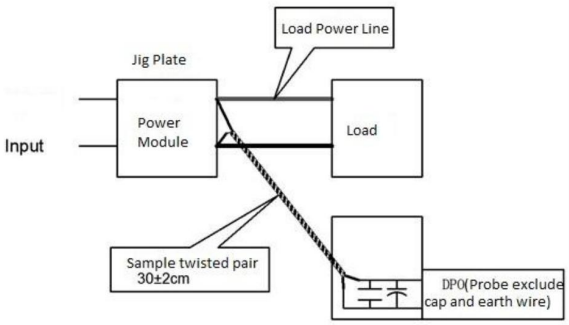

Product Characteristics Graphs

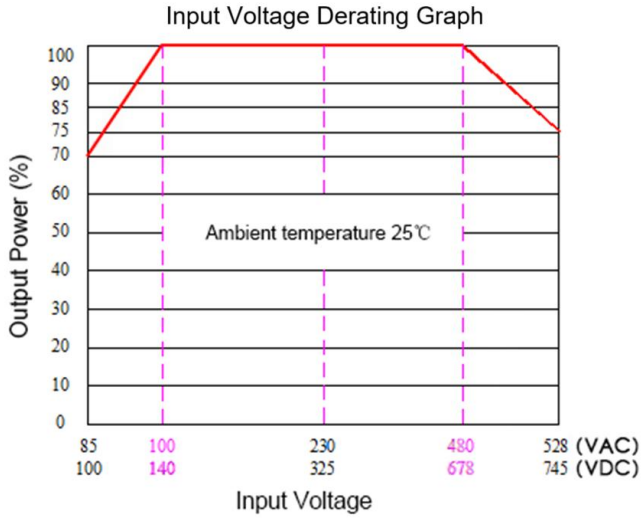

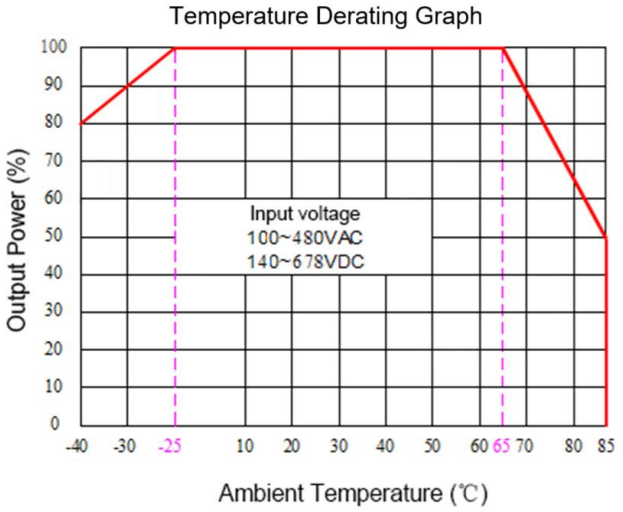

Note 1: The output power should be derated based on the input voltage derating graph at 85~100VAC/ 480~528VAC/100~140VDC/ 678~745VDC.

Note 2: This product should operate under the condition of natural air, please contact us if it could be used at a closed space.

Recommended Circuits for Application

1. Typical Application Circuit

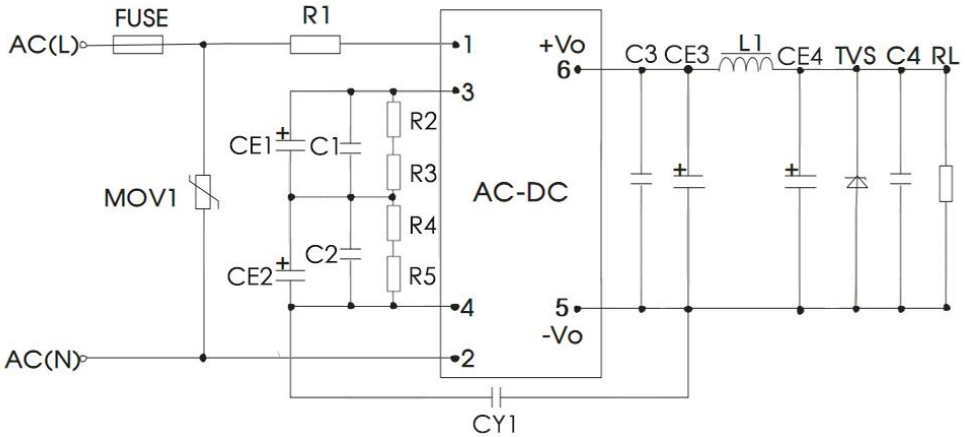

Figure - Circuit 1

Guangzhou Aipu Electron Technology Co., Ltd reserves the copyright and right of final interpretation.

Recommended parameters：

Part No.	CE1, CE2 (*)	CE3 (* Solid state capacitor)	L1 (*)	CE4 (* electrolytic capacitor)	C1, C2	C3, C4	TVS
DA10-380S05G9N4	47uF/450V	680uF/10V	2.2uH/5A	330uF/10V	0.1uF/630V	0.1uF/50V	SMBJ7.0A
DA10-380S12G9N4		470uF/16V		330uF/25V			SMBJ20A
DA10-380S24G9N4		470uF/35V		100uF/35V			SMBJ30A

Note

1. The * marked components in the table and all below recommended components are necessary for the application, not optional.
2. 2A/500Vac time-delay fuse is recommended.
3. 14D102K is recommended for MOV1.
4. 6.8 Ω/3W wire-wound resistor is recommended for R1.
5. 47uF/450V electrolytic capacitors are recommended for CE1 and CE2.
6. R2, R3, R4 and R5 are voltage equalizing resistors, 1MΩ/1206 is recommended.
7. 1nF/400V Y capacitor is recommended for CY1.

2. EMC Solution and Recommended Circuit

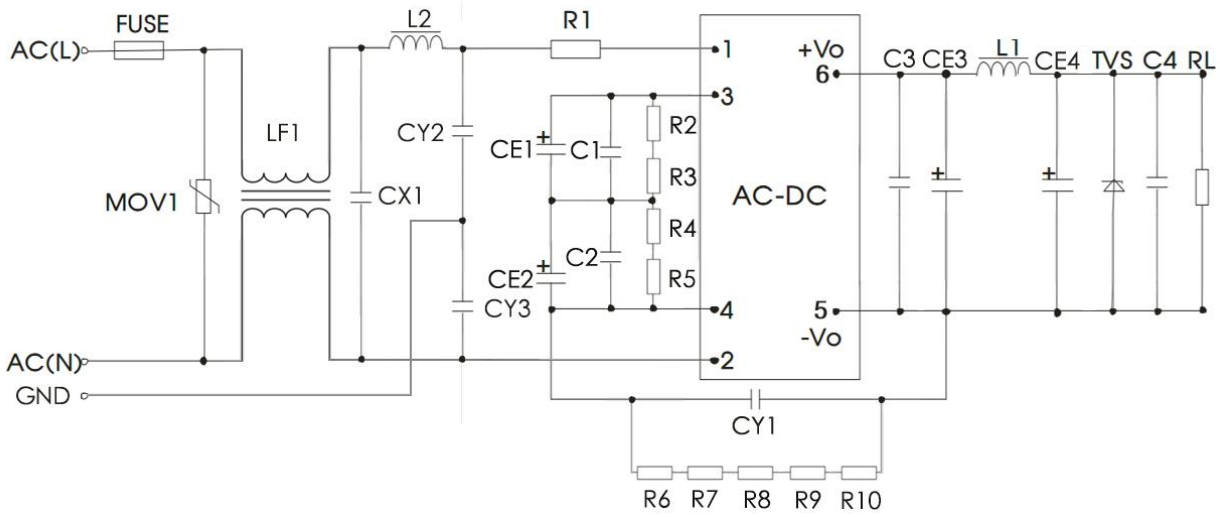

Figure - Circuit 2

Recommended parameters:

1. 2A/500Vac time-delay fuse is recommended (necessary).
2. 14D102K is recommended for MOV1 (necessary).
3. 6.8 Ω/3W wire-wound resistor is recommended for R1 (necessary).
4. 1nF/400V Y capacitors are recommended CY1, CY2 and CY3 (necessary).
5. 0.33uF/530VAC X capacitor is recommended for CX1 (necessary).
6. Common-mode choke 30mH/0.5A is recommended for LF1 (necessary).
7. Drum choke 820uH/0.5A is recommended for L2 (necessary).
8. For ESD protection, discharge needles are recommended together with R6, R7, R8, R9, R10 bleeder resistors (50MΩ/1206) connected in parallel with CY1.

Note: The other components parameters are same recommended as the typical application values.

Guangzhou Aipu Electron Technology Co., Ltd reserves the copyright and right of final interpretation.

3. Recommended Circuit for Hard Lightning Surge Environment

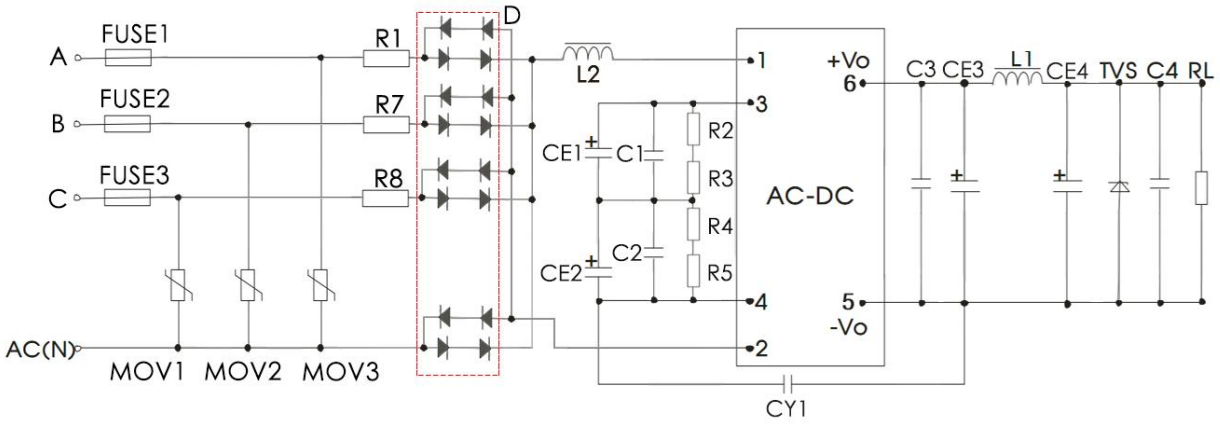

Figure - Circuit 3/1 - 4KV differential mode - full wave rectification

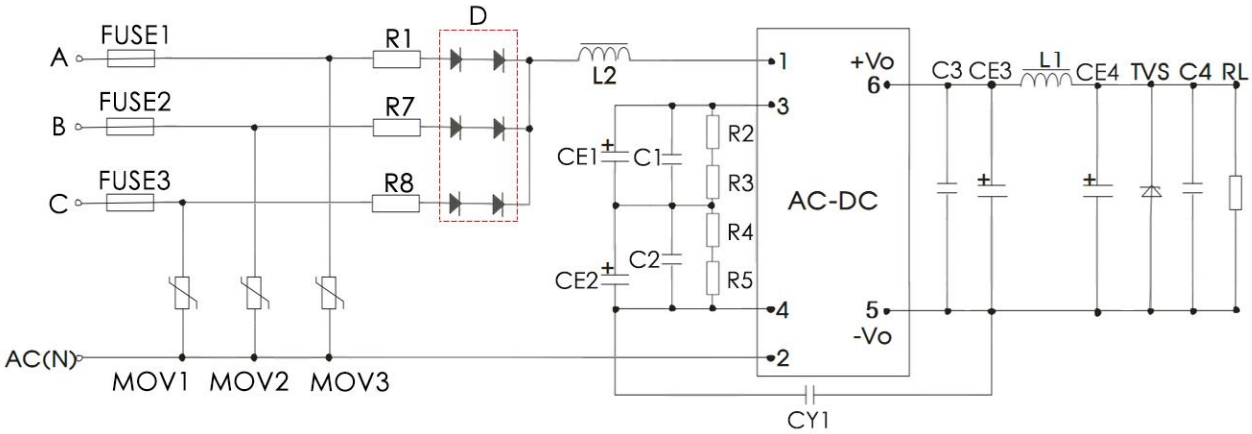

Figure - Circuit 3/2 - 4KV differential mode - half-wave rectification

Recommended parameters:

Component	Recommended Value
MOV1, MOV2, MOV3	14D911K
R1, R7, R8（Wire-wound resistors, necessary）	12Ω/5W
L2	2.2mH/4.81Ω Max/0.31A Min
D	2A/1000V
FUSE1, FUSE2, FUSE3（necessary）	6.3A/500V, Time-delay fuse
Note: R1, R7, R8 are input plug-in resistors. Wire-wound resistors are required, SMD resistors or carbon film resistors are not available.	

Guangzhou Aipu Electron Technology Co., Ltd reserves the copyright and right of final interpretation.

Application Notice

1.The product should be used according to the specifications, otherwise it could be permanently damaged.
2. A fuse should be used at input.
3. The product performance cannot be guaranteed if it works at a lower load than the minimum load defined.
4. The product performance cannot be guaranteed if it works under over-load condition.
5. Unless otherwise specified, all values or indicators on this datasheet are tested at Ta=25℃, humidity<75%RH, nominal input voltage and rated load.
6. All values or indicators on this datasheet have been tested based on Aipupower test specifications.
7.The specifications are specially for the parts listed on this datasheet, any other non-standard model performances could be out of the specifications. Please contact our technician for specific requirements.
8. Aipupower can provide customization service.
9. The product specifications may be modified without prior notice. Please refer to the published data sheet at Aipupower website.

Guangzhou Aipu Electron Technology Co., Ltd
Address: Building 4, HEDY Park, No.63, Punan Road, Huangpu Dist, Guangzhou, China.
Tel: 86-20-84206763 Fax: 86-20-84206762 HOTLINE: 400-889-8821
E-mail: sales@aipu-elec.com Website: https://www.aipupower.com

Guangzhou Aipu Electron Technology Co., Ltd reserves the copyright and right of final interpretation.