BDH 20014

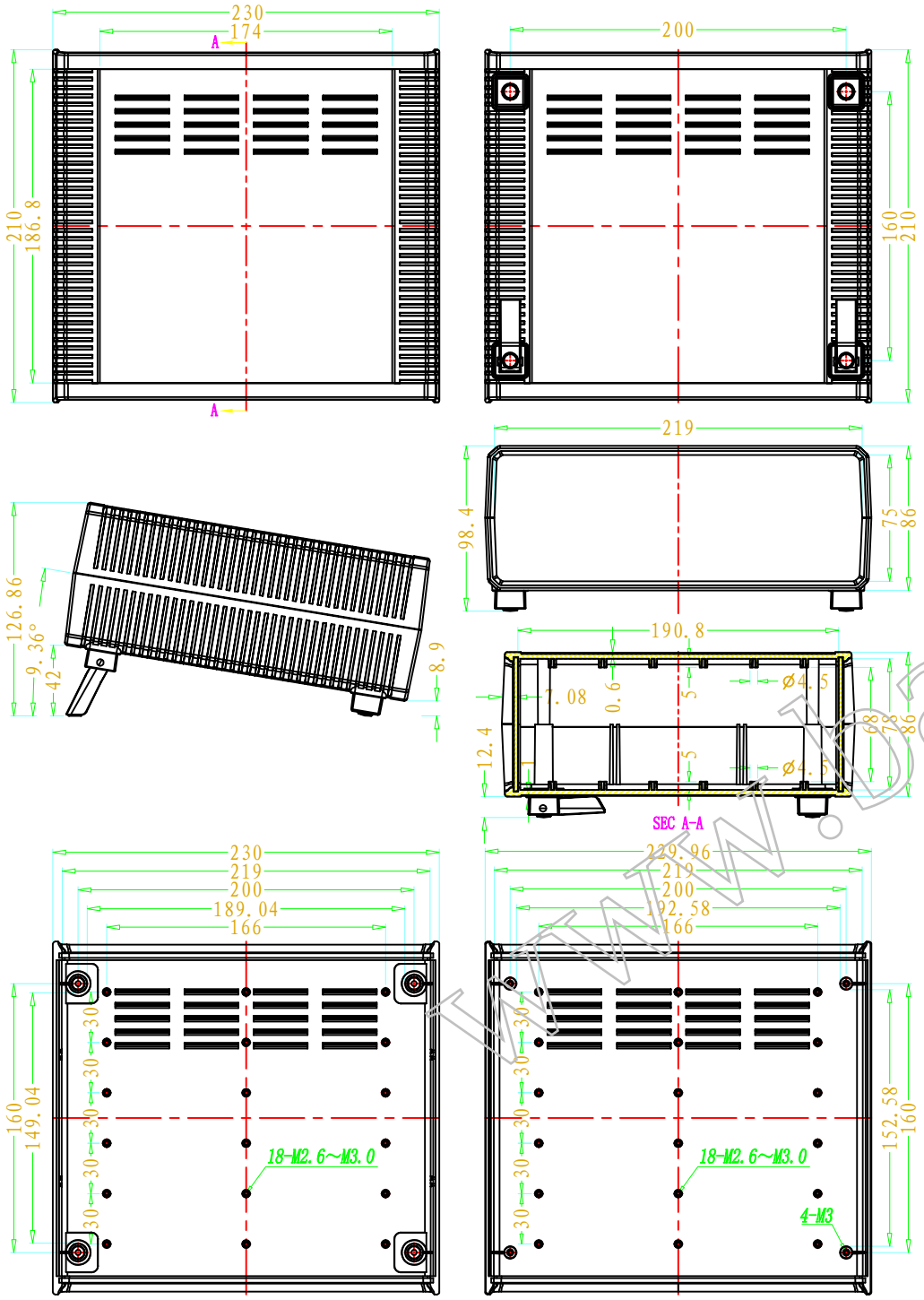

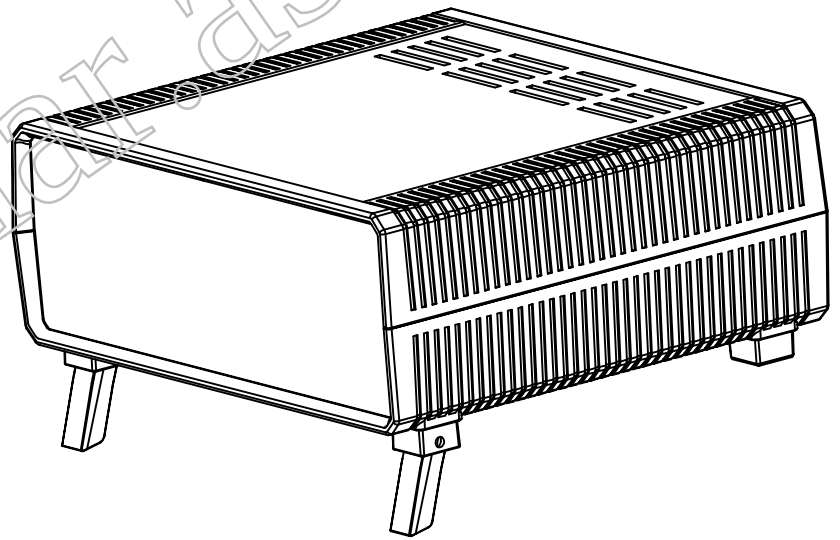

WWW.Bahar.asia

BAHAR
WWW.BAHAR.ASIA

Accessories

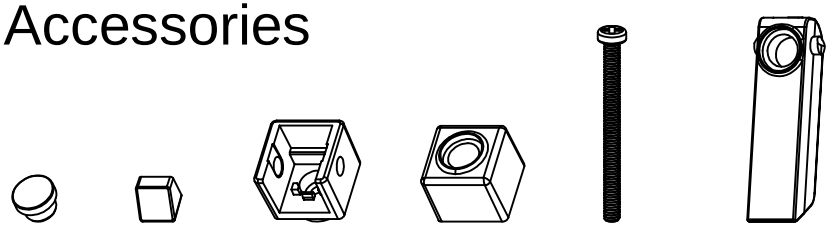

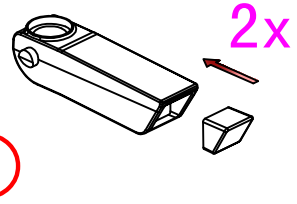

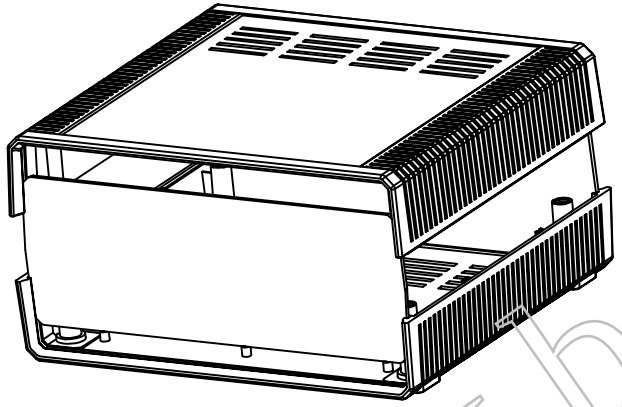

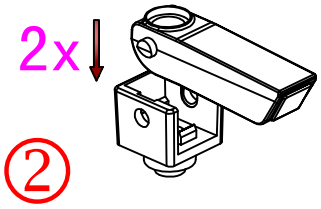

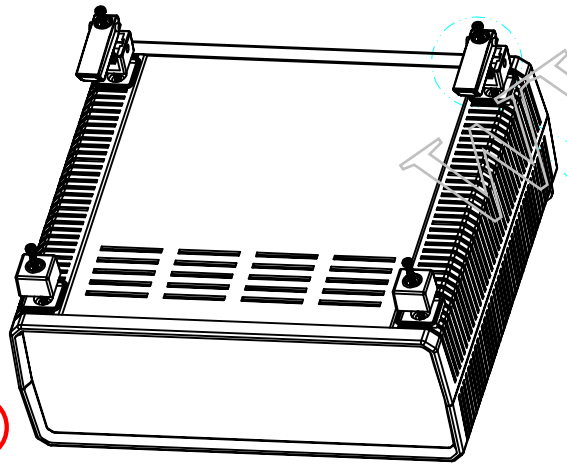

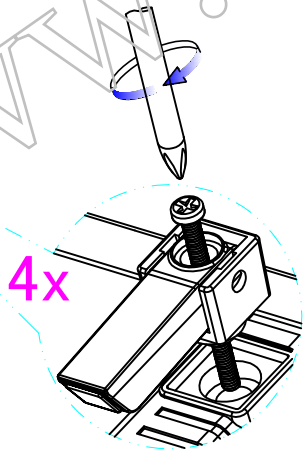

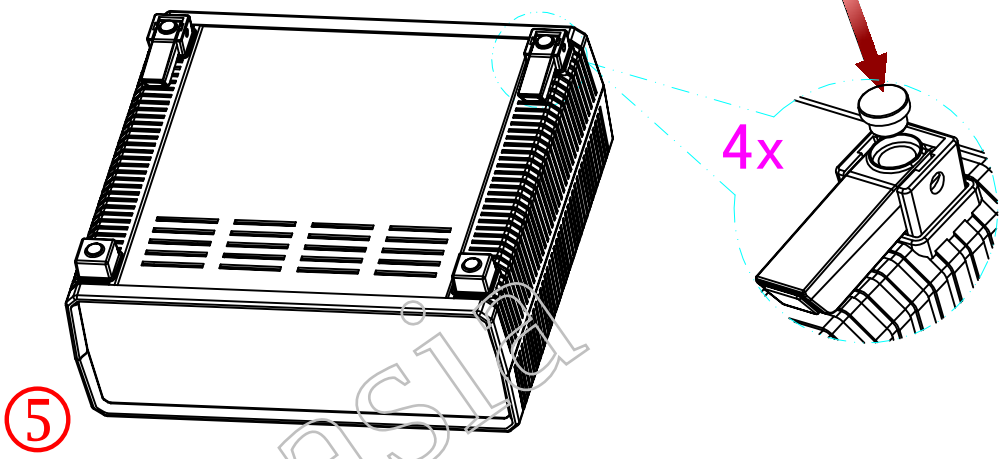

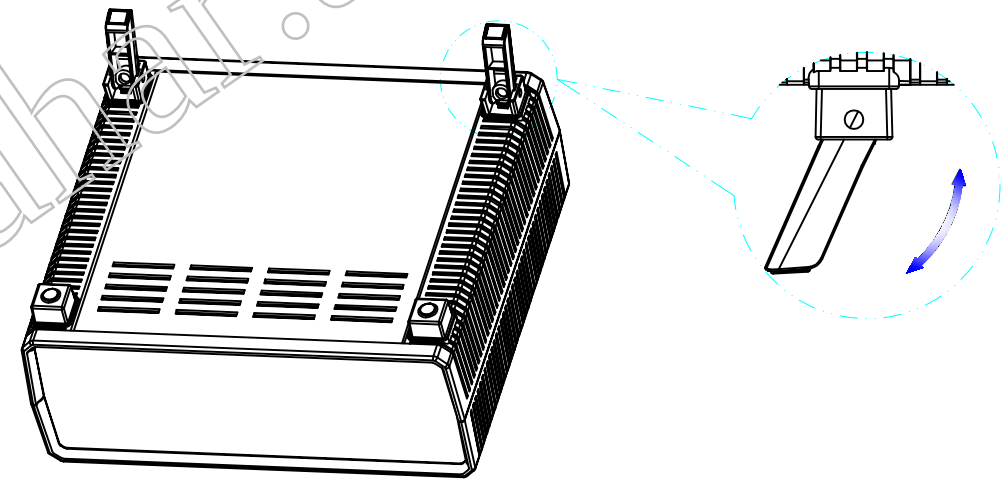

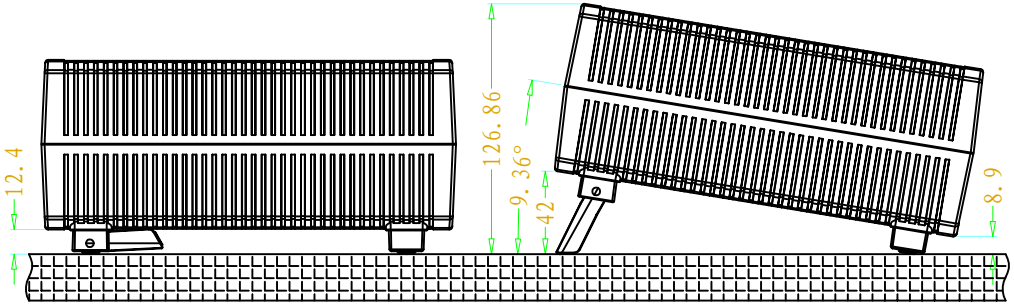

www.bahar.asia