BDH 20015

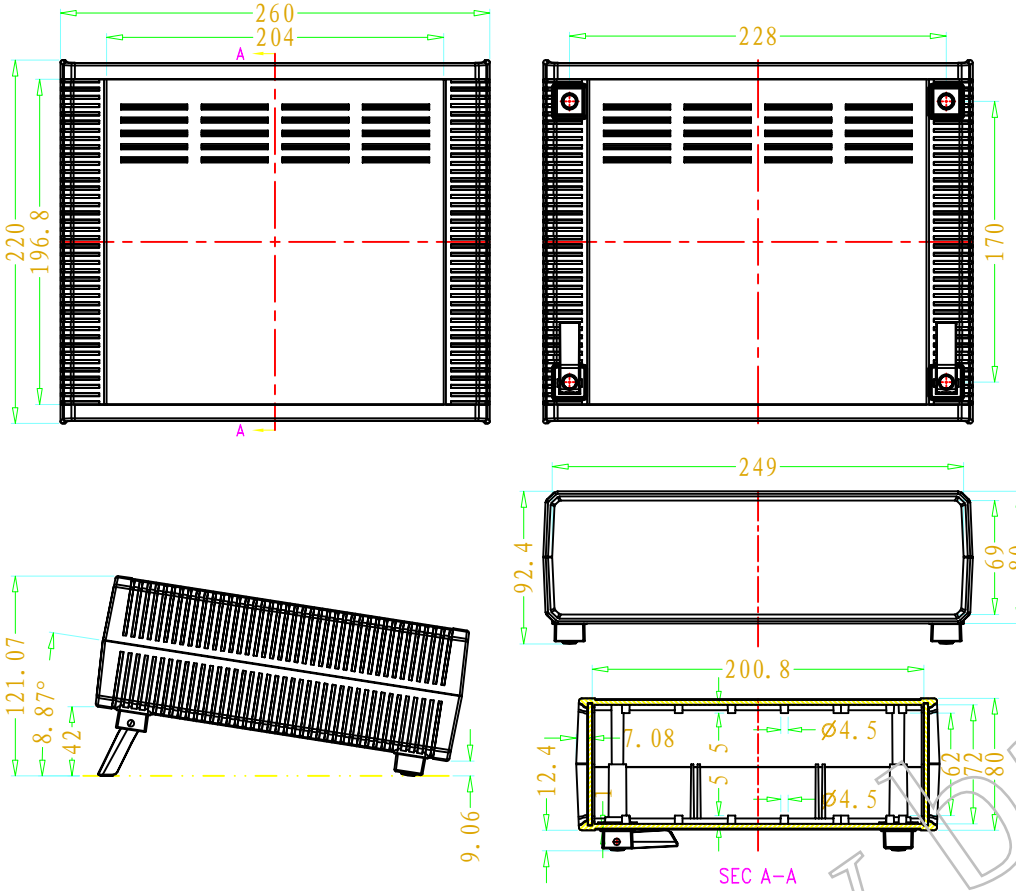

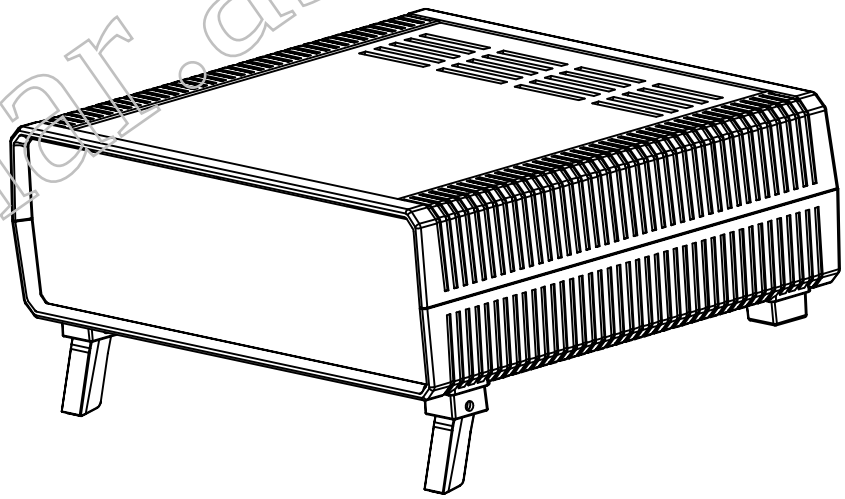

WWW.Bahar.asia

BAHAR
WWW.BAHAR.ASIA

Accessories

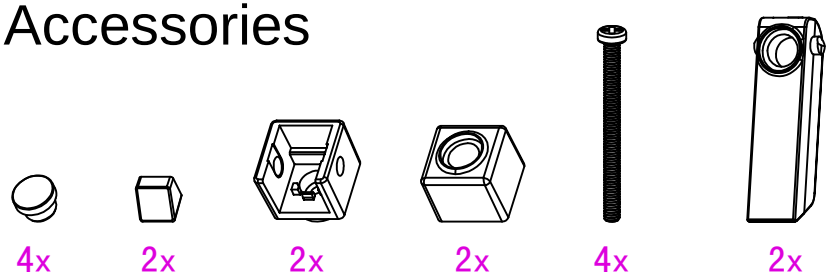

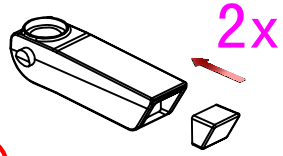

①

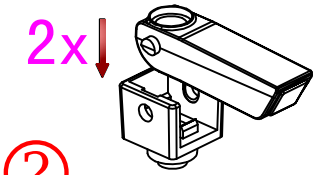

②

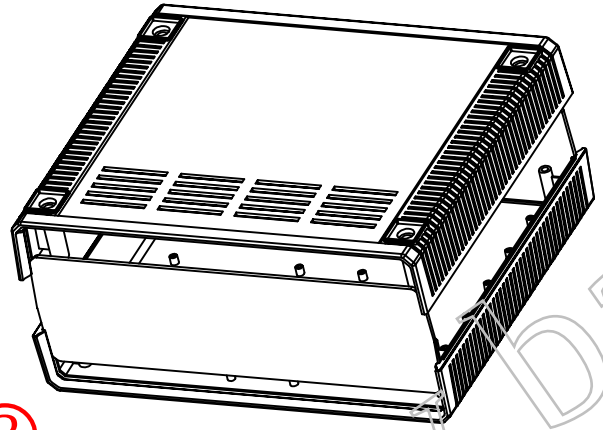

③

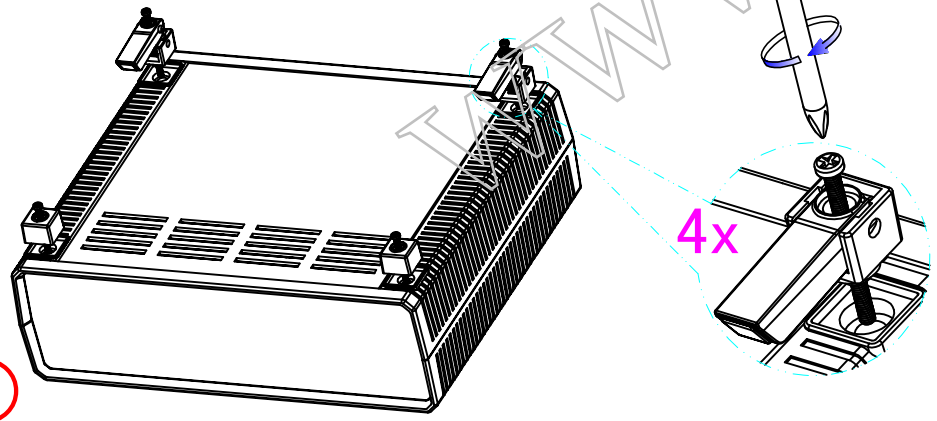

④

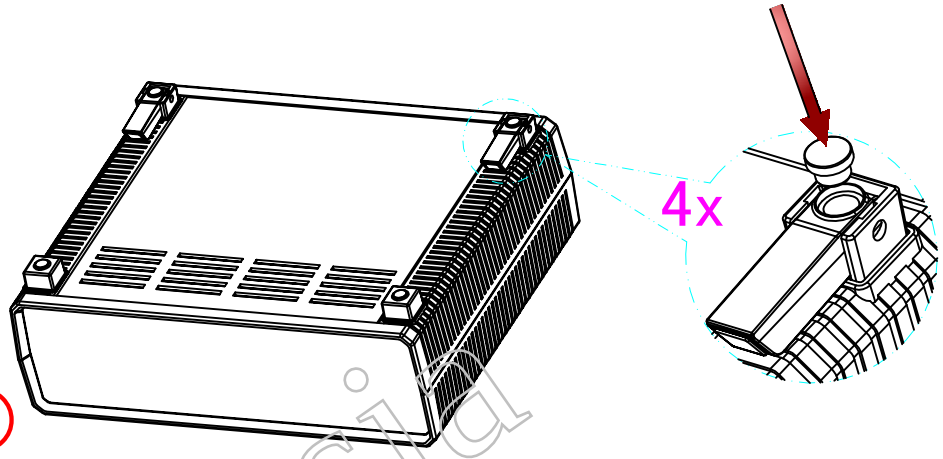

⑤

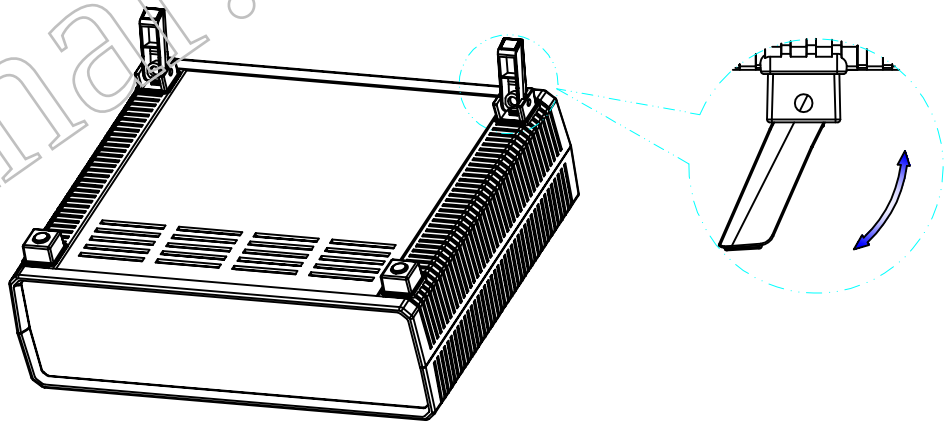

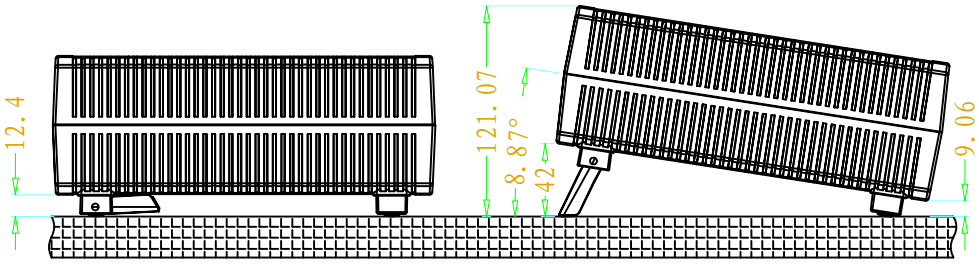

www.bahar.asia