BDH 20016

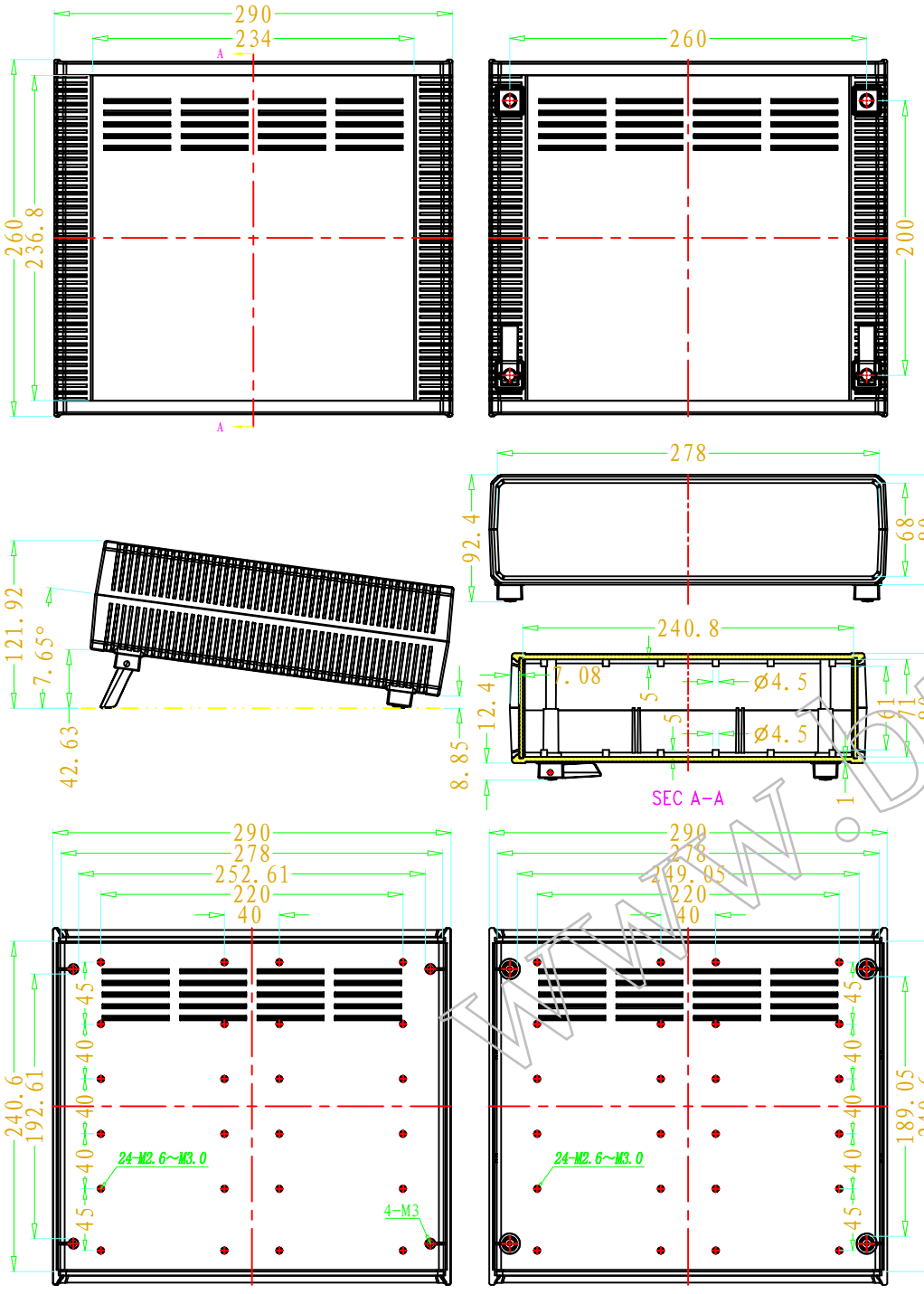

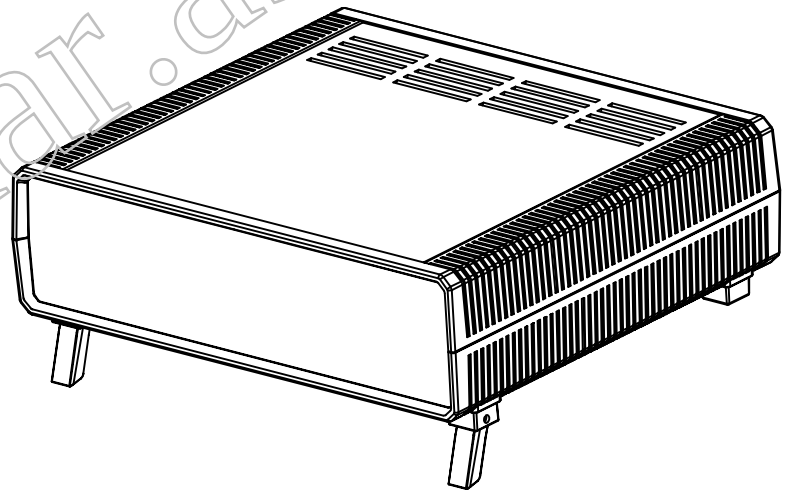

www.Bahar.asia

BAHAR
WWW.BAHAR.ASIA

Accessories



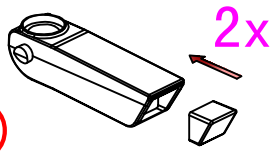

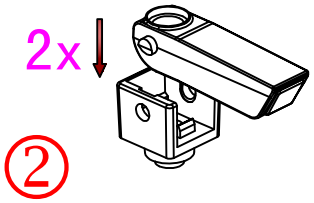

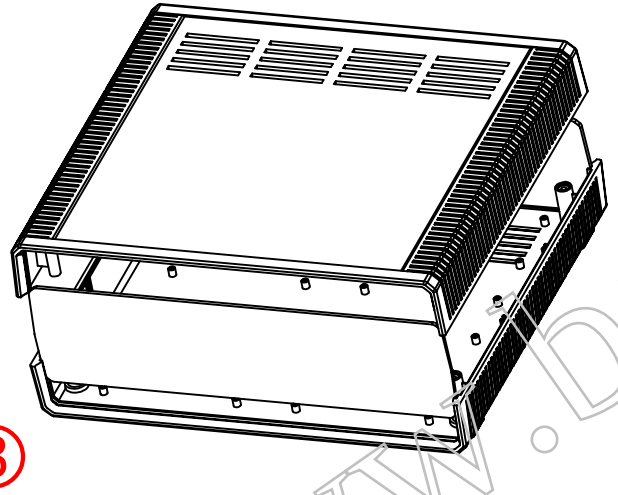

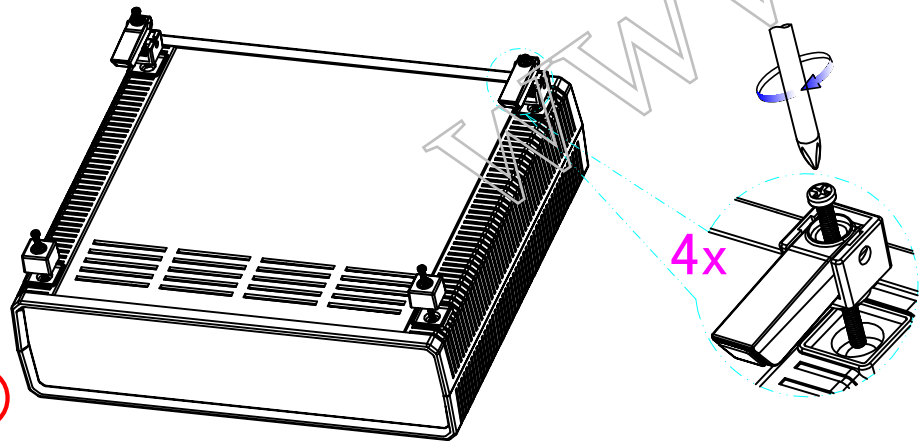

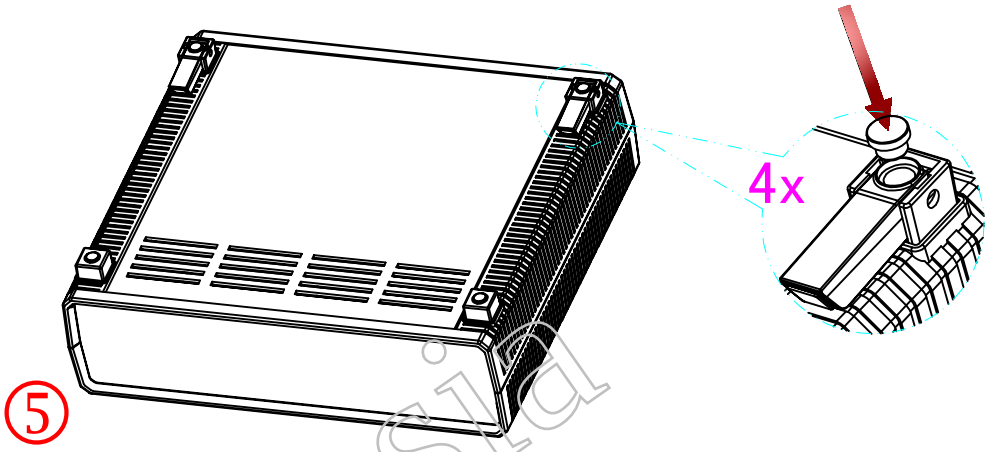

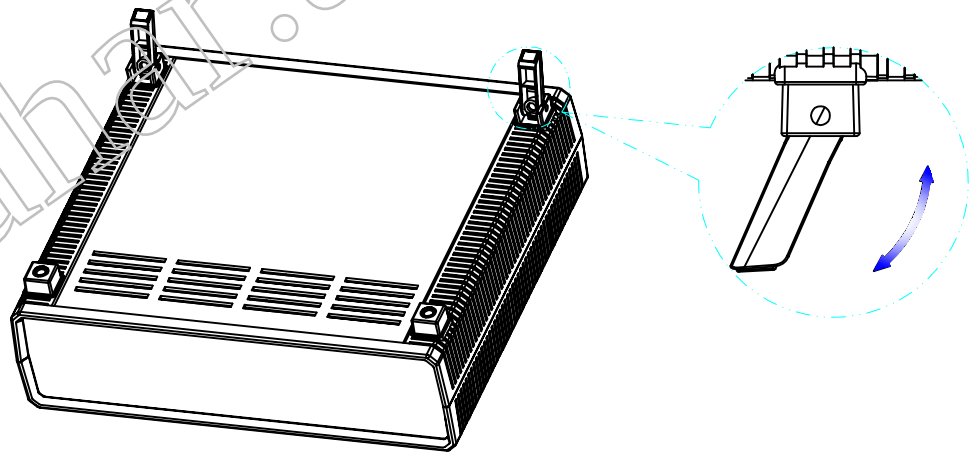

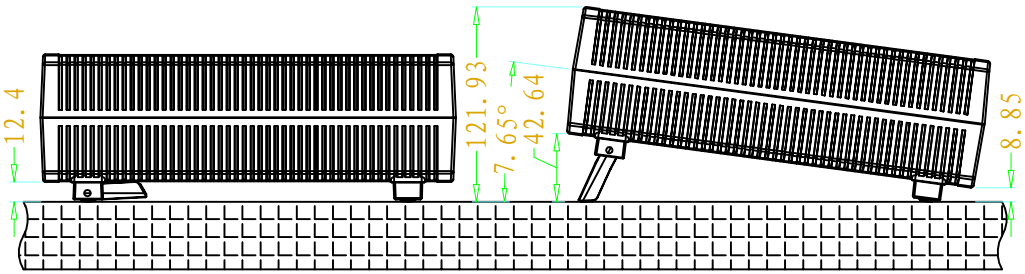

www.bahar.asia