TECHNICAL DATASHEET

CliQ II DIN Rail Power Supply

24V 91.2W 1 Phase, NEC Class 2 / DRP-24V100W1NN



Highlights & Features

- Universal AC input range without power de-rating
- UL 1310 safety approval
- NEC Class 2 power supply and Limited Power Source (LPS) approvals
- Built-in active PFC, PF > 0.99 @ 115Vac
- Full corrosion resistant Aluminium chassis
- Conforms to harmonic current IEC/EN 61000-3-2, Class A
- Conformal coating on PCBA to protect against chemical and dust pollutants
- Overvoltage / Overcurrent / Over Temperature / Short Circuit Protections

Safety Standards

CB Certified for worldwide use

Model Number: DRP-24V100W1NN
Unit Weight: 0.60 kg
Dimensions (L x W x D): 124 x 40 x 124 mm

General Description

Delta's CliQ II DIN Rail Power Supply series with UL 1310 and NEC Class 2 approvals offers start-of-the-art designs made to withstand harsh industrial environments. The rugged Aluminium case is both shock and vibration resistant according to IEC 60068-2 and adheres to IP20 protection level. The DRP-24V100W1NN can be used in general industrial applications, especially for dry indoor condition with the advantage of lower wiring costs for a system due to its compliance with NEC Class 2 requirements. The NEC (National Electrical Code) is a North American standard, which is regarded as a law in most North American states. The NEC describes the installation of electric conductors and equipments within or on buildings. Like the rest of the models in the CliQ series, conformal coating is applied on the PCBAs to protect against dust and chemical pollutants. The Class 2 power units operates over a wide temperature range of -25°C to +80° and universal AC input voltage range from 85Vac to 264Vac, the power will not de-rate for the entire input voltage range value. The product also includes overvoltage, overload, over temperature and short circuit protections for the output.

Model Information

CliQ II DIN Rail Power Supply

Model Number	Input Voltage Range	Output Voltage	Output Current
DRP-24V100W1NN	85-264Vac (120-375Vdc)	24Vdc	3.80A

Model Numbering

DR	P –	24V	100W	1	N	N
DIN Rail	Power Supply	Output Voltage	Output Power	Single Phase	NEC Class 2	N - Metal Case, without Class I, Div 2

All parameters are specified at 25°C ambient unless otherwise indicated.
www.DeltaPSU.com (January 2014, Rev. 00)

CliQ II DIN Rail Power Supply

24V 91.2W 1 Phase, NEC Class 2 / DRP-24V100W1NN

Specifications

Input Ratings / Characteristics

Nominal Input Voltage	100-240Vac
Input Voltage Range	85-264Vac
Nominal Input Frequency	50-60Hz
Input Frequency Range	47-63Hz
DC Input Voltage Range*	120-375Vdc
Input Current	< 1.00A @ 115Vac, < 0.53A @ 230Vac
Efficiency at 100% Load	> 88.0% @ 115Vac, > 89.0% @ 230Vac
Max Inrush Current (Cold Start)	< 30A @ 115Vac, < 60A @ 230Vac
Power Factor	> 0.99 @ 115Vac, > 0.94 @ 230Vac
Leakage Current	< 0.5mA @ 240Vac

*Fulfills tested condition, additional testing for system approval might be necessary.

Output Ratings / Characteristics

Nominal Output Voltage	24Vdc
Output Voltage Tolerance	± 2% (initial set point tolerance from factory)
Output Voltage Adjustment Range	22-24
Output Current	3.80A
Output Power	91.2W
Line Regulation	< 0.5% (@ 85-264Vac input, 100% load)
Load Regulation	< 1% at -25°C to +25°C < 2% at +25°C to +50°C (@ 85-264Vac input, 0-100% load)
PARD (20MHz)	< 150mVpp
Rise Time	< 100ms @ nominal input (100% load)
Start-up Time	< 2,000ms @ nominal input (100% load)
Hold-up Time	> 20ms @ 115Vac, > 30ms @ 230Vac (100% load)
Dynamic Response (Overshoot & Undershoot O/P Voltage)	± 5% @ 0-100% load
Start-up with Capacitive Loads	8,000µF Max

CliQ II DIN Rail Power Supply

24V 91.2W 1 Phase, NEC Class 2 / DRP-24V100W1NN

Mechanical

Case Cover / Chassis		Aluminium
Dimensions (L x W x D)		124 x 40 x 124 mm
Unit Weight		0.60 kg
Indicator		Green LED (DC OK)
Cooling System		Convection
Terminal	Input	3 Pins (Rated 600V/35A)
	Output	4 Pins (Rated 300V/28A)
Wire		AWG 18-12
Mounting Rail		Standard TS35 DIN Rail in accordance with EN 60715
Noise (1 Meter from power supply)		Sound Pressure Level (SPL) < 40dBA

Environment

Surrounding Air Temperature	Operating	-25°C to +80°C
	Storage	-25°C to +85°C
Power De-rating	Vertical Mounting	> 50°C de-rate power by 2.5% / °C, > 70°C de-rate power by 4% / °C
	Horizontal Mounting	> 40°C de-rate power by 2.5% / °C
Operating Humidity		5 to 95% RH (Non-Condensing)
Operating Altitude		0 to 2,500 Meters
Shock Test (Non-Operating)		IEC 60068-2-27, 30G (300m/S²) for a duration of 18ms, 1 times per direction, 2 times in total
Vibration (Non-Operating)		IEC 60068-2-6, 10Hz to 500Hz @ 30m/S² (3G peak); 60 min per axis for all X, Y, Z direction
Pollution Degree		2

Protections

Overvoltage	< 32V, ±10%, SELV Output, Hiccup Mode, Non-Latching (Auto-Recovery)
Overload	< 100W, Constant Current, Hiccup Mode (Auto-Recovery)
Overcurrent	< 8A, Constant Current, Hiccup Mode (Auto-Recovery)
Over Temperature	< 80°C Surrounding Air Temperature @ 100% load, Non-Latching (Auto-Recovery)
Short Circuit	Hiccup Mode, Non-Latching (Auto-Recovery when the fault is removed)
Degree of Protection	IP20
Protection Against Shock	Class I with PE* connection

*PE: Primary Earth

CliQ II DIN Rail Power Supply

24V 91.2W 1 Phase, NEC Class 2 / DRP-24V100W1NN

Reliability Data

MTBF		> 800,000 hrs. as per Telcordia SR-332 I/P: 115Vac, O/P: 100% load, Ta: 25°C
Expected Cap Life Time		10 years (115Vac & 230Vac, 50% load @ 40°C)

Safety Standards / Directives

Electrical Equipment in Power Installations		EN 50178 / IEC 62103
Electrical Safety		SIQ to EN 60950-1, UL/cUL recognized to UL 60950-1 and CSA C22.2 No. 60950-1, CB scheme to IEC 60950-1, Limited Power Source (LPS)
Industrial Control Equipment		UL/cUL listed to UL 508 and CSA C22.2 No. 107.1-01, CSA to CSA C22.2 No. 107.1-01 (File No. 181564)
Class 2 Power Supply		UL/cUL recognized to UL 1310 and CSA C22.2 No. 223
CE		In conformance with EMC Directive 2004/108/EC and Low Voltage Directive 2006/95/EC
Material and Parts		RoHS Directive 2011/65/EU Compliant
Galvanic Isolation	Input to Output	4.0KVac
	Input to Ground	1.5KVac
	Output to Ground	1.5KVac

CliQ II DIN Rail Power Supply

24V 91.2W 1 Phase, NEC Class 2 / DRP-24V100W1NN

EMC

EMC / Emissions		CISPR 22, EN 55022, CISPR 11, EN 55011, FCC Title 47: Class B
Component Power Supply for General Use		EN 61204-3
Immunity to		EN 55024, EN 61000-6-2
Electrostatic Discharge	IEC 61000-4-2	Level 4 Criteria A[1)] Air Discharge: 15kV Contact Discharge: 8kV
Radiated Field	IEC 61000-4-3	Level 3 Criteria A[1)] 80MHz-1GHz, 10V/M, 80% modulation (1KHz) 1.4GHz-2GHz, 3V/M, 80% modulation (1KHz) 2GHz-2.7GHz, 1V/M, 80% modulation (1KHz)
Electrical Fast Transient / Burst	IEC 61000-4-4	Level 3 Criteria A[1)] 2kV
Surge	IEC 61000-4-5	Level 3 Criteria A[1)] Common Mode[2)]: 2kV Differential Mode[3)]: 1kV
Conducted	IEC 61000-4-6	Level 3 Criteria A[1)] 150kHz-80MHz, 10Vrms
Power Frequency Magnetic Fields	IEC 61000-4-8	Criteria A[1)] 30A/Meter
Voltage Dips	IEC 61000-4-11	100% dip; 1 cycle (20ms); Self Recoverable
Low Energy Pulse Test (Ring Wave)	IEC 61000-4-12	Level 3 Criteria A[1)] Common Mode[2)]: 2kV Differential Mode[3)]: 1kV
Harmonic Current Emission		IEC/EN 61000-3-2, Class A
Voltage Fluctuation and Flicker		IEC/EN 61000-3-3

1) Criteria A: Normal performance within the specification limits
2) Asymmetrical: Common mode (Line to earth)
3) Symmetrical: Differential mode (Line to line)

CliQ II DIN Rail Power Supply

24V 91.2W 1 Phase, NEC Class 2 / DRP-24V100W1NN

Block Diagram

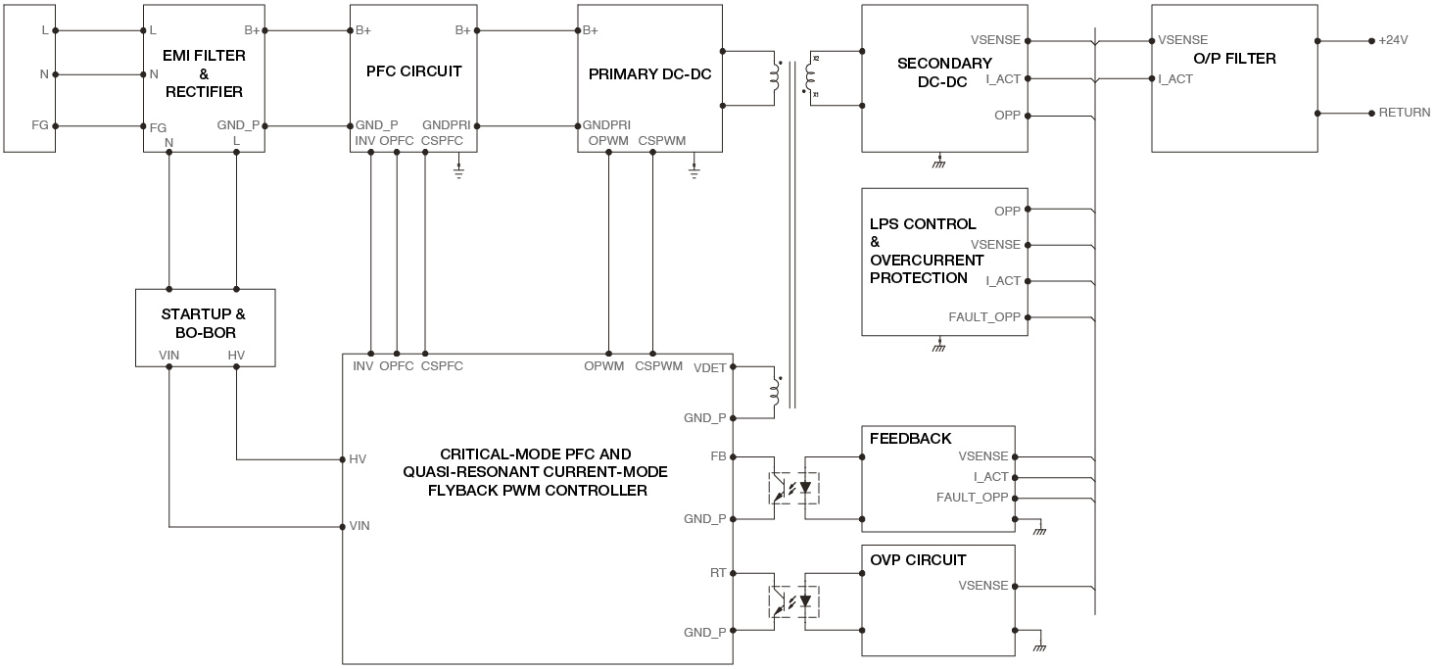

Device Description

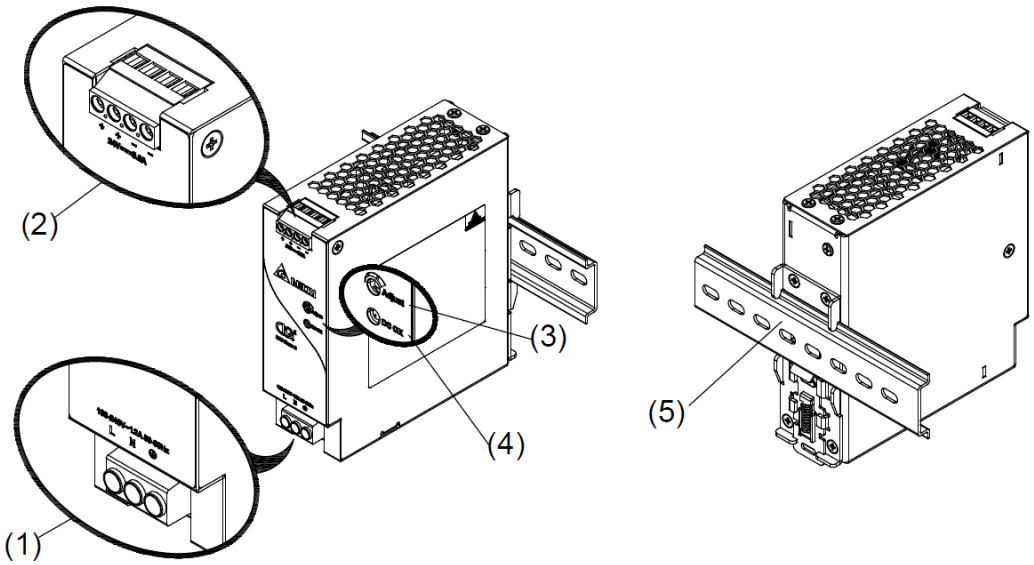

1) Input terminal block connector
2) Output terminal block connector
3) DC Voltage adjustment potentiometer
4) DC OK control LED (Green)
5) Universal mounting rail system

All parameters are specified at 25°C ambient unless otherwise indicated.
www.DeltaPSU.com (January 2014, Rev. 00)

CliQ II DIN Rail Power Supply

24V 91.2W 1 Phase, NEC Class 2 / DRP-24V100W1NN

Dimensions

L x W x D: 124 x 40 x 124 mm

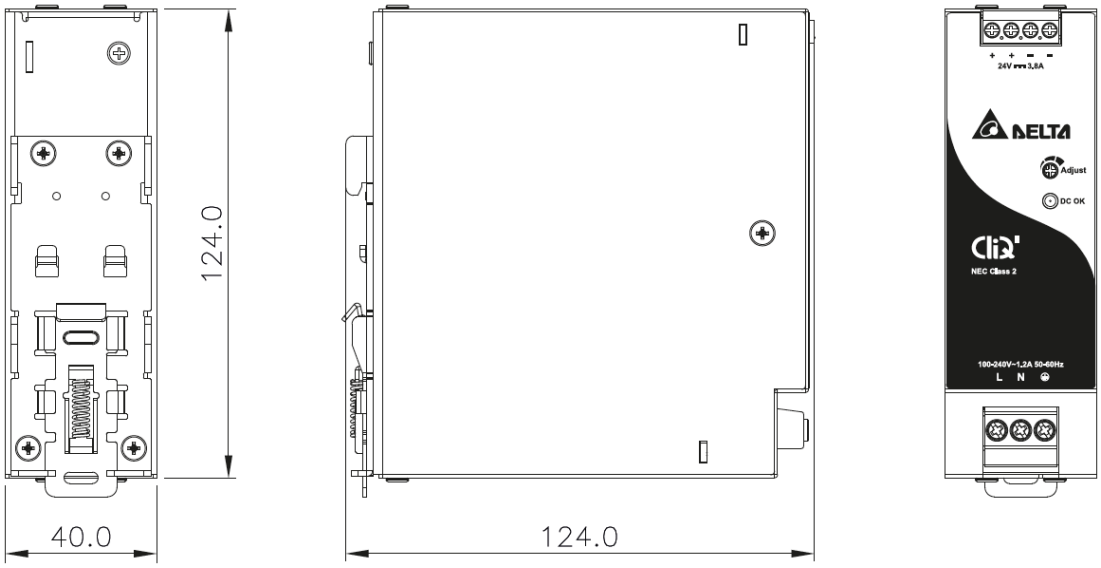

Engineering Data

De-rating

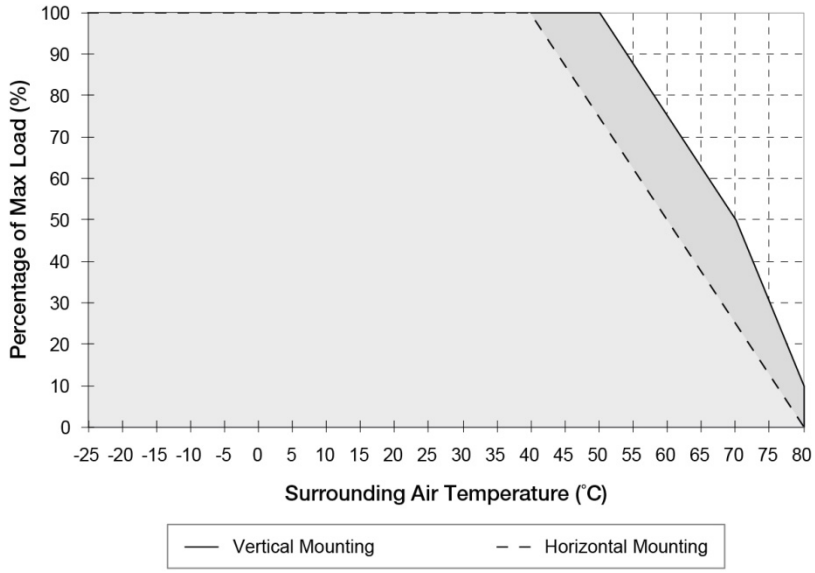

Fig. 1 **De-rating for Vertical Mounting Orientation**
> 50°C de-rate power by 2.5% / °C,
> 70°C de-rate power by 4% / °C

De-rating for Horizontal Mounting Orientation
> 40°C de-rate power by 2.5% / °C

Note

1. Power supply components may degrade, or be damaged, when the power supply is continuously used outside the shaded region, refer to the graph shown in Fig. 1.
2. If the output capacity is not reduced when the surrounding air temperature > 50°C (Vertical) or > 40°C (Horizontal), the device may run into Over Temperature Protection. When activated, the output voltage will go into bouncing mode and will recover when the surrounding air temperature is lowered or the load is reduced as far as necessary to keep the device in working condition.
3. In order for the device to function in the manner intended, it is also necessary to keep a safety distance of 20mm with adjacent units while the device is in operation.
4. Depending on the surrounding air temperature and output load delivered by the power supply, the device can be very hot!
5. If the device has to be mounted in any other orientation, please do not hesitate to contact **info@deltapsu.com** for more details.

CliQ II DIN Rail Power Supply

24V 91.2W 1 Phase, NEC Class 2 / DRP-24V100W1NN

Output De-rating VS. Input Voltage

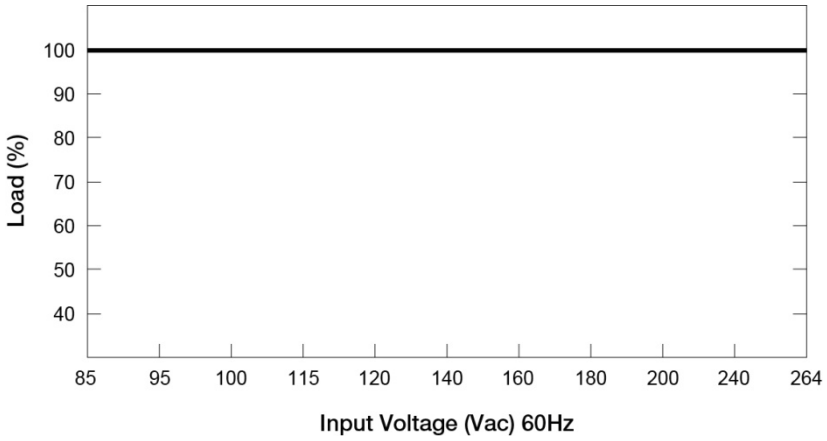

- No output power de-rating across the entire input voltage range

Assembly & Installation

The power supply unit (PSU) can be mounted on 35mm DIN rails in accordance with EN 60715. For Vertical Mounting, the device should be installed with input terminal block on the bottom. For Horizontal Mounting, the device should be installed with input terminal block on the left side.

Each device is delivered ready to install.

Mounting

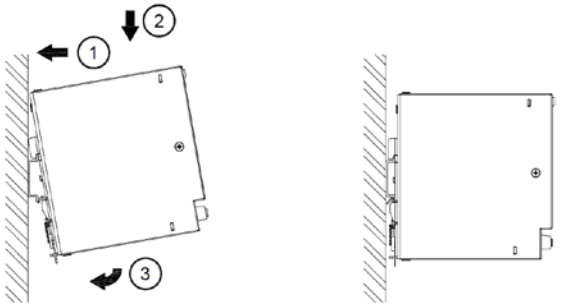

Fig. 2.1 Mounting

Snap on the DIN rail as shown in Fig. 2.1:

1. Tilt the unit upwards and insert it onto the DIN rail.
2. Push downwards until stopped.
3. Press against the bottom front side for locking.
4. Shake the unit slightly to ensure that it is secured.

Dismounting

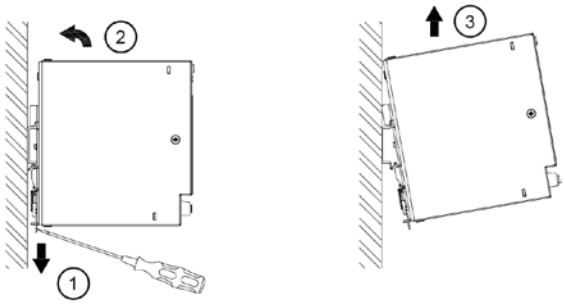

Fig. 2.2 Dismounting

To uninstall, pull or slide down the latch with screw driver as shown in Fig. 2.2. Then slide the power supply unit (PSU) in the opposite direction, release the latch and pull out the power supply unit (PSU) from the rail.

In accordance to EN 60950 / UL 50950, flexible cables require ferrules.
Use appropriate copper cables designed to sustain operating temperature of:

1. 60°C, 60°C / 75°C for USA
2. At least 75°C for ambient not exceeding 60°C, and 90°C for ambient exceeding 60°C for Canada.

CliQ II DIN Rail Power Supply

24V 91.2W 1 Phase, NEC Class 2 / DRP-24V100W1NN

Safety Instructions

■ **Vertical Mounting**

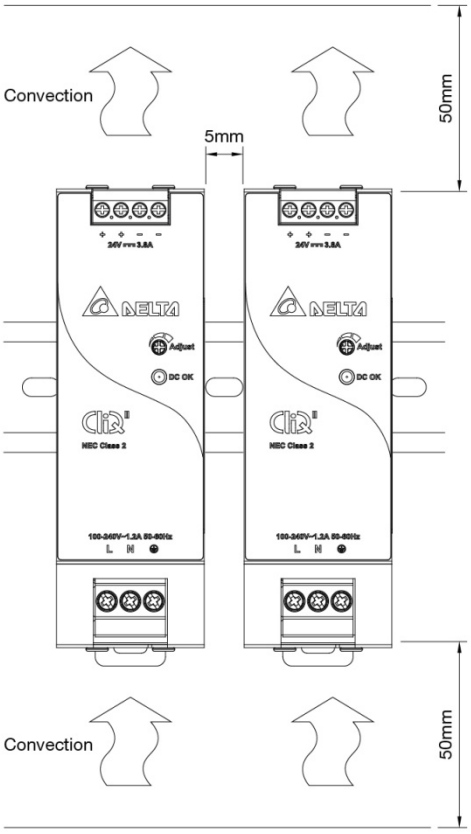

■ **Horizontal Mounting**

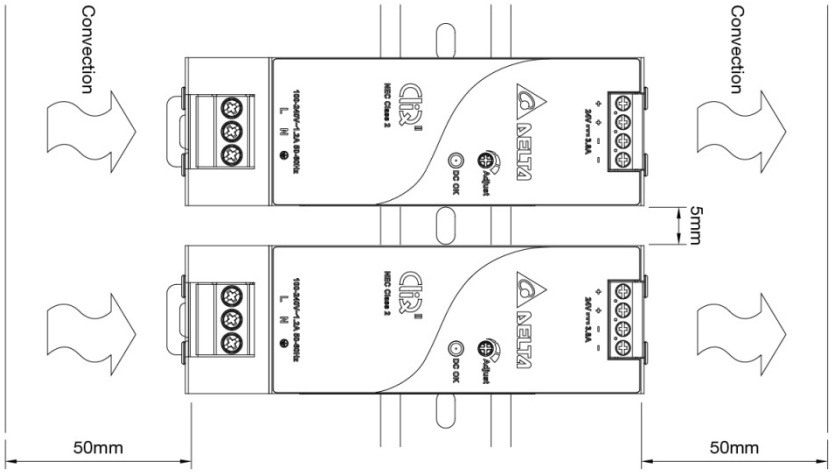

- ALWAYS switch mains of input power OFF before connecting and disconnecting the input voltage to the unit. If mains are not turned OFF, there is risk of explosion / severe damage.
- **To guarantee sufficient convection cooling, keep a distance of 50mm above and below the device as well as a lateral distance of 5mm to other units.**
- Note that the enclosure of the device can become very hot depending on the surrounding air temperature and load of the power supply. Risk of burns!
- Only plug in and unplug connectors when power is turned off!
- DO NOT insert any objects into the unit.
- Hazardous voltages may be present for up to 5 minutes after the input mains voltage is disconnected. Do not touch the unit during this time.
- The power supplies are built in units and must be installed in a cabinet or room (condensation free environment and indoor location) that is relatively free of conductive contaminants.
- CAUTION: “For use in a controlled environment”.

CliQ II DIN Rail Power Supply

24V 91.2W 1 Phase, NEC Class 2 / DRP-24V100W1NN

Functions

■ **Graph illustrating the Start-up Time, Rise Time, and Hold-up Time**

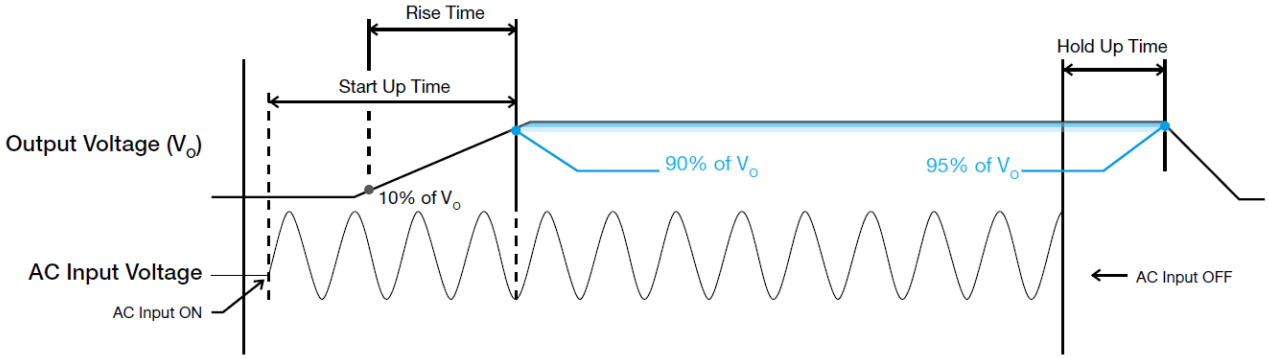

Start-up Time

The time required for the output voltage to reach 90% of its set value, after the input voltage is applied.

Rise Time

The time required for the output voltage to change from 10% to 90% of its set value.

Hold-up Time

Hold up time is the time when the AC input collapses and output voltage retains regulation for a certain period of time. The time required for the output to reach 90% of its set value, after the input voltage is removed.

Inrush Current

Inrush current is the peak, instantaneous, input current measured and, occurs when the input voltage is first applied. For AC input voltages, the maximum peak value of inrush current will occur during the first half cycle of the applied AC voltage. This peak value decreases exponentially during subsequent cycles of AC voltage.

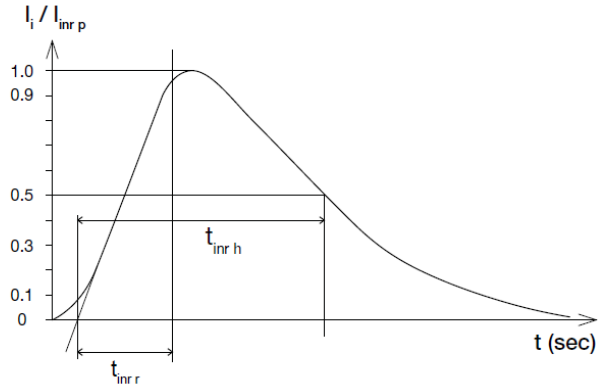

Dynamic Response

The power supply output voltage will remains within ±5% of its steady state value, when subjected to a dynamic load from 0 to 100% of its rated current.

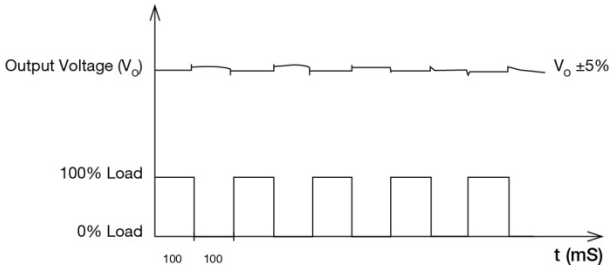

All parameters are specified at 25°C ambient unless otherwise indicated.

CliQ II DIN Rail Power Supply

24V 91.2W 1 Phase, NEC Class 2 / DRP-24V100W1NN

Overload & Overcurrent Protections

The power supply's Overcurrent (OCP) Protection will be activated when output current is 3.8A I_O (Max load) < 8A. In such occurrence, the V_O will start to droop and once the output voltage is below 12.5Vdc typ., the power supply will go into "Hiccup mode" (Auto-Recovery). The power supply will recover once the fault condition of the OCP is removed and I_O is back within the specifications.

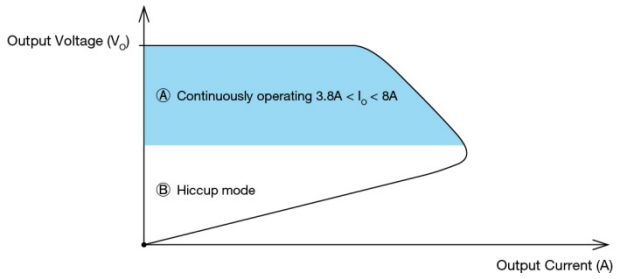

The Overload Protection (OLP) is limited at output power of less than 100W according to safety requirements.

Short Circuit Protection

The power supply's output OLP/OCP function also provides protection against short circuits. When a short circuit is applied, the output current will operate in "Hiccup mode", as shown in the illustration in the OLP/OCP section on this page. The power supply will return to normal operation after the short circuit is removed.

Overvoltage Protection

The power supply's overvoltage circuit will be activated when its internal feedback circuit fails. The output voltage shall not exceed its specifications defined on Page 3 under "Protections".

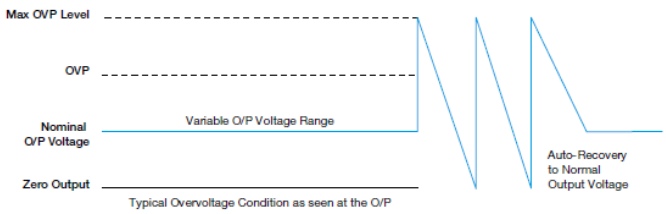

Over Temperature Protection

As mentioned above, the power supply also has Over Temperature Protection (OTP). In the event of a higher operating temperature at 100% load, the power supply will run into OTP when the operating temperature is beyond what is recommended in the de-rating graph. When activated, the output voltage will go into bouncing mode until the temperature drops to its normal operating temperature as recommended in the de-rating graph.

CliQ II DIN Rail Power Supply

24V 91.2W 1 Phase, NEC Class 2 / DRP-24V100W1NN

Operating Mode

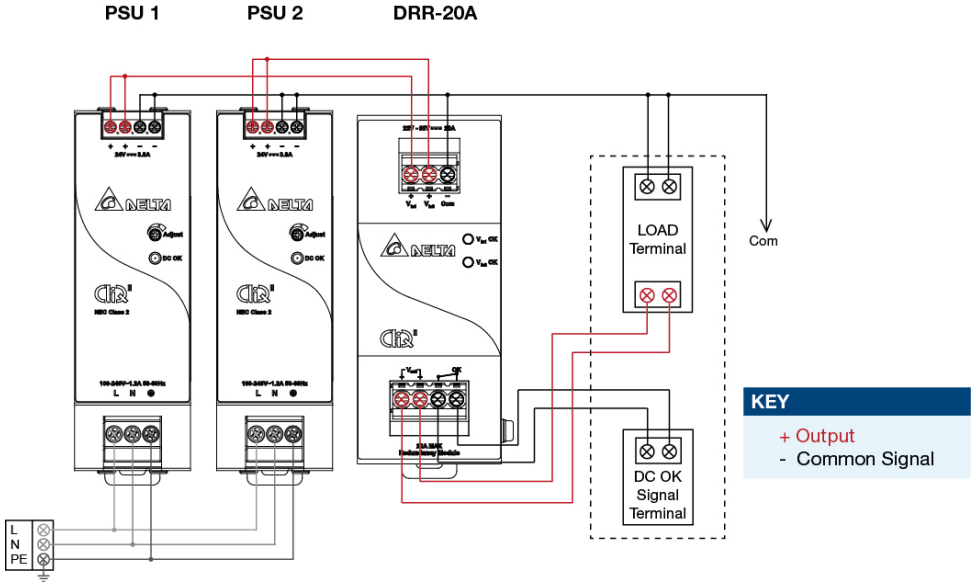

Fig. 3 Redundancy / Parallel Operation Connection Diagram

■ **Redundancy Operation**

In order to ensure proper redundancy operation for the power supply unit (PSU), ensure that the output voltage difference between the two units is kept at 0.45~0.50V for 24V supplies. Follow simple steps given below to verify:

Step 1.
Measure output voltage of PSU 1 and PSU 2. If PSU 1 is the master unit, then V_O of PSU 1 must be higher than PSU 2.

In order to set the output voltage, connect the power supply to 50% load and set the PSU 1 and PSU 2 output voltage.

Step 2.
Connect the right DRR module, 20A as per the system requirement to the power supply units PSU 1 and PSU 2 at V_{in} 1 & V_{in} 2 respectively.

Step 3.
Connect the system load from V_{out}. Please note that output voltage V_{out} from DRR module will be = V_O (output voltage of power supply) – V_{drop}* (in DRR module).

■ **Parallel Operation**

These DRR modules can also be used for Parallel function in order to increase the output power by N+1 (e.g. 2.5A + 2.5A = 5A or 2.5A + 2.5A + 2.5A = 7.5A) or current sharing, and thus increasing the power supply and system reliability. Though the DRP-24V100W1NN is not designed for current sharing, a good current sharing between two power supplies can be achieved by following simple steps as below (Refer to Fig. 3 for the Connection Diagram).

Step 1.
Set output load condition for both supplies at 50% and measure the output voltages.

Step 2.
Adjust output voltages to the same level or within ±25mV difference.

Step 3.
Connect PSU 1 and PSU 2 with the DRR-20A module and measure at V_{in} 1 & V_{in} 2 to verify the voltage difference. Ensure the voltages are within ±25mV.

Step 4.
Output voltage from DRR module V_{out} will be = V_O (output voltage of power supply) – V_{drop}* (in DRR module).

*V_{drop} will vary from 0.60V to 0.90V (Typical 0.65V) depending on the load current and surrounding air temperature.

CliQ II DIN Rail Power Supply

24V 91.2W 1 Phase, NEC Class 2 / DRP-24V100W1NN

Others

Delta RoHS Compliant

Restriction of the usage of hazardous substances

The European directive 2011/65/EU limits the maximum impurity level of homogeneous materials such as lead, mercury, cadmium, chrome, polybrominated flame retardants PBB and PBDE for the use in electrical and electronic equipment. RoHS is the abbreviation for “Restriction of the use of certain hazardous substances in electrical and electronic equipment”.

This product conforms to this standard.

Conformal Coating

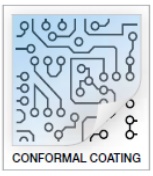

The Protective Coating Technology

Delta Electronics Group has designed the perfect dipping technique which penetrates everywhere including under device, and prevents leakage. The conformal coating dipping can be applied to PCBs or circuit board. The coating preserves the performance of precision electronic primarily by preventing ionizable contaminants such as salt from reaching circuit nodes, where the material slumps around sharp edges. This can be a problem especially in highly conversing atmosphere.

PFC – Norm EN 61000-3-2



Line Current Harmonic content

Typically, the input current waveform is not sinusodial due to the periodical peak charging of the input capacitor. In industrial environment, complying with EN 61000-3-2 is only necessary under special conditions. Complying to this standard can have some technical drawbacks, such as lower efficiency as well as some commercial aspects such as higher purchasing costs. Frequently, the user does not profit from fulfilling this standard, therefore, it is important to know whether it is mandatory to meet this standard for a specific application.