CliQ II DIN Rail Power Supply

24V 120W 3 Phase / DRP024V120W3B☐



Highlights & Features

- Universal AC input voltage: 3 x 320Vac – 600Vac (3-Phase) or 2 x 360Vac – 600Vac (2-Phase)
- Power will not de-rate for the entire input voltage range
- Power Boost of 150% for 5 seconds
- Full corrosion resistant aluminium chassis
- Conformal coating on PCBA to protect against chemical and dust pollutants
- Hazardous Locations approval to ATEX and Class I, Div 2 (DRP024V120W3BA)

Safety Standards

CB Certified for worldwide use

Model Number: DRP024V120W3B☐
Unit Weight: 0.66 kg
Dimensions (L x W x D): 121 x 50 x 117.3 mm

General Description

The CliQ II 3-phase DIN rail power supply series offers output voltage of 24V. These products are encased in rugged yet lightweight full aluminium body that can withstand shock and vibration according to IEC 60068-2 standard. The series of 3-phase products can operate over a wide temperature range of -25°C to +80°C. These products also feature universal AC input voltage range for 3-phase from 320Vac to 600Vac or 2-phase from 360Vac to 600Vac, and the power will not de-rate throughout the entire range. Another great feature is the conformal coating on the PCBA which allows selected models to be certified to ATEX and Class I, Div 2 for use in hazardous locations. The design conforms to harmonic current emission IEC/EN 61000-3-2, Class A.

Model Information

CliQ II DIN Rail Power Supply

Model Number	Input Voltage Range	Output Voltage	Output Current
DRP024V120W3B☐	3 x 320-600Vac (3-Phase) or 2 x 360-600Vac (2-Phase)	24Vdc	5.00A

Model Numbering

DR	P	24V	120W	3	B	☐
DIN Rail	Power Supply	Output Voltage	Output Power	Three Phase	CliQ II Series	A - Metal Case, with Class I, Div 2 N - Metal Case, without Class I, Div 2

All parameters are specified at 25°C ambient unless otherwise indicated.
www.DeltaPSU.com (May 2014, Rev. 02)

CliQ II DIN Rail Power Supply
24V 120W 3 Phase / DRP024V120W3B□

Specifications

Input Ratings / Characteristics

Nominal Input Voltage	3 x 400-500Vac
Input Voltage Range*	3 x 320-600Vac (3-Phase) or 2 x 360-600Vac (2-Phase)
Nominal Input Frequency	50-60Hz
Input Frequency Range	47-63Hz
DC Input Voltage Range**	450-800Vdc
Input Current	< 0.50A @ 3 x 400Vac, < 0.40A @ 3 x 500Vac
Efficiency at 100% Load	> 88.0% @ 3 x 400Vac & 3 x 500Vac
Max Inrush Current (Cold Start)	< 30A @ 3 x 400Vac & 3 x 500Vac
Leakage Current	< 3.5mA @ 500Vac

*Fulfills test conditions for up to 600Vac input voltage.
**Fulfills the test conditions for this range.

Output Ratings / Characteristics

Nominal Output Voltage	24Vdc
Output Voltage Tolerance	± 2% (initial set point tolerance from factory)
Output Voltage Adjustment Range	24-28Vdc
Output Current	5.00A (continuously operating at 24V) 7.50A (Power Boost for 5 seconds at 24V, refer to the details in the Functions section)
Output Power	120W (continuously operating at 24V) 180W (Power Boost for 5 seconds at 24V, refer to the details in the Functions section)
Line Regulation	< 0.5% typ. (@ 320-600Vac input, 100% load)
Load Regulation	< 1% typ. (@ 320-600Vac input, 0-100% load)
PARD (20MHz)	< 150mVpp
Rise Time	< 100ms @ nominal input (100% load)
Start-up Time	< 1,000ms @ nominal input (100% load)
Hold-up Time	> 20ms @ 3 x 400Vac, > 40ms @ 3 x 500Vac (100% load)
Dynamic Response (Overshoot & Undershoot O/P Voltage)	± 5% @ 0-100% load
Start-up with Capacitive Loads	10,000µF Max

CliQ II DIN Rail Power Supply

24V 120W 3 Phase / DRP024V120W3B□

Mechanical

Case Cover / Chassis		Aluminium
Dimensions (L x W x D)		121 x 50 x 117.3 mm
Unit Weight		0.66 kg
Indicator		Green LED (DC OK)
Cooling System		Convection
Terminal	Input	4 Pins (Rated 600V/35A)
	Output	4 Pins (Rated 300V/28A)
Wire	Input / Output	AWG 18-12
Mounting Rail		Standard TS35 DIN Rail in accordance with EN 60715
Noise (1 Meter from power supply)		Sound Pressure Level (SPL) < 40dBA

Environment

Surrounding Air Temperature	Operating	-25°C to +80°C (Cold Start at -40°C)
	Storage	-40°C to +85°C
Power De-rating	Vertical Mounting	> 50°C de-rate power by 2.5% / °C, > 70°C de-rate power by 5% / °C
	Horizontal Mounting	> 40°C de-rate power by 2.5% / °C, > 60°C de-rate power by 5% / °C
Operating Humidity		5 to 95% RH (Non-Condensing)
Operating Altitude		0 to 2,500 Meters for ITE application (@ 50°C) 0 to 2,000 Meters for Industrial application (@ 50°C)
Shock Test (Non-Operating)		IEC 60068-2-27, 30G (300m/S²) for a duration of 18ms, 1 times per direction, 2 times in total
Vibration (Non-Operating)		IEC 60068-2-6, 10Hz to 500Hz @ 30m/S² (3G peak); 60 min per axis for all X, Y, Z direction
Pollution Degree		2

Protections

Overvoltage	32V ±10%, SELV Output, Hiccup Mode, Non-Latching (Auto-Recovery)
Overload / Overcurrent	> 150% of rated load current, Hiccup Mode, Non-Latching (Auto-Recovery)
Over Temperature	< 80°C Surrounding Air Temperature @ 100% load, Non-Latching (Auto-Recovery)
Short Circuit	Hiccup Mode, Non-Latching (Auto-Recovery when the fault is removed)
Degree of Protection	IP20
Protection Against Shock	Class I with PE* connection

*PE: Primary Earth

All parameters are specified at 25°C ambient unless otherwise indicated.

CliQ II DIN Rail Power Supply
24V 120W 3 Phase / DRP024V120W3B□

Reliability Data

MTBF	> 800,000 hrs. as per Telcordia SR-332 I/P: 3 x 400Vac, O/P: 100% load, Ta: 25°C
Expected Cap Life Time	10 years (3 x 400Vac & 3 x 500Vac, 50% load @ 40°C)

Safety Standards / Directives

Electrical Equipment in Power Installations		EN 50178 / IEC 62103
Electrical Safety		SIQ to EN 60950-1, UL/cUL recognized to UL 60950-1 and CSA C22.2 No. 60950-1, CB scheme to IEC 60950-1
Industrial Control Equipment		UL/cUL listed to UL 508 and CSA C22.2 No. 107.1-01, CSA to CSA C22.2 No. 107.1-01 (File No. 181564)
Hazardous Location / ATEX (For DRP024V120W3BA)		cCSAus to CSA C22.2 No. 213-M1987, ANSI / ISA 12.12.01:2007 [Class I, Division 2, Group A, B, C, D T4, Ta = -25°C to +80°C for Vertical (> +50°C derating) and -25°C to +70°C for Horizontal (> +40°C derating)] EN 60079-0:2012, EN 60079-15:2010 [Ex II 3G Ex nA IIC T4 Gc, Ta= -25°C to +80°C for Vertical (> +50°C derating) and -25°C to +70°C for Horizontal (> +40°C derating)]
Ex II 3G ATEX 94/9/EC (For DRP024V120W3BA)		Certificate No. EPS 13 ATEX 1 575 X
CE		In conformance with EMC Directive 2004/108/EC and Low Voltage Directive 2006/95/EC For DRP024V120W3BA: In conformance with Equipment for explosive atmospheres (ATEX) directive 94/9/EC
Material and Parts		RoHS Directive 2011/65/EU Compliant
Galvanic Isolation	Input to Output	4.0KVac
	Input to Ground	2.0KVac
	Output to Ground	1.5KVac

CliQ II DIN Rail Power Supply
24V 120W 3 Phase / DRP024V120W3B□

EMC

EMC / Emissions		CISPR 22, EN 55022, CISPR 11, EN 55011, FCC Title 47: Class B
Component Power Supply for General Use		EN 61204-3
Immunity to		EN 55024, EN 61000-6-2
Electrostatic Discharge	IEC 61000-4-2	Level 4 Criteria A[1)] Air Discharge: 15kV Contact Discharge: 8kV
Radiated Field	IEC 61000-4-3	Level 3 Criteria A[1)] 80MHz-1GHz, 10V/M, 80% modulation (1kHz)
Electrical Fast Transient / Burst	IEC 61000-4-4	Level 3 Criteria A[1)] 2kV
Surge	IEC 61000-4-5	Level 3 Criteria A[1)] Common Mode[2)]: 2kV Differential Mode[3)]: 1kV
Conducted	IEC 61000-4-6	Level 3 Criteria A[1)] 150kHz-80MHz, 10Vrms
Power Frequency Magnetic Fields	IEC 61000-4-8	Criteria A[1)] 10A/Meter
Voltage Dips	IEC 61000-4-11	100% dip; 1 cycle (20ms); Self Recoverable
Low Energy Pulse Test (Ring Wave)	IEC 61000-4-12	Level 3 Criteria A[1)] Common Mode[2)]: 2kV Differential Mode[3)]: 1kV
Harmonic Current Emission		IEC/EN 61000-3-2, Class A
Voltage Fluctuation and Flicker		IEC/EN 61000-3-3

1) Criteria A: Normal performance within the specification limits
2) Asymmetrical: Common mode (Line to earth)
3) Symmetrical: Differential mode (Line to line)

CliQ II DIN Rail Power Supply

24V 120W 3 Phase / DRP024V120W3B☐

Block Diagram

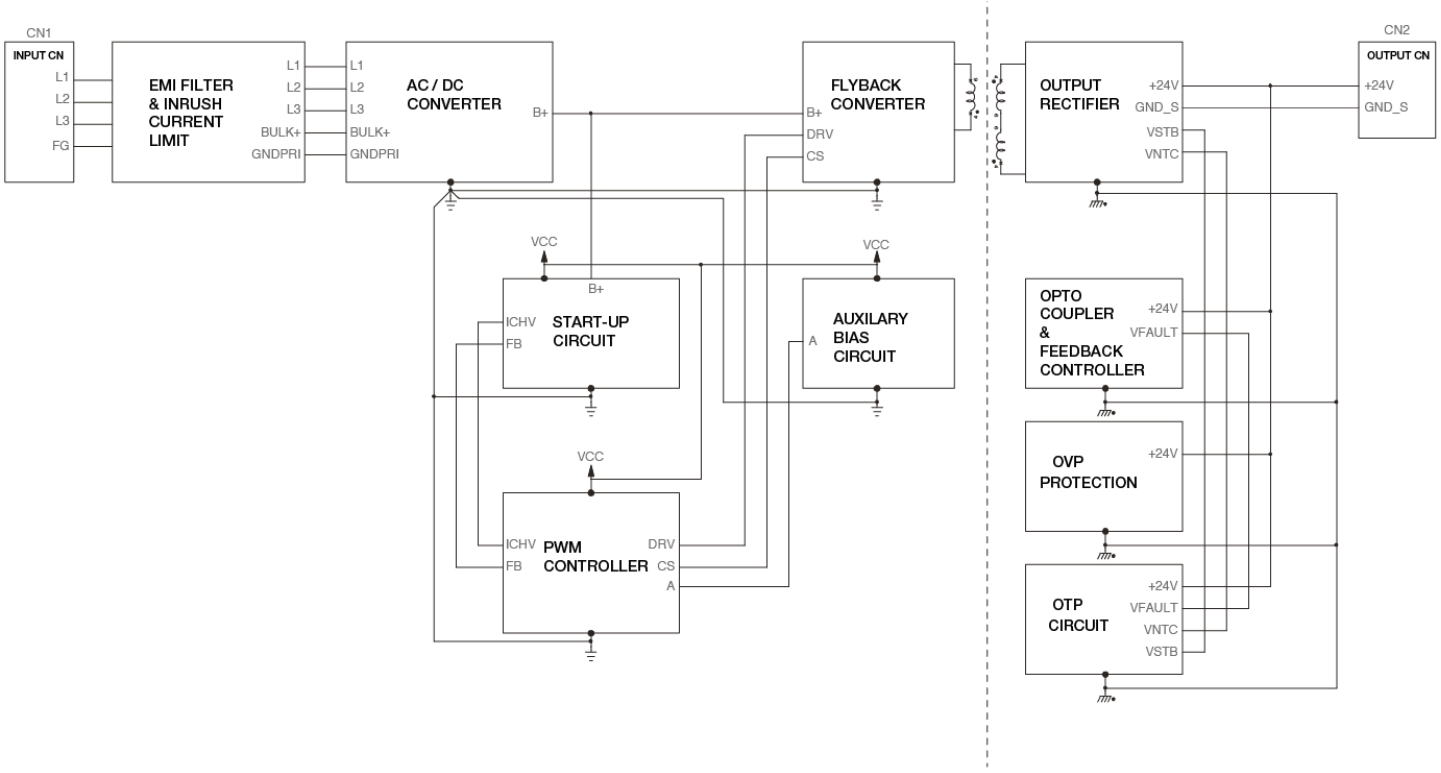

Device Description

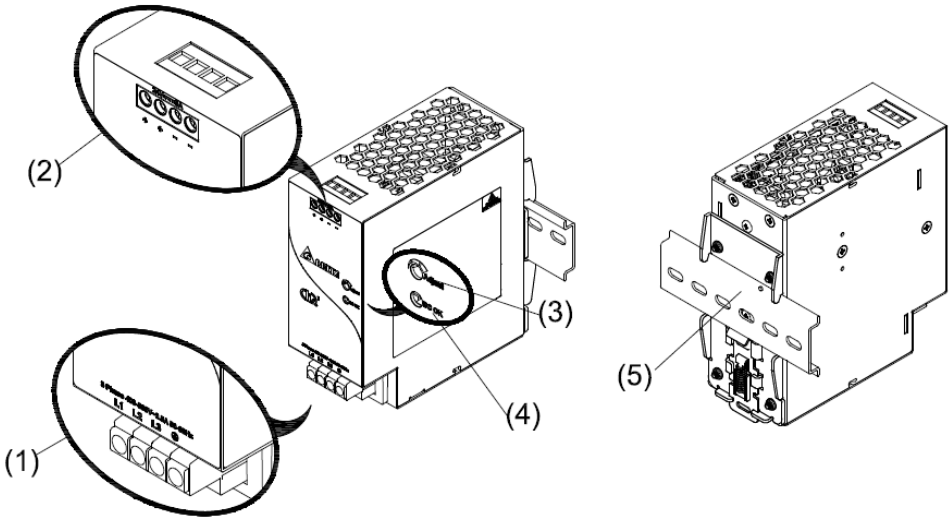

1) Input terminal block connector
2) Output terminal block connector
3) DC Voltage adjustment potentiometer
4) DC OK control LED (Green)
5) Universal mounting rail system

All parameters are specified at 25°C ambient unless otherwise indicated.
www.DeltaPSU.com (May 2014, Rev. 02)

CliQ II DIN Rail Power Supply
24V 120W 3 Phase / DRP024V120W3B☐

Dimensions

L x W x D: 121 x 50 x 117.3 mm

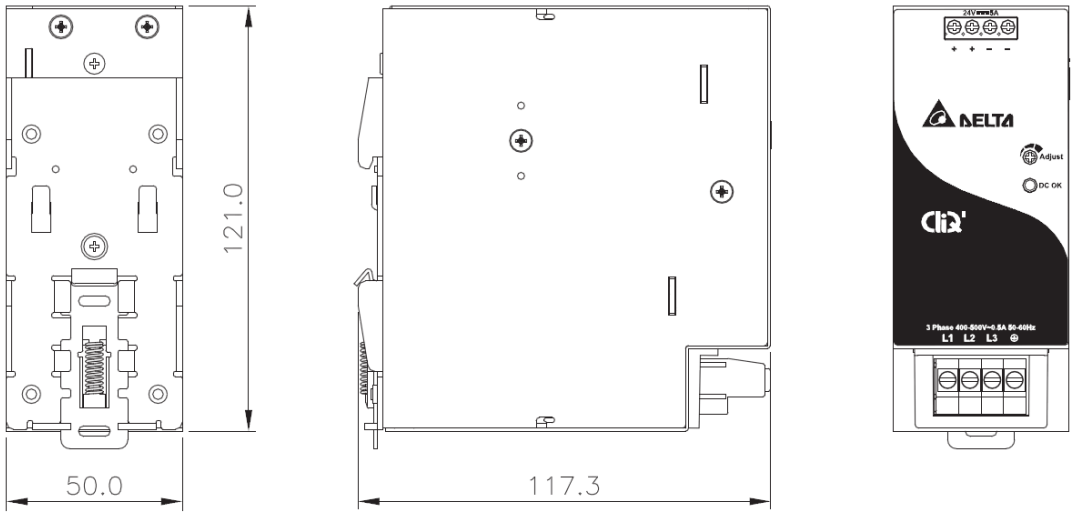

Engineering Data

De-rating

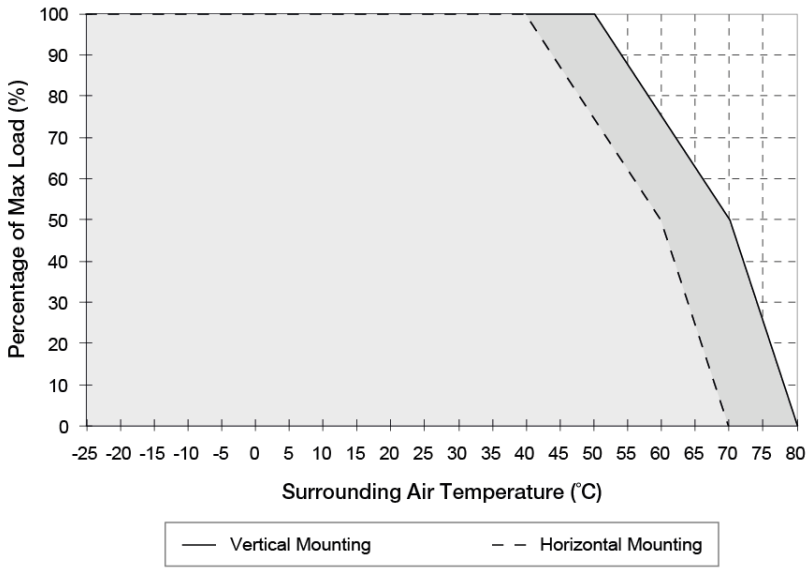

Fig. 1 **De-rating for Vertical Mounting Orientation**
> 50°C de-rate power by 2.5% / °C,
> 70°C de-rate power by 5% / °C

De-rating for Horizontal Mounting Orientation
> 40°C de-rate power by 2.5% / °C,
> 60°C de-rate power by 5% / °C

Note

1. Power supply components may degrade, or be damaged, when the power supply is continuously used outside the shaded region, refer to the graph shown in Fig. 1.
2. If the output capacity is not reduced when the surrounding air temperature >50°C (Vertical) or >40°C (Horizontal), the device may run into Over Temperature Protection. When activated, the output voltage will go into bouncing mode and will recover when the surrounding air temperature is lowered or the load is reduced as far as necessary to keep the device in working condition.
3. In order for the device to function in the manner intended, it is also necessary to keep a safety distance of 5mm with adjacent units while the device is in operation.
4. Depending on the surrounding air temperature and output load delivered by the power supply, the device can be very hot!
5. If the device has to be mounted in any other orientation, please do not hesitate to contact **info@deltapsu.com** for more details.

CliQ II DIN Rail Power Supply
24V 120W 3 Phase / DRP024V120W3B□

Output De-rating VS. Input Voltage

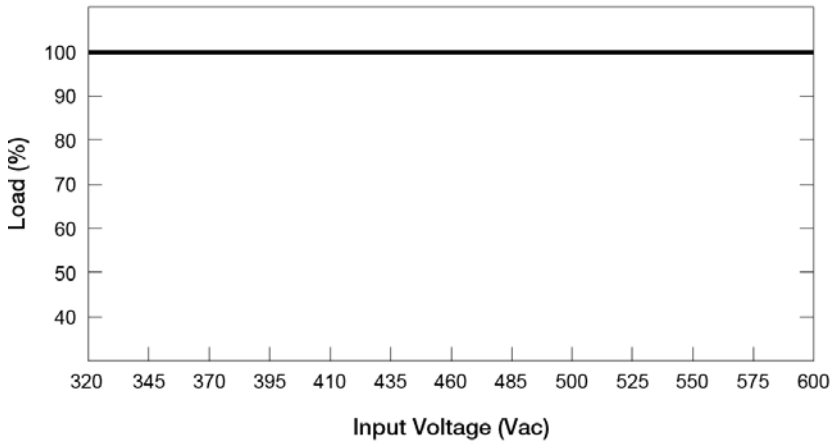

- No output power de-rating across the entire input voltage range 3 x 320-600Vac (3-Phase) or 2 x 360-600Vac (2-Phase)

Assembly & Installation

The power supply unit (PSU) can be mounted on 35mm DIN rails in accordance with EN 60715. For Vertical Mounting, the device should be installed with input terminal block at the bottom. For Horizontal Mounting, the device should be installed with input terminal block on the left side.

Each device is delivered ready to install.

Mounting

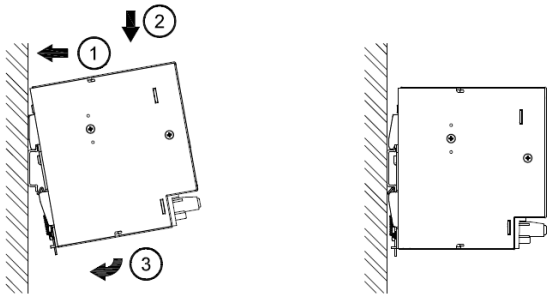

Fig. 2.1 Mounting

Snap on the DIN rail as shown in Fig. 2.1:
1. Tilt the unit upwards and insert it onto the DIN rail.
2. Push downwards until stopped.
3. Press against the bottom front side for locking.
4. Shake the unit slightly to ensure that it is secured.

Dismounting

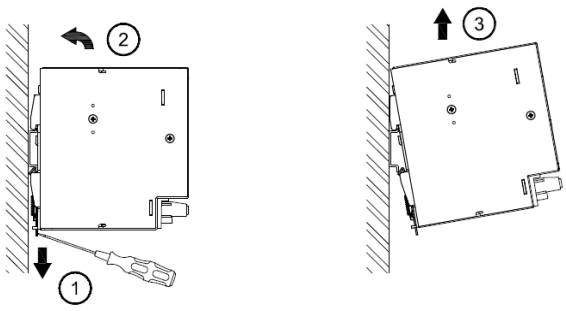

Fig. 2.2 Dismounting

To uninstall, pull or slide down the latch with screw driver as shown in Fig. 2.2. Then slide the power supply unit (PSU) in the opposite direction, release the latch and pull out the power supply unit (PSU) from the rail.

In accordance to EN 60950 / UL 50950, flexible cables require ferrules.
Use appropriate copper cables designed to sustain operating temperature of:
1. 60°C, 60°C / 75°C for USA
2. At least 75°C for ambient not exceeding 50°C, and 90°C for ambient exceeding 50°C for Canada.

CliQ II DIN Rail Power Supply
24V 120W 3 Phase / DRP024V120W3B□

Safety Instructions

■ **Vertical Mounting**

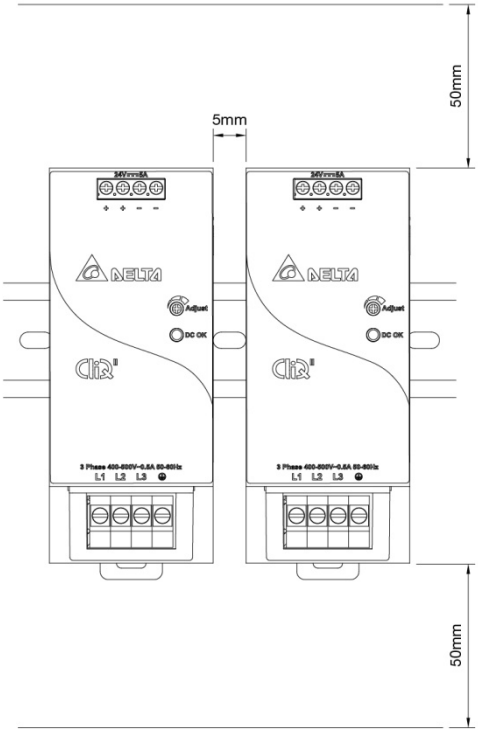

■ **Horizontal Mounting**

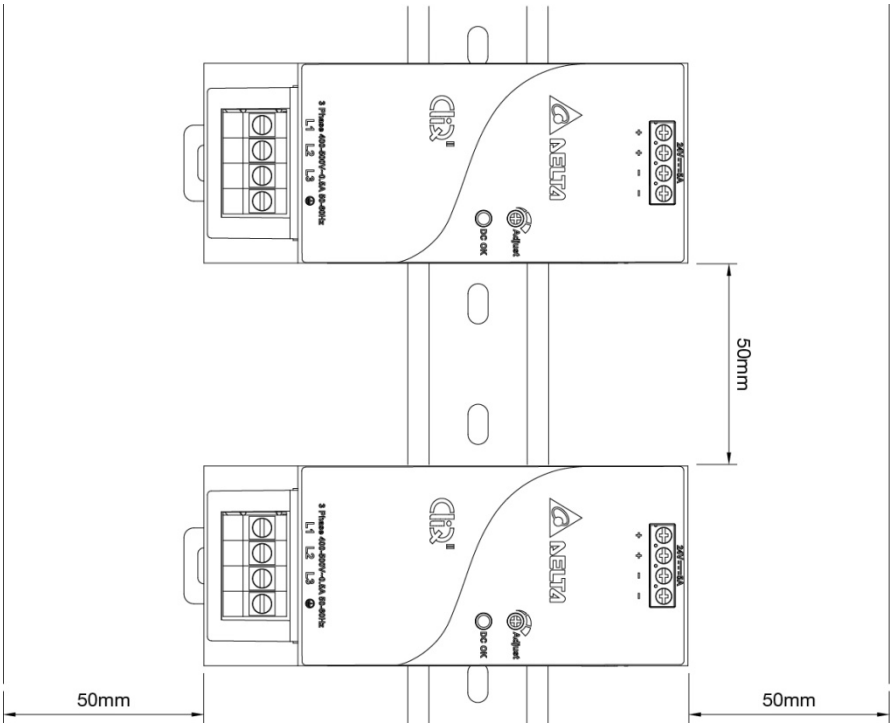

– ALWAYS switch mains of input power OFF before connecting and disconnecting the input voltage to the unit. If mains are not turned OFF, there is risk of explosion / severe damage.
– **To guarantee sufficient convection cooling, keep a distance of 50mm above and below the device as well as a lateral distance of 5mm (for Vertical Mounting) or 50mm (for Horizontal Mounting) to other units.**
– Note that the enclosure of the device can become very hot depending on the surrounding air temperature and load of the power supply. Risk of burns!
– Only plug in and unplug connectors when power is turned off!
– DO NOT insert any objects into the unit.
– Hazardous voltages may be present for up to 5 minutes after the input mains voltage is disconnected. Do not touch the unit during this time.
– The power supplies unit should be installed in minimum IP54 rated enclosure.
– The power supplies are built in units and must be installed in a cabinet or room (condensation free environment and indoor location) that is relatively free of conductive contaminants.
– CAUTION: “For use in a controlled environment”.

For DRP024V120W3BA:
– The power supplies unit must be installed in an IP54 enclosure or cabinet in the final installation. The enclosure or cabinet must comply with EN60079-0 or EN60079-15.
– Warning: Explosion Hazard - Substitution of components may impair suitability for Class I, Division 2.
– Warning: Explosion Hazard - Do not disconnect equipment or adjust potentiometer unless the power has been switched off or the area is known to be non-hazardous.

CliQ II DIN Rail Power Supply
24V 120W 3 Phase / DRP024V120W3B□

Functions

■ **Graph illustrating the Start-up Time, Rise Time, and Hold-up Time**

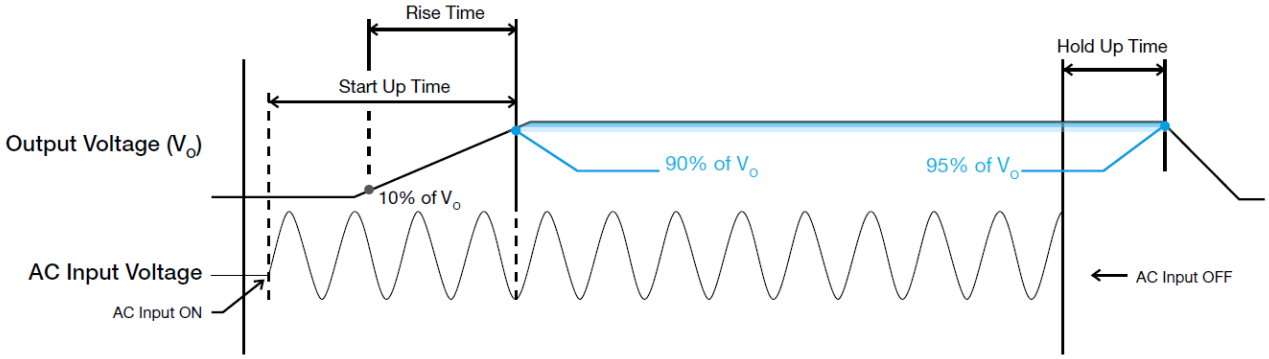

Start-up Time

The time required for the output voltage to reach 90% of its set value, after the input voltage is applied.

Rise Time

The time required for the output voltage to change from 10% to 90% of its set value.

Hold-up Time

Hold up time is the time when the AC input collapses and output voltage retains regulation for a certain period of time. The time required for the output to reach 90% of its set value, after the input voltage is removed.

Inrush Current

Inrush current is the peak, instantaneous, input current measured and, occurs when the input voltage is first applied. For AC input voltages, the maximum peak value of inrush current will occur during the first half cycle of the applied AC voltage. This peak value decreases exponentially during subsequent cycles of AC voltage.

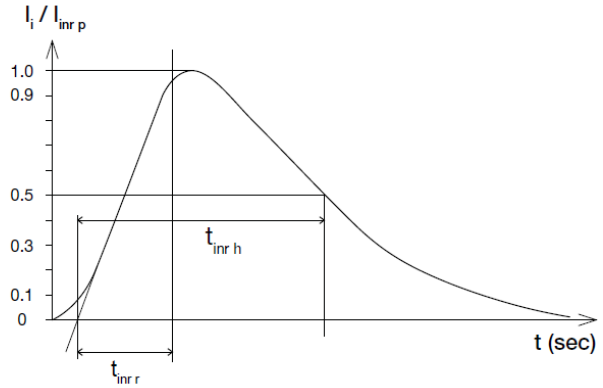

Dynamic Response

The power supply output voltage will remains within ±5% of its steady state value, when subjected to a dynamic load from 0 to 100% of its rated current.

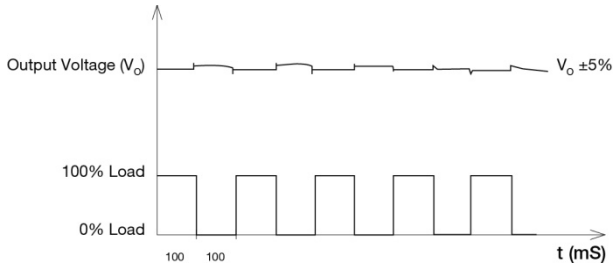

All parameters are specified at 25°C ambient unless otherwise indicated.
www.DeltaPSU.com (May 2014, Rev. 02)

CliQ II DIN Rail Power Supply
24V 120W 3 Phase / DRP024V120W3B□

Power Boost

Power Boost is the reserve power available constantly that allows reliable startup to support sudden and short spike of loads with high inrush current typically during turn on to remove the need of more expensive higher rated power supply unit. After the output has reached its steady state set value, the power supply can support surge loads with a higher short-term power demand up to 150% of maximum rated load (I_O Max), for a maximum duration of 5 seconds. The Power Boost is also available to repeatedly basis with according to the condition of an average (R.M.S) output power shall not exceed continuous operating condition or refer to duty cycle calculation below.

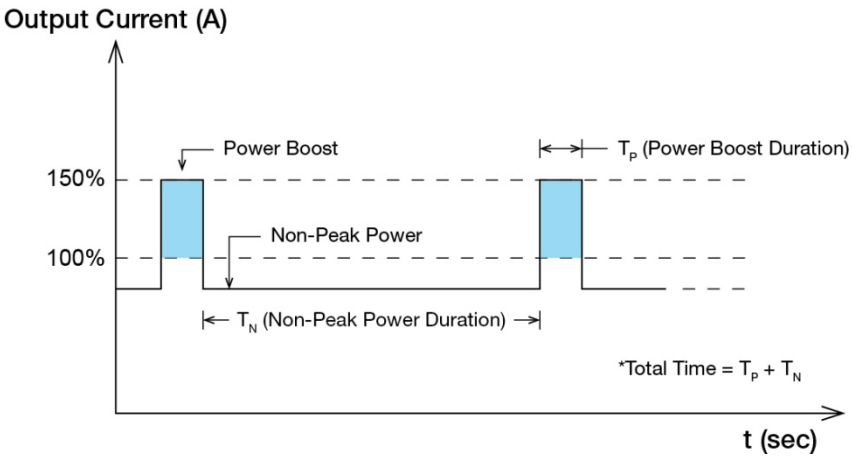

$$Duty\ cycle\ (\%) = \frac{T_P}{Total\ Time}$$

$$Average\ Output\ Power\ (P_{Avg}) = \frac{(Power\ Boost\ \times T_P) + (Non\text{-}Peak\ Power \times T_N)}{Total\ Time}$$

OR

$$Non\text{-}Peak\ Power = \frac{(P_{Avg} \times Total\ Time) - (Power\ Boost\ \times T_P)}{T_N}$$

■ **An example of Power Boost and Average Output Power**

Power Boost	Peak Power (W_P)	Power Boost Duration (T_P)	Duty Cycle	Non-Peak Power (W_N)	Non-Peak Power Duration (T_N)	Total Time (T)
150%	180	5 sec	10%	113W	45 sec	50 sec
150%	180	5 sec	35%	88W	9.3 sec	14.3 sec
120%	144	10 sec	20%	114W	40 sec	50 sec
120%	144	10 sec	35%	107W	18.5 sec	28.5 sec

It is not recommended to prolong the duration of Power Boost to be longer than the specified duty cycle calculation, this may cause damage to the PSU.

CliQ II DIN Rail Power Supply
24V 120W 3 Phase / DRP024V120W3B□

Overload & Overcurrent Protections

The power supply's Overload (OLP) and Overcurrent (OCP) Protections will be activated when output current exceeds 150% of I_O (Max load). In such occurrence, the V_O will start to droop and once the power supply has reached its maximum power limit, the protection is activated and the power supply will go into "Hiccup mode" (Auto-Recovery). The power supply will recover once the fault condition of the OLP and OCP is removed and I_O is back within the specifications.

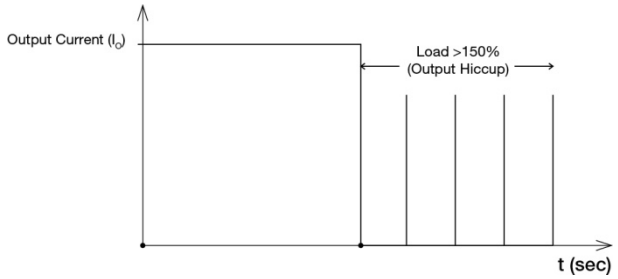

It is not recommended to prolong the duration of I_O when it is <150% but >100%, since it may cause damage to the PSU.

Short Circuit Protection

The power supply's output OLP/OCP function also provides protection against short circuits. When a short circuit is applied, the output current will operate in "Hiccup mode", as shown in the illustration in the OLP/OCP section on this page. The power supply will return to normal operation after the short circuit is removed.

Overvoltage Protection

The power supply's overvoltage circuit will be activated when its internal feedback circuit fails. The output voltage shall not exceed its specifications defined on Page 3 under "Protections".

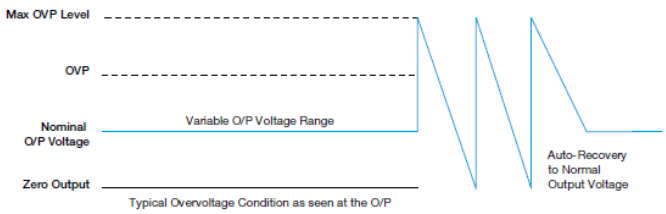

Over Temperature Protection

As mentioned above, the power supply also has Over Temperature Protection (OTP). In the event of a higher operating temperature at 100% load, the power supply will run into OTP when the operating temperature is beyond what is recommended in the de-rating graph. When activated, the output voltage will go into bouncing mode until the temperature drops to its normal operating temperature as recommended in the de-rating graph.

CliQ II DIN Rail Power Supply
24V 120W 3 Phase / DRP024V120W3B☐

Operating Mode

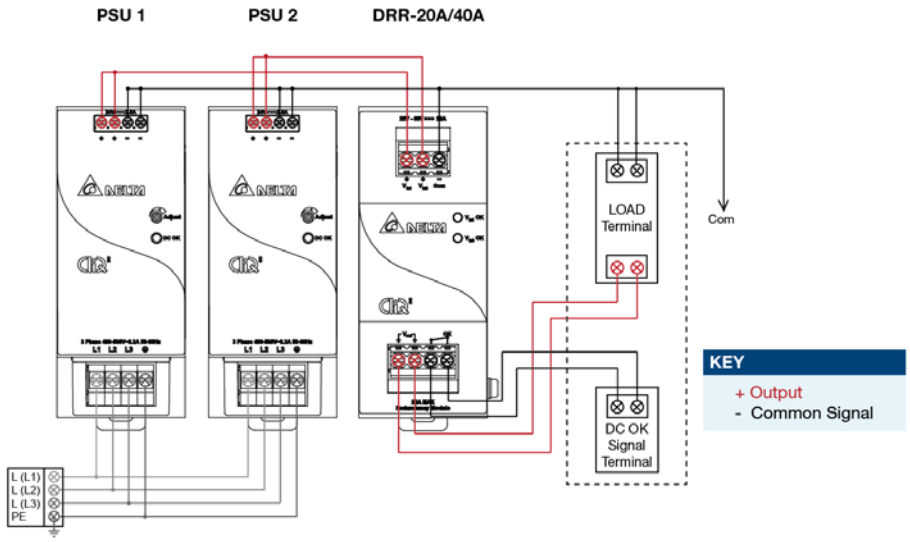

Fig. 3 Redundancy / Parallel Operation Connection Diagram

■ **Redundancy Operation**

In order to ensure proper redundancy operation for the power supply unit (PSU), ensure that the output voltage difference between the two units is kept at 0.45~0.50V for 24V supplies. Follow simple steps given below to verify:

Step 1.
Measure output voltage of PSU 1 and PSU 2. If PSU 1 is the master unit, then V_O of PSU 1 must be higher than PSU 2.

In order to set the output voltage, connect the power supply to 50% load and set the PSU 1 and PSU 2 output voltage.

Step 2.
Connect the right DRR module, 20A as per the system requirement to the power supply units PSU 1 and PSU 2 at V_{in} 1 & V_{in} 2 respectively.

Step 3.
Connect the system load from V_{out}. Please note that output voltage V_{out} from DRR module will be = V_O (output voltage of power supply) – V_{drop}* (in DRR module).

■ **Parallel Operation**

These DRR modules can also be used for Parallel function in order to increase the output power by N+1 (e.g. 2.5A + 2.5A = 5A or 2.5A + 2.5A + 2.5A = 7.5A) or current sharing, and thus increasing the power supply and system reliability. Though the DRP024V120W3B☐ is not designed for current sharing, a good current sharing between two power supplies can be achieved by following simple steps as below (Refer to Fig. 3 for the Connection Diagram).

Step 1.
Set output load condition for both supplies at 50% and measure the output voltages.

Step 2.
Adjust output voltages to the same level or within ±25mV difference.

Step 3.
Connect PSU 1 and PSU 2 with the DRR-20A module and measure at V_{in} 1 & V_{in} 2 to verify the voltage difference. Ensure the voltages are within ±25mV.

Step 4.
Output voltage from DRR module V_{out} will be = V_O (output voltage of power supply) – V_{drop}* (in DRR module).

*V_{drop} will vary from 0.60V to 0.90V (Typical 0.65V) depending on the load current and surrounding air temperature.

CliQ II DIN Rail Power Supply
24V 120W 3 Phase / DRP024V120W3B□

Others

Delta RoHS Compliant

Restriction of the usage of hazardous substances

The European directive 2011/65/EU limits the maximum impurity level of homogeneous materials such as lead, mercury, cadmium, chrome, polybrominated flame retardants PBB and PBDE for the use in electrical and electronic equipment. RoHS is the abbreviation for “Restriction of the use of certain hazardous substances in electrical and electronic equipment”.

This product conforms to this standard.

Conformal Coating

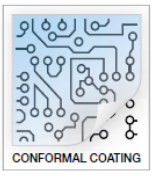

The Protective Coating Technology

Delta Electronics Group has designed the perfect dipping technique which penetrates everywhere including under device, and prevents leakage. The conformal coating dipping can be applied to PCBAs or circuit board. The coating preserves the performance of precision electronic primarily by preventing ionizable contaminants such as salt from reaching circuit nodes, where the material slumps around sharp edges. This can be a problem especially in highly conversing atmosphere.