PMF Panel Mount Power Supply

24V 240W 1 Phase / PMF-24V240WC☐☐



PMF

Highlights & Features

- Universal AC input voltage
- Built-in Active PFC and fan speed control
- Full Aluminium casing for light weight and corrosion resistant handling
- Conforms to harmonic current IEC/EN 61000-3-2, Class A and Class D
- Remote ON/OFF is available as an option
- Cold start -20°C at 100% load (240W)
- Low leakage current < 0.6mA @ 240Vac
- High MTBF > 700,000 hrs. as per Telcordia SR-332
- Short Circuit / Overvoltage / Overcurrent / Over Temperature Protections

Safety Standards

CB Certified for worldwide use

Model Number: PMF-24V240WC☐☐
Unit Weight: 0.66 kg
Dimensions (L x W x D): 190 x 93 x 50 mm

General Description

The PMF Panel Mount Power Supply series currently offers nominal output voltages of 24V. These power supply units come with universal AC input from 85Vac to 264Vac and wide operating temperature of -10°C to +70°C. The built-in active PFC provides high power factor and conforms to harmonic current IEC/EN 61000-3-2, Class A and Class D. This versatile series has two different connector options (Front Face and Terminal Block) to satisfy different application needs. Remote ON/OFF function is also available for the PMF series. All PMF power supplies conform to major international safety standards including IEC/EN/UL 60950-1 standards and are fully compliant with RoHS Directive 2011/65/EU for environmental protection.

Model Information

PMF Panel Mount Power Supply

Model Number	Input Voltage Range	Output Voltage	Output Current
PMF-24V240WC☐☐	85-264Vac	24Vdc	10.0A

Model Numbering

						CC Code
PM	**F –**	**24V**	**240W**	**C**	**☐**	**☐**
Panel Mount	Product Series F – PFC Series	Output Voltage	Output Power	Package Type C – Enclosed	Connector Type G – Front Face A – Terminal Block*	Variable B – No Remote ON/OFF R – With Remote ON/OFF*

*Options

All parameters are specified at 25°C ambient unless otherwise indicated.
www.DeltaPSU.com (November 2013, Rev. 00)

PMF Panel Mount Power Supply

24V 240W 1 Phase / PMF-24V240WC□□

Specifications

Input Ratings / Characteristics

Nominal Input Voltage	100-240Vac
Input Voltage Range	85-264Vac
Nominal Input Frequency	50-60Hz
Input Frequency Range	47-63Hz
Input Current	< 3.60A @ 115Vac, < 1.80A @ 230Vac
Efficiency at 100% Load	87.0% typ. @ 230Vac
Max Inrush Current	< 35A @ 115Vac, < 60A @ 230Vac
Power Factor	> 0.99 typ. @ 115Vac, > 0.95 typ. @ 230Vac
Leakage Current	< 0.6mA @ 240Vac

Output Ratings / Characteristics

Nominal Output Voltage		24Vdc
Output Voltage Tolerance		± 1% (initial set point tolerance from factory)
Output Voltage Adjustment Range		21.6-26.4Vdc
Output Current		10.0A
Output Power		240W
Line Regulation		± 0.5% typ. (@ 115Vac & 230Vac)
Load Regulation		± 0.5% typ. (@ 115Vac & 230Vac)
PARD (20MHz)		< 150mVpp @ 25°C < 300mVpp @ -10°C
Rise Time		50ms typ. @ 115Vac & 230Vac (100% load)
Start-up Time		1200ms typ. @ 115Vac & 230Vac (100% load)
Hold-up Time		20ms typ. @ 115Vac & 230Vac
Dynamic Response (Overshoot & Undershoot O/P Voltage)		± 5% (2.4V pk-pk) @ 115Vac & 230Vac (0-100% load)
Start-up with Capacitive Loads		8,000µF Max
Remote ON/OFF Function (Option)	CN102	Output ON: 5-12.5V Output OFF: 0-0.5V (For more information, please refer to the details in the Functional Manual section on Page 10)

Mechanical

Case Chassis		Aluminium
Case Cover		Aluminium
Dimensions (L x W x D)		190 x 93 x 50 mm
Unit Weight		0.66 kg
Indicator		Green LED (DC OK)
Cooling System		Forced Cooling
Terminal	PMF-24V240WCG□	M3.5 x 7 Pins (Rated 300V/20A)
	PMF-24V240WCA□	M3.5 x 7 Pins (Rated 300V/15A)
Wire		AWG 20-12

PMF Panel Mount Power Supply

24V 240W 1 Phase / PMF-24V240WC□□

Environment

Surrounding Air Temperature	Operating	-10°C to +70°C (Cold start at -20°C)
	Storage	-25°C to +85°C
Power De-rating		> 50°C de-rate power by 2.5% / °C < 100Vac de-rate power by 1.33% / 1V
Operating Humidity		10-95% RH (Non-Condensing)
Operating Altitude		0 to 5,000 Meters
Shock Test (Non-Operating)		IEC 60068-2-27, Half Sine: 50G for a duration of 11ms, 3 shocks for each 3 directions
Vibration (Non-Operating)		IEC 60068-2-6, Random: 5Hz to 500Hz (2.09Grms); 20 min per axis for all X, Y, Z direction
Pollution Degree		2

Protections

Overvoltage	27.6-32.4V, Latch Mode (AC power is recycled)
Overload / Overcurrent	105-150%, Hicc-up Mode, Non-Latching (Auto-Recovery)
Over Temperature	Hicc-up Mode, Non-Latching (Auto-Recovery when the fault is removed)
Short Circuit	Hicc-up Mode, Non-Latching (Auto-Recovery when the fault is removed)
Protection Against Shock	Class I with PE* connection

*PE: Primary Earth

Reliability Data

MTBF	> 700,000 hrs. as per Telcordia SR-332 I/P: 100Vac, O/P: 100% load, Ta: 35°C
Expected Cap Life Time	10 years (115Vac & 230Vac, 50% load @ 40°C)

Safety Standards / Directives

Electrical Safety		TUV Bauart to EN 60950-1, UL/cUL recognized to UL 60950-1 and CSA C22.2 No. 60950-1, CB scheme to IEC 60950-1, CCC to GB4943
CE		In conformance with EMC Directive 2004/108/EC and Low Voltage Directive 2006/95/EC
Material and Parts		RoHS Directive 2011/65/EU Compliant
Galvanic Isolation	Input to Output	3.0KVac
	Input to Ground	2.0KVac
	Output to Ground	0.5KVac

PMF Panel Mount Power Supply

24V 240W 1 Phase / PMF-24V240WC□□

EMC

EMC / Emissions		CISPR 22, EN 55022, FCC Title 47: Class B
Immunity to		
Electrostatic Discharge	IEC 61000-4-2	Level 4 Criteria A[1)] Air Discharge: 15kV Contact Discharge: 8kV
Radiated Field	IEC 61000-4-3	Level 3 Criteria A[1)] 80MHz-1GHz, 10V/M with 1kHz tone / 80% modulation
Electrical Fast Transient / Burst	IEC 61000-4-4	Level 3 Criteria A[1)] 2kV
Surge	IEC 61000-4-5	Level 3 Criteria A[1)] Common Mode[2)]: 2kV Differential Mode[3)]: 1kV
Conducted	IEC 61000-4-6	Level 3 Criteria A[1)] 150kHz-80MHz, 10Vrms
Power Frequency Magnetic Fields	IEC 61000-4-8	Criteria A[1)] 10A/Meter
Voltage Dips	IEC 61000-4-11	100% dip; 1 cycle (20ms); Self Recoverable
Low Energy Pulse Test (Ring Wave)	IEC61000-4-12	Level 3 Criteria A[1)] Common Mode[2)]: 2kV Differential Mode[3)]: 1kV
Harmonic Current Emission		IEC/EN 61000-3-2, Class A and Class D
Voltage Fluctuation and Flicker		IEC/EN 61000-3-3

1) Criteria A: Normal performance within the specification limits
2) Asymmetrical: Common mode (Line to earth)
3) Symmetrical: Differential mode (Line to line)

PMF Panel Mount Power Supply

24V 240W 1 Phase / PMF-24V240WC☐☐

Block Diagram

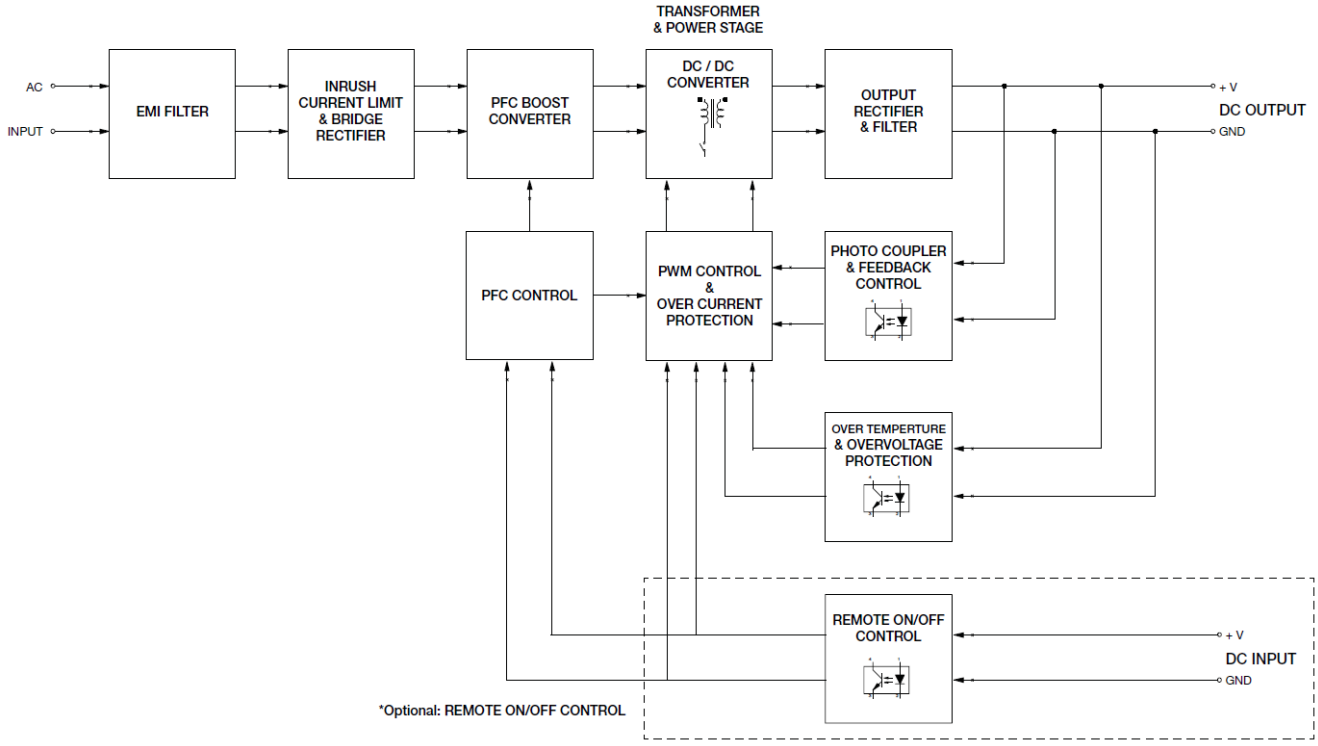

Device Description

PMF-24V240WCG☐: Front Face	**PMF-24V240WCA☐:** Terminal Block
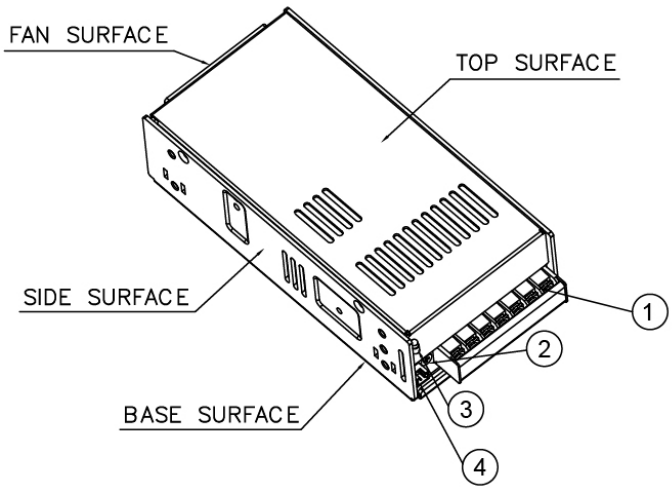	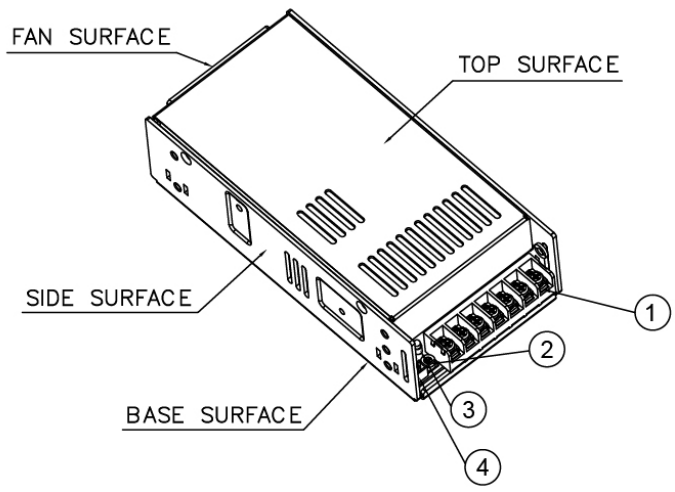

1) Input & Output terminal block connector
2) DC voltage adjustment potentiometer
3) DC OK control LED (Green)
4) Remote ON/OFF function connector (Option)

All parameters are specified at 25°C ambient unless otherwise indicated.
www.DeltaPSU.com (November 2013, Rev. 00)

PMF Panel Mount Power Supply

24V 240W 1 Phase / PMF-24V240WC□□

Dimensions

L x W x D: 190 x 93 x 50 mm (PMF-24V240WCG□: Front Face)

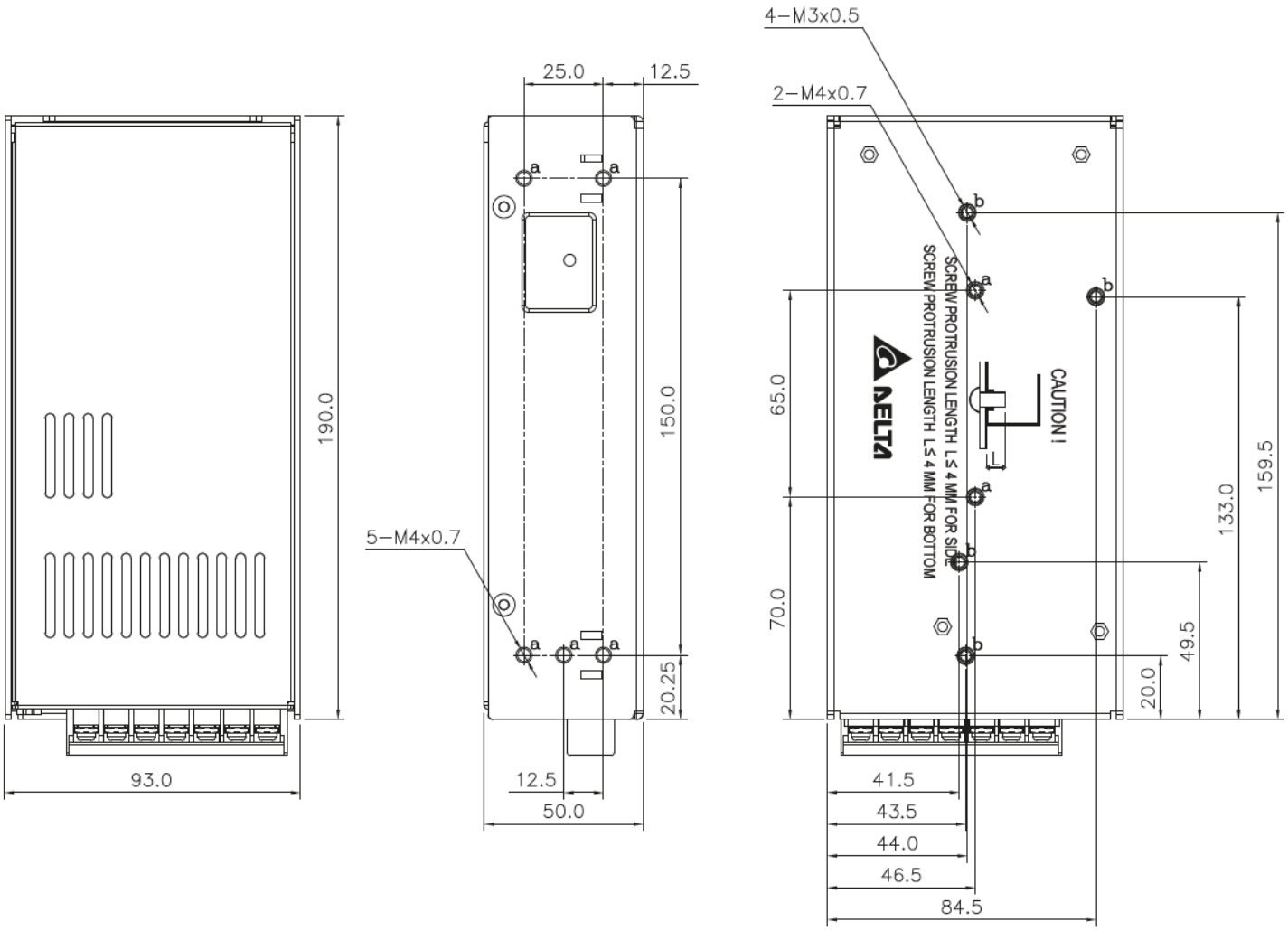

All parameters are specified at 25°C ambient unless otherwise indicated.

PMF Panel Mount Power Supply

24V 240W 1 Phase / PMF-24V240WC□□

L x W x D: 190 x 93 x 50 mm (PMF-24V240WCA□: Terminal Block)

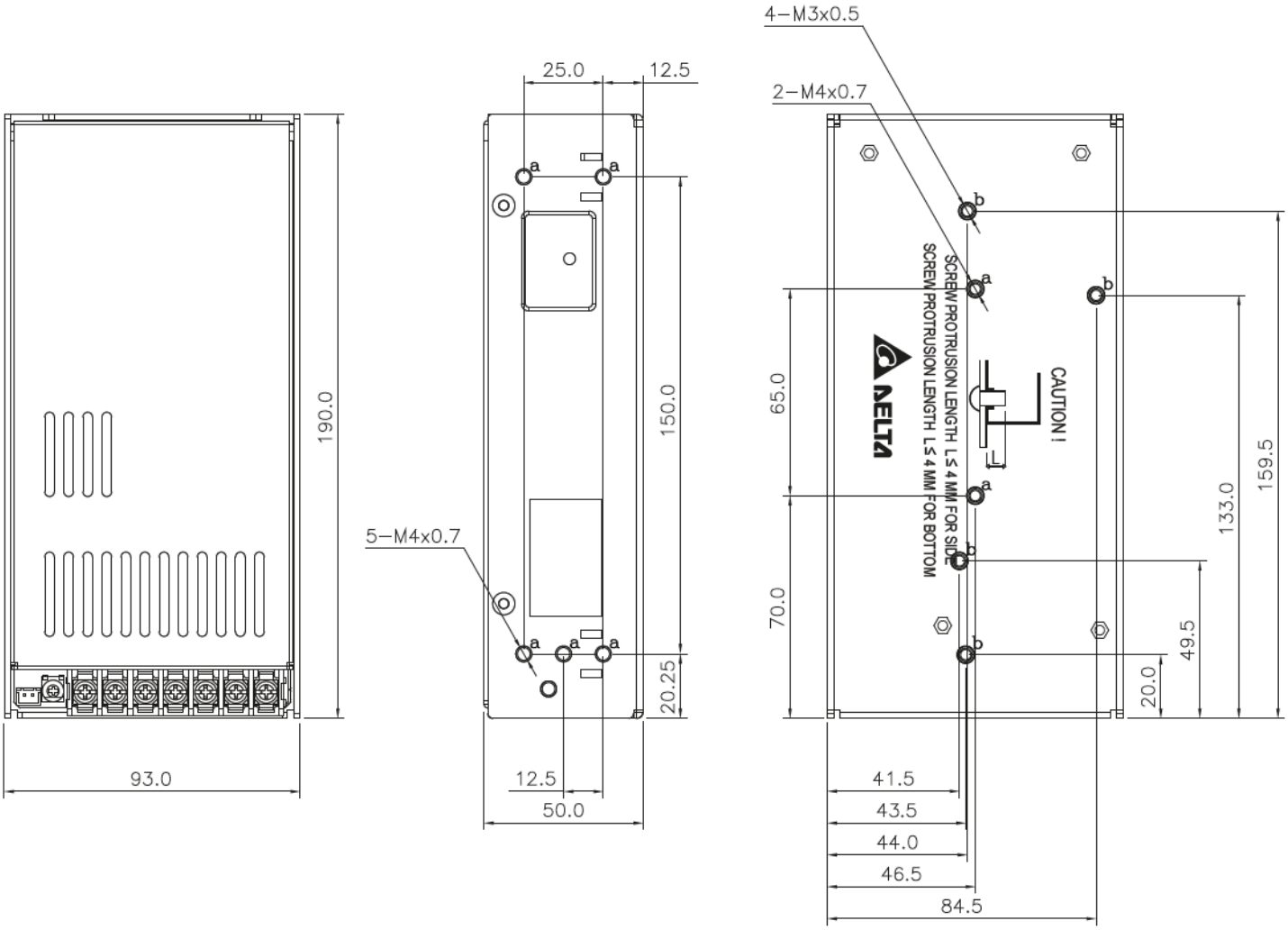

All parameters are specified at 25°C ambient unless otherwise indicated.
www.DeltaPSU.com (November 2013, Rev. 00)

PMF Panel Mount Power Supply

24V 240W 1 Phase / PMF-24V240WC□□

Engineering Data

De-rating

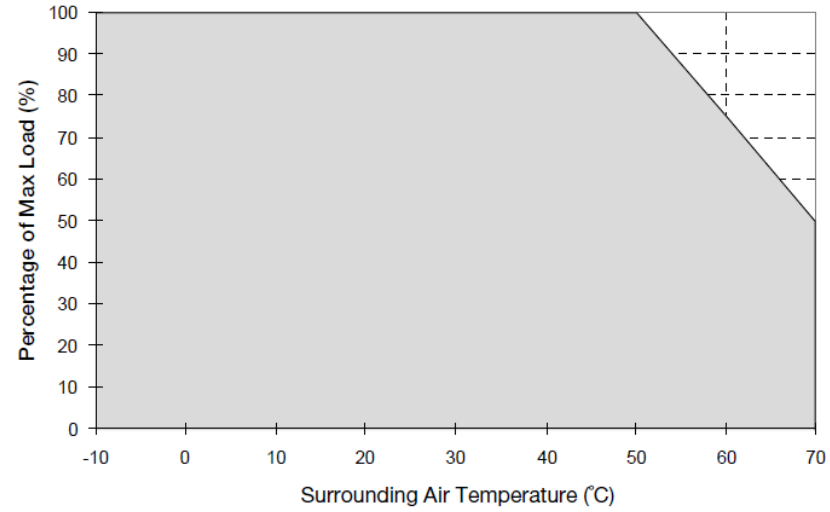

Fig. 1 De-rating for Vertical and Horizontal Mounting Orientation
> 50°C de-rate power by 2.5% / °C

Note

1. Power supply components may degrade, or be damaged, when the power supply is continuously used outside the shaded region, refer to the graph shown in Fig. 1.
2. If the output capacity is not reduced when the surrounding air temperature >70°C, the device will run into Over Temperature Protection. When activated, the output voltage will go into bouncing mode and will recover when the surrounding air temperature is lowered or the load is reduced as far as necessary to keep the device in working condition.
3. In order for the device to function in the manner intended, it is also necessary to keep a safety distance of 20mm with adjacent units while the device is in operation.
4. Depending on the surrounding air temperature and output load delivered by the power supply, the device can be very hot!
5. If the device has to be mounted in any other orientation, please do not hesitate to contact **info@deltapsu.com** for more details.

Output De-rating VS. Input Voltage

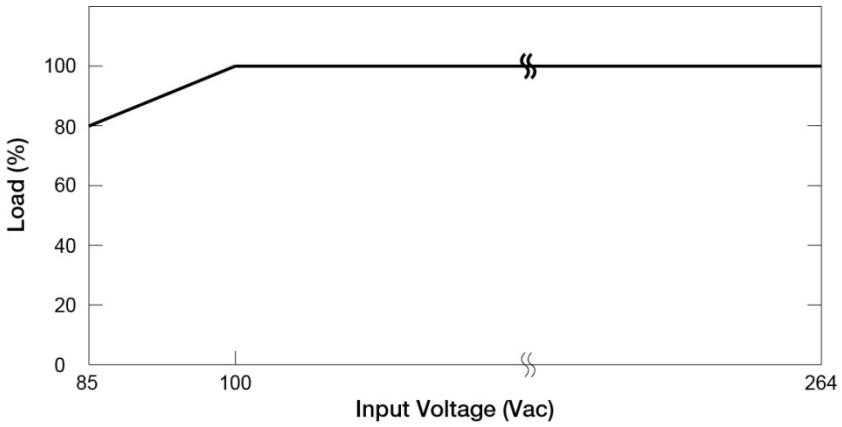

- No output power de-rating for the input voltage from 100Vac to 264Vac

All parameters are specified at 25°C ambient unless otherwise indicated.

PMF Panel Mount Power Supply

24V 240W 1 Phase / PMF-24V240WC□□

Assembly & Installation

Ⓐ Side Mounting: Fig. 2 and Fig. 3 show the mounting hole locations for power supply assembly onto a metal mounting surface. The power supply shall be mounted on minimum of 4 mounting holes using M4 screw of maximum 4mm length (Refer to Fig. 4). This is to maintain a safety distance between the screw and internal components.

Ⓑ Base Mounting: Fig. 2 and Fig. 3 show the mounting hole locations for power supply assembly onto a metal mounting surface. The power supply shall be mounted on minimum of 4 mounting holes using M3 screw or 2 mounting holes using M4 screw of maximum 4mm length (Refer to Fig. 4). This is to maintain a safety distance between the screw and internal components.

Ⓒ Connector

Ⓓ This surface belongs to customer's end system or panel where the power supply is mounted.

Base Mounting (Horizontal)	Base Mounting (Vertical)	Side Mounting (Horizontal)
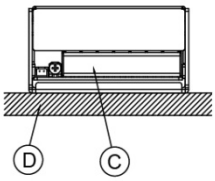	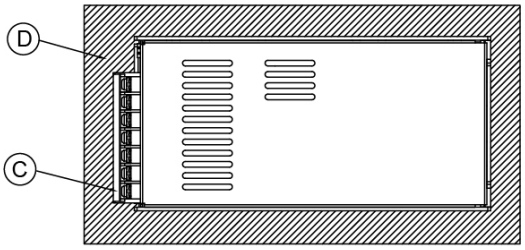	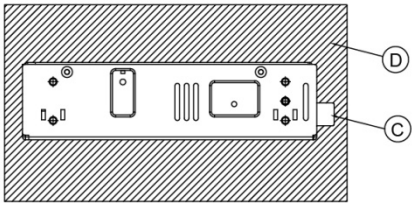

Fig. 2 Mounting Orientation

– Use flexible cable (stranded or solid) of AWG No. 20-12. The input/output connectors' allowable current is 23A max per pin. User should calculate and select the suitable wire specification (type/quantity/diameter) according to actual output current. The torque at the connector shall not exceed 13Kgf.cm. The insulation stripping length should not exceed 0.275" or 7mm.

– Recommended mounting torque of the product and its mounting accessories is 6~8Kgf.cm (for M3 screw) or 9~12Kgf.cm (for M4 screw).

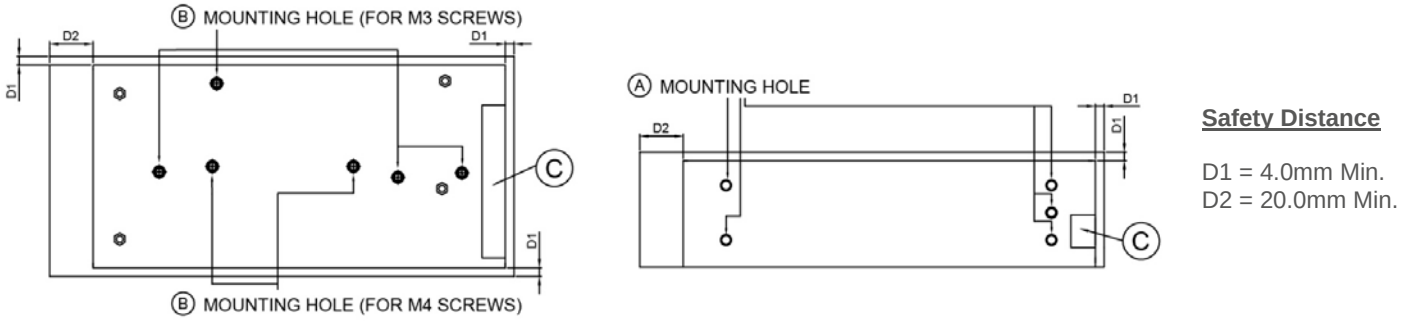

Fig. 3 Mounting Hole Locations and the Safety Distance

For safety reasons, please ensure the mounted device is kept at ≥ 4mm safety distance at all sides from other components and equipments. In addition, to ensure sufficient convection cooling, always maintain a distance of ≥ 20mm from ventilated surfaces while the device is in operation.

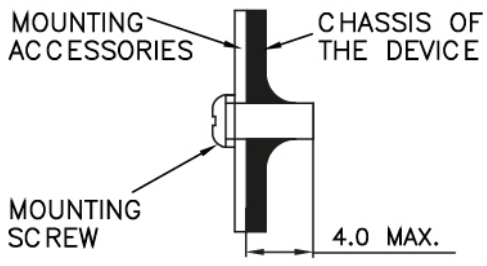

- Only use M4 screw ≤ 4 mm through the base mounting holes at Ⓐ. This is to keep a safe distance between the screw and internal components.
- Only use M3 or M4 screws ≤ 4 mm through the base mounting holes at Ⓑ. This is to keep a safe distance between the screw and internal components.

Fig. 4 Assembly Reference

PMF Panel Mount Power Supply

24V 240W 1 Phase / PMF-24V240WC□□

Improper Installations

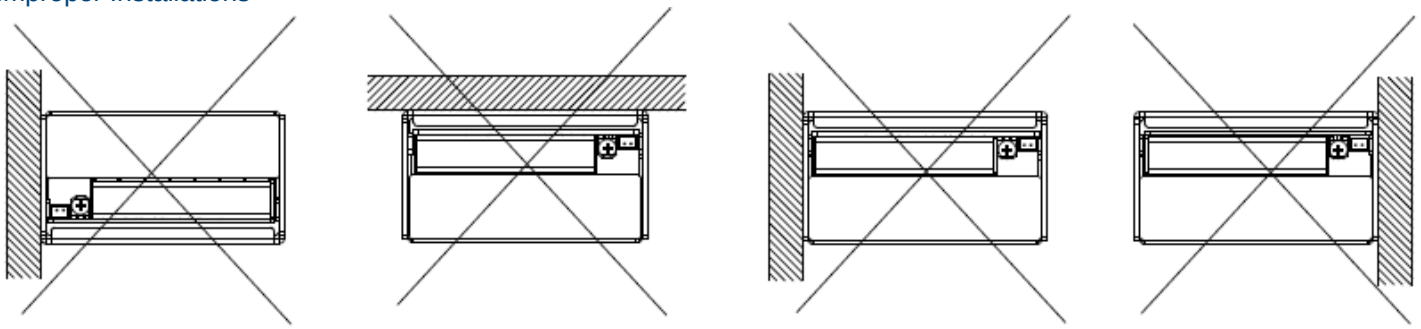

Safety Instructions

- The device is not recommended to be placed on low thermal conductive surface. For example, plastics.
- For safety reasons, please ensure the mounted device is kept at ≥ 4mm safety distance at all sides from other components and equipments. In addition, to ensure sufficient convection cooling, always maintain a distance of ≥ 20mm from ventilated surfaces while the device is in operation.
- Note that the enclosure of the device can become very hot depending on the ambient temperature and load of the power supply. Do not touch the device while it is in operation or immediately after power is turned OFF. Risk of burning!
- Do not touch the terminals while power is being supplied. Risk of electric shock.
- Prevent any foreign metal, particles or conductors from entering the device through the openings during installation. It may cause: - Electric shock; Safety Hazard; Fire; Product failure.
- Warning: When connecting the device, secure Earth connection before connecting L and N. When disconnecting the device, remove L and N connections before removing the Earth connection. The power supply must be mounted by metal screws onto a grounded metal surface. It is highly recommended that the Earth terminal on the connector be connected to the grounded metal surface.

Functional Manual

Remote ON/OFF Function

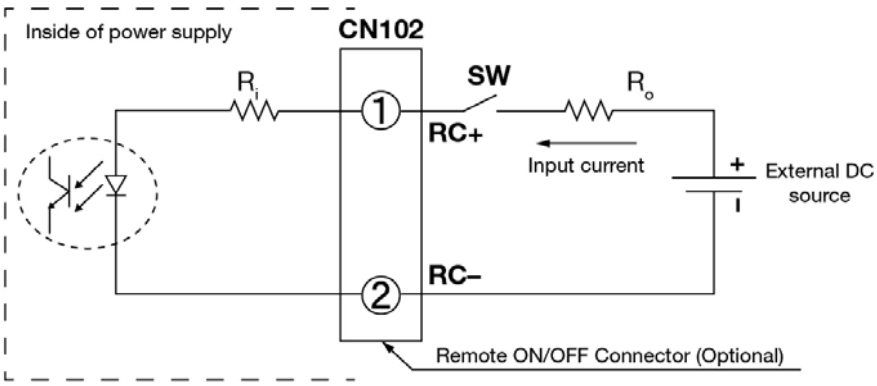

You can remotely control the power supply unit to turn ON/OFF by using an external DC source. Follow the DC power source voltage and current limiting defined in the table below.

Built-in Resistor R_i (ohm)	Voltage Between RC+ and RC- (V)		Input Current (mA)
	Output ON	Output OFF	
820	5-12.5	0-0.5	20 Max

Notes

1. Remote ON/OFF circuits are isolated from input, output and PE.
2. Please check if the polarity of the wire connector is the same as the external DC source. If not, the power would not turn on and the internal components may be damaged.
3. You do not need an external resistance R_O for current limit while the output voltage of external DC source is within the range of 5-12.5V. If the output voltage exceeds 12.5V, please use the following equation for the value of current limit resistance R_O.

$$R_O = \frac{Vcc - (3.5 + 0.006R_i)}{0.006}$$

PMF Panel Mount Power Supply

24V 240W 1 Phase / PMF-24V240WC□□

Functions

Start-up Time

The time required for the output voltage to reach 90% of its set value, after the input voltage is applied.

Rise Time

The time required for the output voltage to change from 10% to 90% of its set value.

Hold-up Time

Hold up time is the time when the AC input collapses and output voltage retains regulation for a certain period of time. The time required for the output to reach 95% of its set value, after the input voltage is removed.

■ **Graph illustrating the Start-up Time, Rise Time, and Hold-up Time**

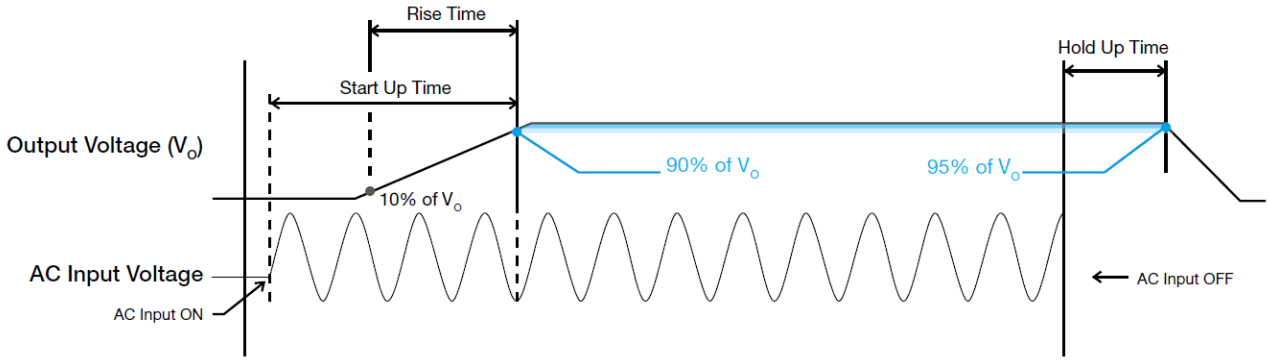

Inrush Current

Inrush current is the peak, instantaneous, input current measured and, occurs when the input voltage is first applied. For AC input voltages, the maximum peak value of inrush current will occur during the first half cycle of the applied AC voltage. This peak value decreases exponentially during subsequent cycles of AC voltage.

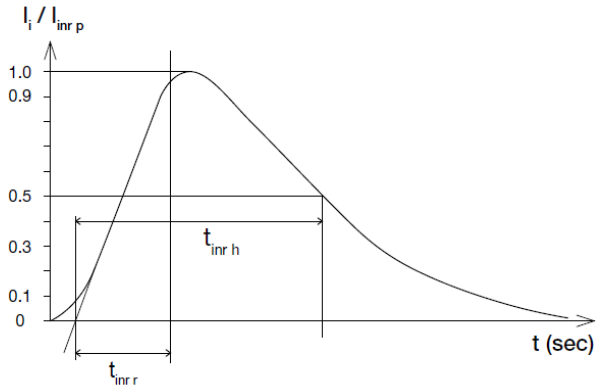

Dynamic Response

The power supply output voltage will remains within ±5% of its steady state value, when subjected to a dynamic load from 0 to 100% of its rated current.

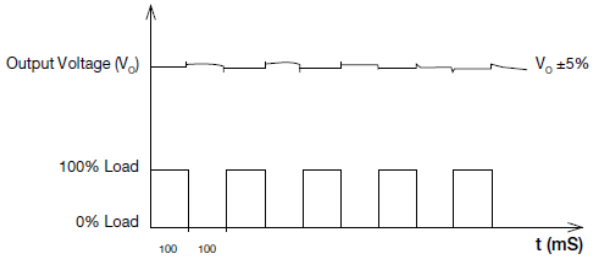

All parameters are specified at 25°C ambient unless otherwise indicated.

PMF Panel Mount Power Supply

24V 240W 1 Phase / PMF-24V240WC□□

Overload & Overcurrent Protections

The power supply's Overload (OLP) and Overcurrent (OCP) Protections will be activated when output current exceeds 105-150% of I_O (Max load). In such occurrence, the V_O will start to droop and once the power supply has reached its maximum power limit, the protection is activated and the power supply will go into "Hiccup mode" (Auto-Recovery). The power supply will recover once the fault condition of the OLP and OCP is removed and I_O is back within the specifications.

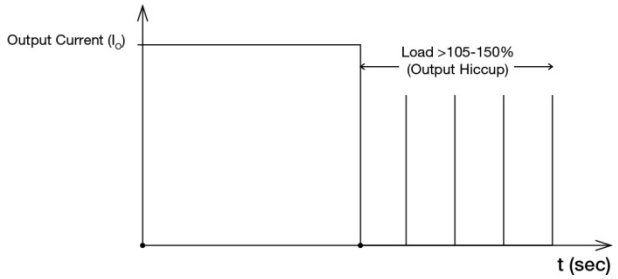

It is not recommended to prolong the duration of I_O when it is <105% but >100%, since it may cause damage to the PSU.

Short Circuit Protection

The power supply's output OLP/OCP function also provides protection against short circuits. When a short circuit is applied, the output current will operate in "Hiccup mode", as shown in the illustration in the OLP/OCP section on this page. The power supply will return to normal operation after the short circuit is removed.

Overvoltage Protection

The power supply's overvoltage circuit will be activated when its internal feedback circuit fails. The output voltage shall not exceed its specifications defined on Page 3 under "Protections".

The power supply should be latch.

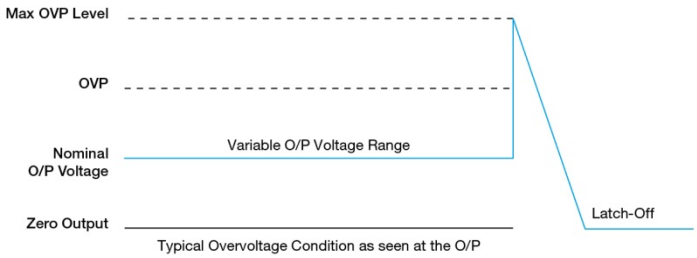

Over Temperature Protection

As mentioned above, the power supply also has Over Temperature Protection (OTP). In the event of a higher operating temperature at 100% load, the power supply will run into OTP when the operating temperature is beyond what is recommended in the de-rating graph. When activated, the output voltage will go into bouncing mode until the temperature drops to its normal operating temperature as recommended in the de-rating graph.

PMF Panel Mount Power Supply
24V 240W 1 Phase / PMF-24V240WC□□

Operating Mode

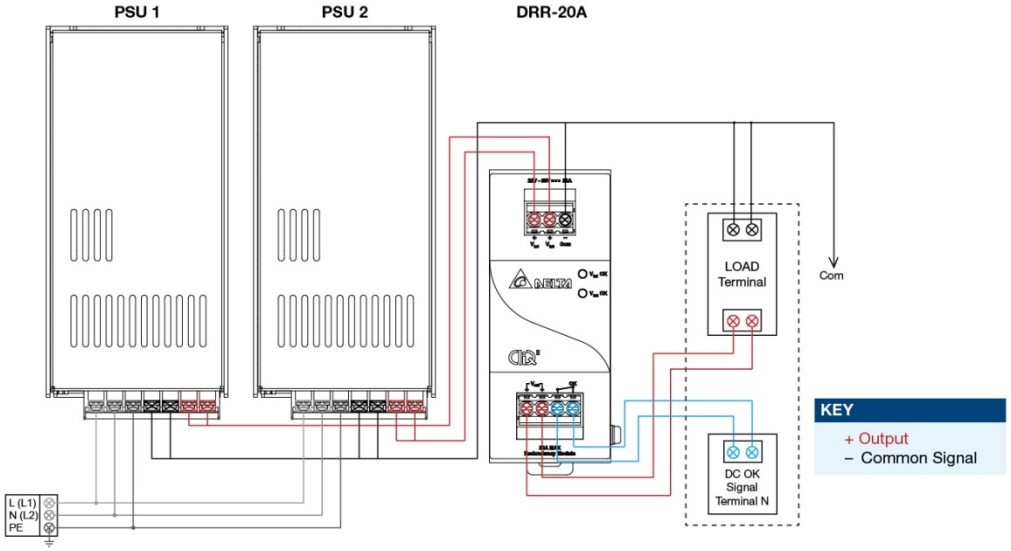

Fig. 5 Redundancy / Parallel Operation Connection Diagram

■ **Redundancy Operation**

In order to ensure proper redundancy operation for the power supply unit (PSU), ensure that the output voltage difference between the two units is kept at 0.45~0.50V for 24V supplies. Follow simple steps given below to verify:

Step 1.
Measure output voltage of PSU 1 and PSU 2. If PSU 1 is the master unit, then V_O of PSU 1 must be higher than PSU 2. In order to set the output voltage, connect the power supply to 50% load and set the PSU 1 and PSU 2 output voltage.

Step 2.
Connect the right DRR module, 20A as per the system requirement to the power supply units PSU 1 and PSU 2 at V_{in} 1 & V_{in} 2 respectively.

Step 3.
Connect the system load from V_{out}. Please note that output voltage V_{out} from DRR module will be = V_O (output voltage of power supply) – V_{drop}* (in DRR module).

■ **Parallel Operation**

These DRR modules can also be used for Parallel function in order to increase the output power by N+1 (e.g. 2.5A + 2.5A = 5A or 2.5A + 2.5A + 2.5A = 7.5A) or current sharing, and thus increasing the power supply and system reliability. Though the PMF-24V240WC□□ is not designed for current sharing, a good current sharing between two power supplies can be achieved by following simple steps as below (Refer to Fig. 5 for the Connection Diagram).

Step 1.
Set output load condition for both supplies at 50% and measure the output voltages.

Step 2.
Adjust output voltages to the same level or within ±25mV difference.

Step 3.
Connect PSU 1 and PSU 2 with the DRR-20A module and measure at V_{in} 1 & V_{in} 2 to verify the voltage difference. Ensure the voltages are within ±25mV.

Step 4.
Output voltage from DRR module V_{out} will be = V_O (output voltage of power supply) – V_{drop}* (in DRR module).

*V_{drop} will vary from 0.60V to 0.90V (Typical 0.65V) depending on the load current and surrounding air temperature.

PMF Panel Mount Power Supply

24V 240W 1 Phase / PMF-24V240WC□□

Others

Delta RoHS Compliant

Restriction of the usage of hazardous substances

The European directive 2011/65/EU limits the maximum impurity level of homogeneous materials such as lead, mercury, cadmium, chrome, polybrominated flame retardants PBB and PBDE for the use in electrical and electronic equipment. RoHS is the abbreviation for “Restriction of the use of certain hazardous substances in electrical and electronic equipment”.

This product conforms to this standard.

PFC – Norm EN 61000-3-2



Line Current Harmonic content

Typically, the input current waveform is not sinusodial due to the periodical peak charging of the input capacitor. In industrial environment, complying with EN 61000-3-2 is only necessary under special conditions. Complying to this standard can have some technical drawbacks, such as lower efficiency as well as some commercial aspects such as higher purchasing costs. Frequently, the user does not profit from fulfilling this standard, therefore, it is important to know whether it is mandatory to meet this standard for a specific application.