TECHNICAL DATASHEET

PMC Panel Mount Power Supply

24V 150W 1 Phase / PMC-24V150W1BX

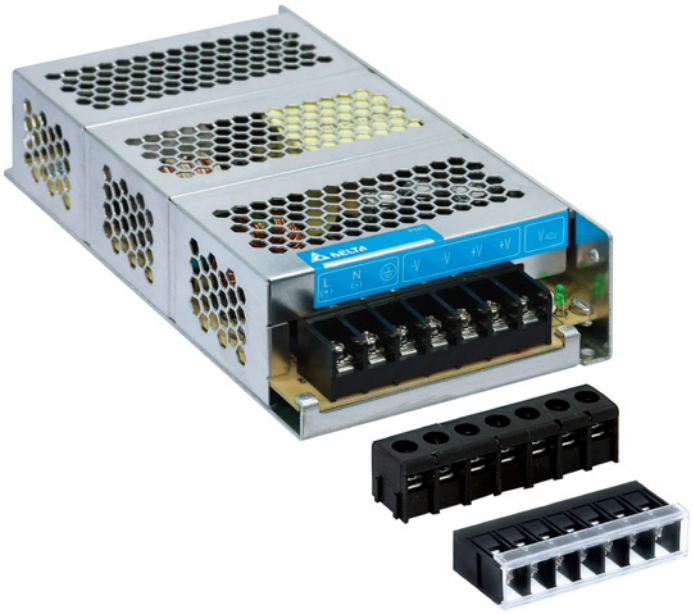

PMC

Highlights & Features

- Universal AC input range
- Allow low input voltage from 85Vac to 264Vac without power de-rating
- High efficiency and PF factor to conserve energy
- Full Aluminum casing for light weight and corrosion resistant handling
- MTBF > 700,000 hrs. as per Telcordia SR-332
- Overvoltage / Overcurrent / Over Temperature Protections
- IP20 Terminal Block and Front Face Terminal Block options

Safety Standards

E191395

Model Number:	PMC-24V150W1BX
Unit Weight:	0.54kg
Dimensions (L x W x D):	178 x 97 x 38 mm

General Description

The new PMC-24V150W1BX is the latest offering from the World's No.1 Power Supply Company. The product offers a nominal output voltage of 24V, a wide temperature range from -10°C to 70°C, and a highly dependable minimum hold-up time. The state-of-the-art design is made to withstand harsh industrial environments. What makes the product stand out from the crowd is its light weight full aluminium body design which can withstand shock and vibration requirements (in accordance to IEC60068-2-27 and IEC60068-2-6 respectively). Delta's PMC Panel Mount Power Supply also offers overvoltage and overload protections. Using a wide input range design, it is compatible worldwide. Best of all, this excellent design and quality does not come with a big price tag.

Model Information

PMC Panel Mount Power Supply

Model Number	Input Voltage Range	Output Voltage	Output Current
PMC-24V150W1BX	85-264Vac (125-375Vdc)	24Vdc	6.25A

Model Numbering

PM	C –	24V	150W	1	B	X
Panel Mount	Product Code C - Enclosed	Output Voltage	Output Power	Single Phase	With PFC Series	Connector Type A - Terminal Block J - IP20 Terminal Block* L - Front Face*

* Options

PMC Panel Mount Power Supply
24V 150W 1 Phase / PMC-24V150W1BX

Specifications

Input Ratings / Characteristics

Nominal Input Voltage	100-240Vac
Input Voltage Range	85-264Vac
Nominal Input Frequency	50-60Hz
Input Frequency Range	47-63Hz
Nominal DC Input Voltage	125-250Vdc
DC Input Voltage Range	125-375Vdc
Input Current	< 1.70A @ 115Vac, < 1.00A @ 230Vac
Efficiency at 100% Load	> 88.0% @ 115Vac, > 89.0% @ 230Vac
Max Inrush Current	< 60A @ 115Vac, < 120A @ 230Vac
Power Factor	> 0.99 @ 115Vac, > 0.93 @ 230Vac
Leakage Current	< 1mA @ 240Vac

Output Ratings / Characteristics

Nominal Output Voltage	24Vdc
Output Voltage Tolerance	± 2% (initial set point tolerance from factory)
Output Voltage Adjustment Range	22-28Vdc
Output Current	6.25A
Output Power	150W
Line Regulation	< 0.5% typ. (@ 85-264Vac input, 100% load)
Load Regulation	< 1% typ. (@ 85-264Vac input, 0-100% load)
PARD (20MHz)	< 100mVpp
Rise Time	< 30ms @ nominal input (100% load)
Start-up Time	< 3000ms @ nominal input (100% load)
Hold-up Time	> 30ms @ 115Vac & 230Vac (100% load)
Dynamic Response (Overshoot & Undershoot O/P Voltage)	± 5% @ 0-100% load
Start-up with Capacitive Loads	6,000μF Max (CC Mode), 8,000μF Max (CR Mode)

Mechanical

Case Cover	Aluminium
Dimensions (L x W x D)	178 x 97 x 38 mm
Unit Weight	0.54 kg
Indicator	Green LED (DC OK)
Cooling System	Convection
Terminal	Refer to the Table on Page 7
Wire	Refer to the Table on Page 7

PMC Panel Mount Power Supply

24V 150W 1 Phase / PMC-24V150W1BX

Environment

Surrounding Air Temperature	Operating	-10°C to +70°C
	Storage	-25°C to +85°C
Power De-rating		> 50°C de-rate power by 2.5% / °C
Operating Humidity		5 to 95% RH (Non-Condensing)
Operating Altitude		0 to 5,000 Meters
Shock Test (Non-Operating)		IEC60068-2-27, 30G (300m/s^2) for a duration of 18ms
Vibration (Operating)		IEC60068-2-6, 10Hz to 150Hz @ 50m/s^2 (5G peak); 20 min per axis for all X, Y, Z direction
Pollution Degree		2

Protections

Overvoltage	< 32V, +10% / -5%, SELV Output, Hicc-up Mode, Non-Latching (Auto-Recovery)
Overload / Overcurrent	> 120% of rated load current, Hicc-up Mode, Non-Latching (Auto-Recovery)
Over Temperature	< 75°C Surrounding Air Temperature @ 100% load, Non-Latching (Auto-Recovery)
Short Circuit	Hicc-up Mode, Non-Latching (Auto-Recovery when the fault is removed)
Protection Against Shock	Class I with PE* connection

*PE: Primary Earth

Reliability Data

MTBF	> 700,000 hrs. as per Telcordia SR-332
Expected Cap Life Time	10 years (115Vac & 230Vac, 50% load @ 40°C)

Safety Standards / Directives

Electrical Safety		SIQ Bauart to EN60950-1, UL/cUL recognized to UL60950-1 and CSA C22.2 No. 60950-1, CB scheme to IEC60950-1, CCC to GB4943
CE		In conformance with EMC Directive 2004/108/EC and Low Voltage Directive 2006/95/EC
Material and Parts		RoHS Directive 2011/65/EU Compliant
Galvanic Isolation	Input to Output	3.0KVac
	Input to Ground	1.5KVac
	Output to Ground	0.5KVac

PMC Panel Mount Power Supply
24V 150W 1 Phase / PMC-24V150W1BX

EMC

EMC / Emissions		CISPR22, EN55022, FCC Title 47: Class B, GB9254
Immunity to		EN55024 Level 3; EN61000-4-2, Level 4 “Criteria A”
Electrostatic Discharge	**IEC61000-4-2**	Level 4 Criteria A[1)] Air Discharge: 15kV Contact Discharge: 8kV
Radiated Field	**IEC61000-4-3**	Level 3 Criteria A[1)] 80MHz–1GHz, 10V/M with 1kHz tone / 80% modulation
Electrical Fast Transient / Burst	**IEC61000-4-4**	Level 3 Criteria A[1)] 2kV
Surge	**IEC61000-4-5**	Level 3 Criteria A[1)] Common Mode[2)]: 2kV Differential Mode[3)]: 1kV
Conducted	**IEC61000-4-6**	Level 3 Criteria A[1)] 150kHz–80MHz, 10Vrms
Power Frequency Magnetic Fields	**IEC61000-4-8**	Criteria A[1)] 10A/Meter
Voltage Dips	**IEC61000-4-11**	100% dip; 1 cycle (20ms); Self Recoverable
Low Energy Pulse Test (Ring Wave)	**IEC61000-4-12**	Level 3 Criteria A[1)] Common Mode[2)]: 2kV Differential Mode[3)]: 1kV

1) Criteria A: Normal performance within the specification limits
2) Asymmetrical: Common mode (Line to earth)
3) Symmetrical: Differential mode (Line to line)

Block Diagram

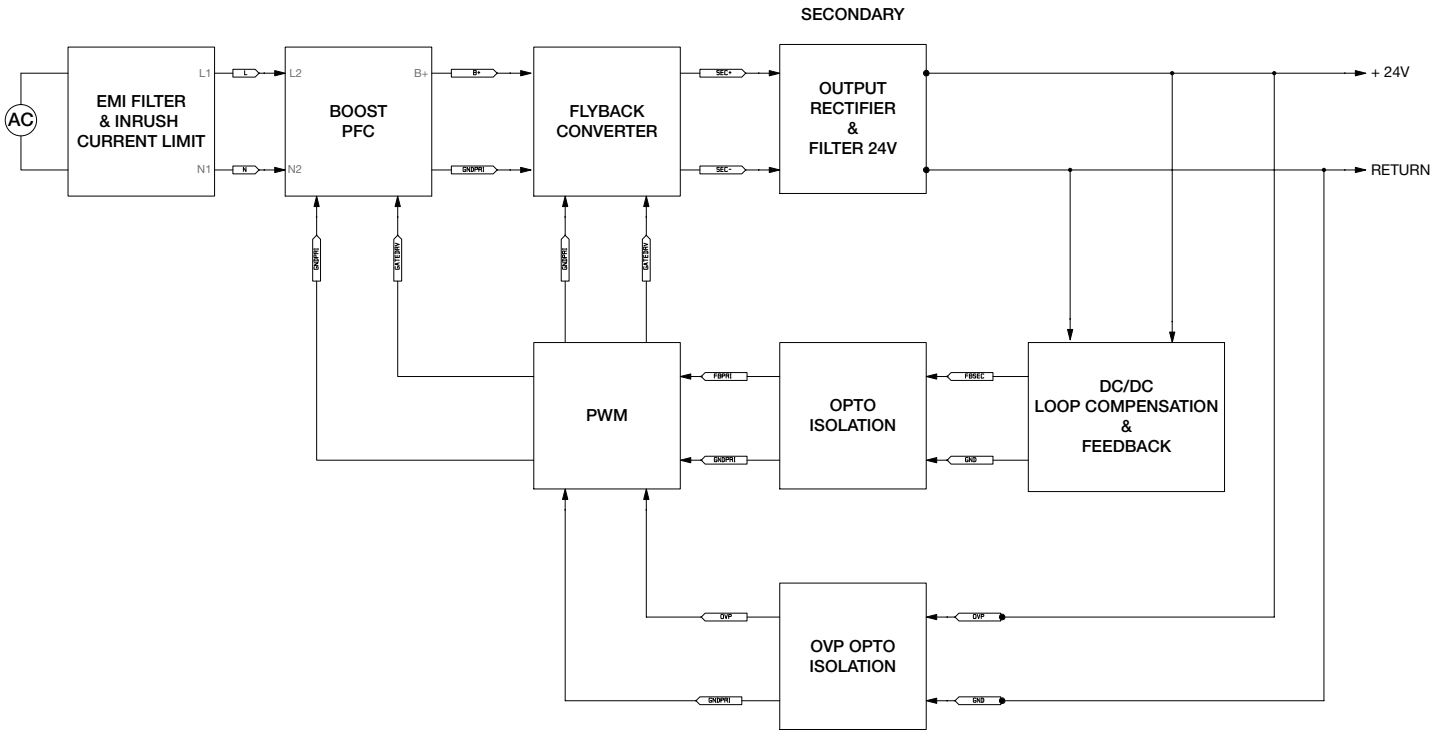

PMC Panel Mount Power Supply

24V 150W 1 Phase / PMC-24V150W1BX

Device Description

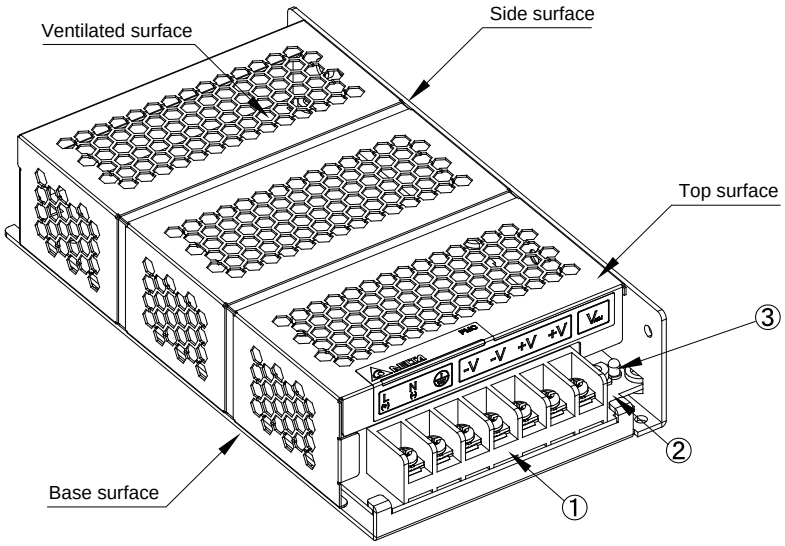

1) Input and Output terminal block connector
2) DC voltage adjustment potentiometer
3) DC OK control LED (Green)

Dimensions

L x W x D: 178 x 97 x 38 mm

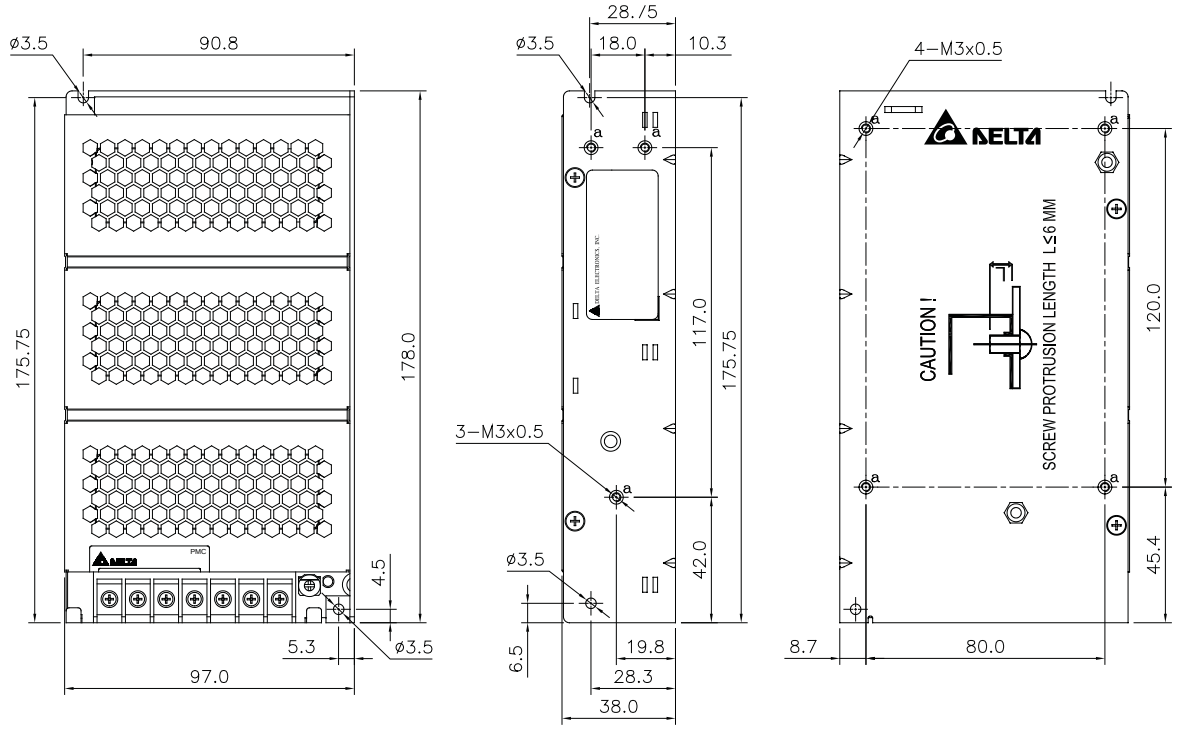

All parameters are specified at 25°C ambient unless otherwise indicated.
www.DeltaPSU.com (August 2014, Rev. 01)

PMC Panel Mount Power Supply
24V 150W 1 Phase / PMC-24V150W1BX

Engineering Data

De-rating

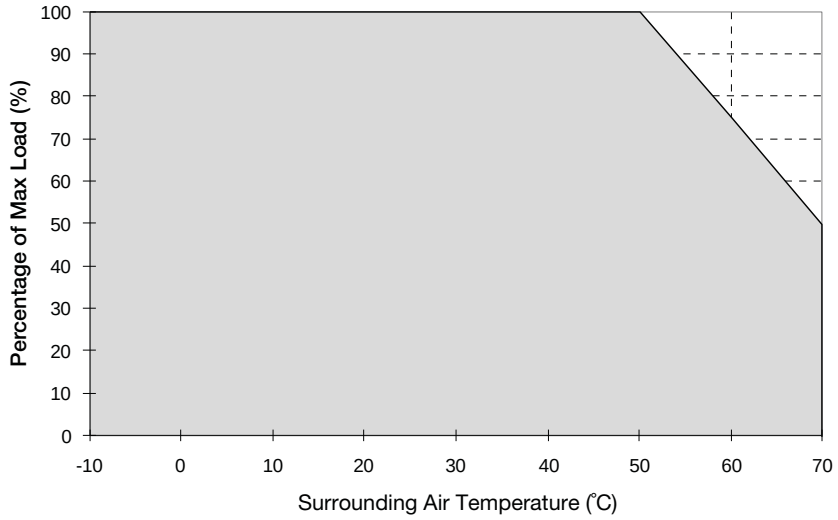

Fig. 1 De-rating for Vertical and Horizontal Mounting Orientation
> 50°C de-rate power by 2.5% / °C

Note

1. Power supply components may degrade, or be damaged, when the power supply is continuously used outside the shaded region, refer to the graph shown in Fig. 1.
2. If the output capacity is not reduced when surrounding air temperature >50°C, the device will run into Over Temperature Protection. When activated, the output voltage will go into bouncing mode and will recover when the surrounding air temperature is lowered or the load is reduced as far as necessary to keep the device in working condition.
3. In order for the device to function in the manner intended, it is also necessary to keep a safety distance of 20mm with adjacent units while the device is in operation.
4. Depending on the surrounding air temperature and output load delivered by the power supply, the device housing can be very hot!
5. If the device has to be mounted in any other orientation, please do not hesitate to contact **info@deltapsu.com** for more details.

Output Derating VS. Input Voltage

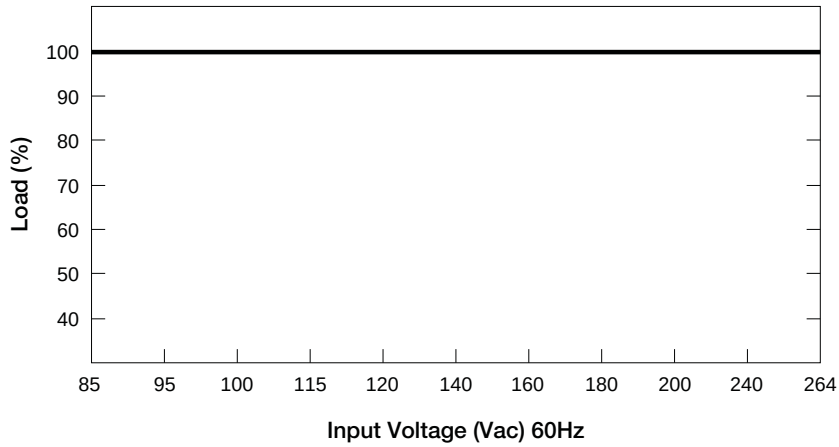

■ No output power derating for all range of input

PMC Panel Mount Power Supply
24V 150W 1 Phase / PMC-24V150W1BX

Assembling & Installation

Mounting holes for power supply assembly onto the mounting surface.

Ⓐ The power supply shall be mounted on minimum 2 mounting holes using M3 screw minimum 5mm length.
Ⓑ Connector
Ⓒ This surface belongs to customer's end system or panel where the power supply is mounted.

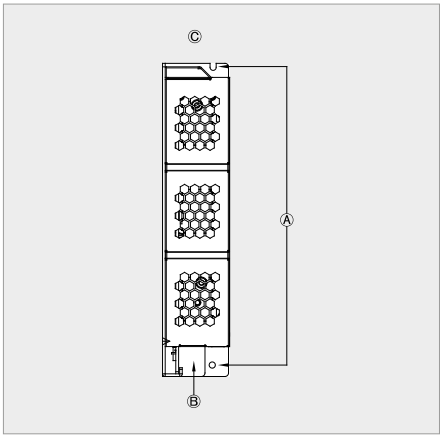

Fig. 2.1 Side Mounting (Vertical)

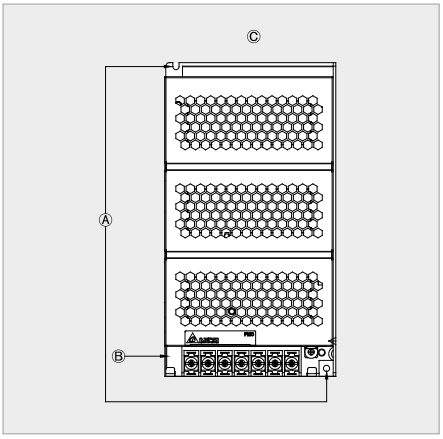

Fig. 2.2 Base Mounting (Vertical)

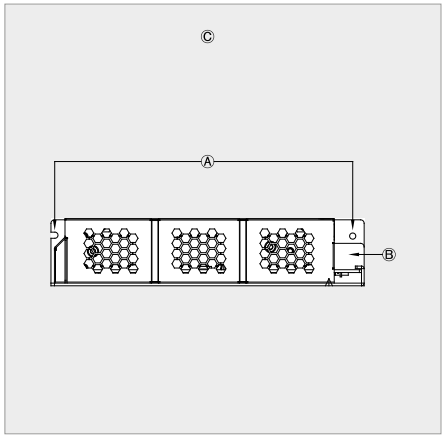

Fig. 2.3 Side Mounting (Horizontal)

Item	Connector Options		
	A - Terminal Block	J - IP20 Terminal Block*	L - Front Face*
Terminal	Rated 300V/15A	Rated 300V/20A	Rated 300V/20A
Wire	AWG 18-14	AWG 22-12	AWG 18-14

* Options

Installation of Mounting Accessories

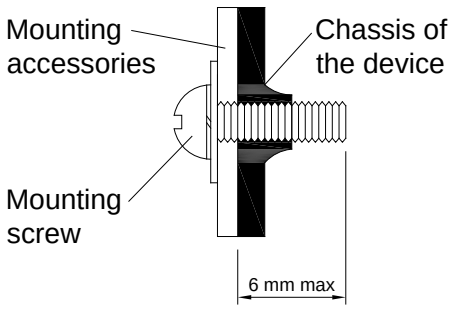

■ Only use M3 screw ≤ 6mm through the base mounting holes. This is to keep a safety distance between the screw and internal components.

■ Recommended mounting tightening torque: 4~7Kgf.cm.

Safety Instructions

- To ensure sufficient convection cooling, always maintain a safety distance of ≥ 20mm with adjacent units while the device is in operation.
- The device is not recommended to be placed on low thermal conductive surfaces, for example, plastics.
- Note that the enclosure of the device can become very hot depending on the ambient temperature and load of the power supply. Do not touch the device while it is in operation or immediately after power is turned OFF. Risk of burning!
- Do not touch the terminals while power is being supplied. Risk of electric shock.
- Prevent any foreign metal, particles or conductors to enter the device through the openings during installation. It can cause: - Electric shock; Safety hazard; Fire; Product failure.
- Warning: When connecting the device, secure Earth connection before connecting L and N. When disconnecting the device, remove L and N connections before removing the Earth connection.

PMC Panel Mount Power Supply
24V 150W 1 Phase / PMC-24V150W1BX

Functions

Start-up Time

The time required for the output voltage to reach 90% of its set value, after the input voltage is applied.

Rise Time

The time required for the output voltage to change from 10% to 90% of its set value.

Hold-up Time

Hold up time is the time when the AC input collapses and output voltage retains regulation for a certain period of time. The time required for the output to reach 95% of its set value, after the input voltage is removed.

■ Graph illustrating the Start-up Time, Rise Time, and Hold-up Time

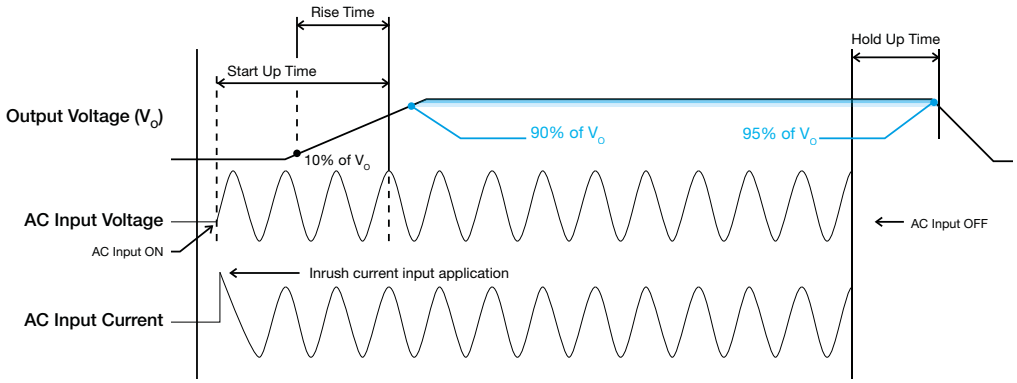

Inrush Current

Inrush current is the peak, instantaneous, input current measured; and, occurs when the input voltage is first applied. For AC input voltages, the maximum peak value of inrush current will occur during the first half cycle of the applied AC voltage. This peak value decreases exponentially during subsequent cycles of AC voltage.

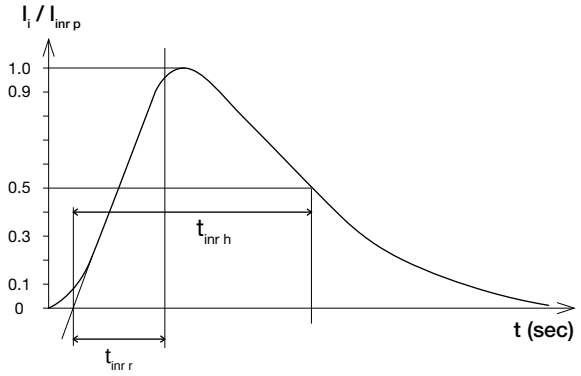

Dynamic Load

The power supply output voltage will remain within ±5% of its steady state value, when subjected to a dynamic load from 0 to 100% of its rated current.

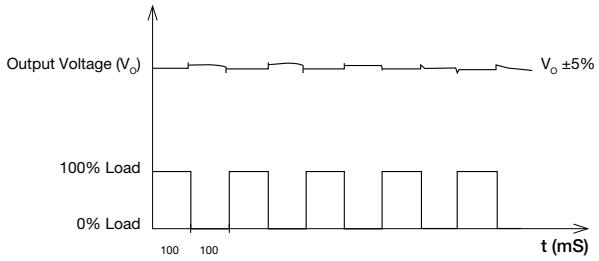

PMC Panel Mount Power Supply
24V 150W 1 Phase / PMC-24V150W1BX

Overload & Overcurrent Protections

The power supply's Overload (OLP) and Overcurrent (OCP) Protections will be activated when output current exceeds 120% of I_O (Max load). In such occurrence, the V_O will start to droop and once the power supply has reached its maximum power limit, the protection is activated and the power supply will go into "Hiccup mode" (Auto-Recovery). The power supply will recover once the fault condition of the OLP and OCP is removed and I_O is back within the specifications.

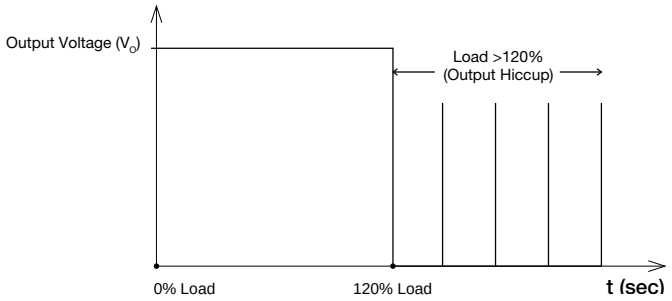

Additionally, if the I_O is <120% but >100% for a prolong period of time (depending on the load), the Over Temperature Protection (OTP) will be activated due to high temperature on critical components. The power supply will then go into "Hiccup mode" until the fault is removed.

Overvoltage Protection

The power supply's overvoltage circuit will be activated when its internal feedback circuit fails. The output voltage shall not exceed its specifications defined on Page 3 under "Protections".

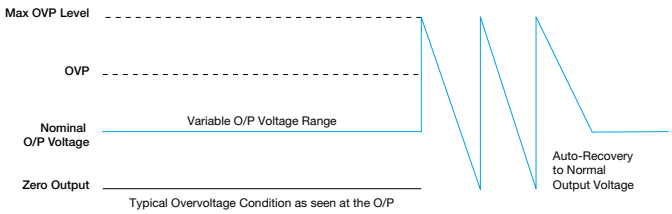

Over Temperature Protection

As mentioned above, the power supply also has Over Temperature Protection (OTP). This is activated when the overload condition persists for an extended duration and the output current is below the overload trigger point but >100% load. In the event of a higher operating condition at 100% load, the power supply will run into OTP when the surrounding air temperature is >75°C. When activated, the output voltage will go into bouncing mode until the operating surrounding air temperature drops to 50°C or output capacity is reduced as recommended in the de-rating graph.

Short Circuit Protection

The power supply's output OLP/OCP function also provides protection against short circuits. When a short circuit is applied, the output current will operate in "Hiccup mode", as shown in the illustration in the OLP/OCP section on this page. The power supply will return to normal operation after the short circuit is removed.

PMC Panel Mount Power Supply
24V 150W 1 Phase / PMC-24V150W1BA

Operating Mode

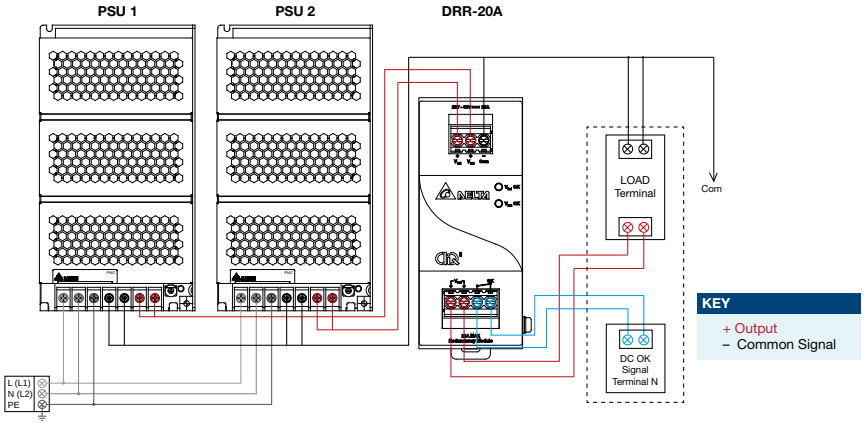

Fig. 3 Redundancy / Parallel Operation Connection Diagram

■ Redundancy Operation

In order to ensure proper redundancy operation for the power supply unit (PSU), ensure that the output voltage difference between the two units is kept at 0.45~0.50V for 24V supplies. Follow simple steps given below to verify:

Step 1.
Measure output voltage of PSU 1 and PSU 2. If PSU 1 is the master unit, then V_o of PSU 1 must be higher than PSU 2.

In order to set the output voltage connect the power supply to 50% load and set the PSU 1 and PSU 2 output voltage.

Step 2.
Connect the right DRR module, 20A as per the system requirement to the power supply units PSU 1 and PSU 2 at V_{in} 1 & V_{in} 2 respectively.

Step 3.
Connect the system load from V_{out}. Please note that output voltage V_{out} from DRR module will be = V_o (output voltage of power supply) – V_{drop}* (in DRR module).

■ Parallel Operation

These DRR modules can also be used for Parallel function in order to increase the output power by N+1 (e.g. 2.5A + 2.5A = 5A or 2.5A + 2.5A + 2.5A = 7.5A) or current sharing, and thus increasing the power supply and system reliability. Though the PMC-24V150W1BX is not designed for current sharing, a good current sharing between two power supplies can be achieved by following simple steps as below (Refer to Fig. 3 for the Connection Diagram).

Step 1.
Set output load condition for both supplies at 50% and measure the output voltages.

Step 2.
Adjust output voltages to the same level or within ±25mV difference.

Step 3.
Connect PSU 1 and PSU 2 with the DRR-20A module and measure V_{in} 1 and V_{in} 2 to verify the voltage difference. Ensure the voltages are within ±25mV.

Step 4.
Output voltage from DRR module Vout will be = V_o (output voltage of power supply) – V_{drop}* (in DRR module).

***V_{drop} will vary from 0.60V to 0.90V (Typical 0.65V) depending on the load current and surrounding air temperature.**

PMC Panel Mount Power Supply
24V 150W 1 Phase / PMC-24V150W1BA

Others

Delta RoHS Compliant



Restriction of the usage of hazardous substances

The European directive 2011/65/EU limits the maximum impurity level of homogeneous materials such as lead, mercury, cadmium, chrome, polybrominated flame retardants PBB and PBDE for the use in electrical and electronic equipment. RoHS is the abbreviation for “Restriction of the use of certain hazardous substances in electrical and electronic equipment”.

This product conforms to this standard.

PFC – Norm EN 61000-3-2

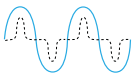

Line Current Harmonic content

Typically, the input current waveform is not sinusodial due to the periodical peak charging of the input capacitor. In industrial environment, complying with EN 61000-3-2 is only necessary under special conditions. Complying to this standard can have some technical drawbacks, such as lower efficiency as well as some commercial aspects such as higher purchasing costs. Frequently, the user does not profit from fulfilling this standard, therefore, it is important to know whether it is mandatory to meet this standard for a specific application.