PMC Panel Mount Power Supply

24V 300W 1 Phase / PMC-24V300W1BA



PMC

Highlights & Features

- Universal AC input range from 85Vac to 264Vac without power de-rating
- Full Aluminum casing for light weight and corrosion resistant handling
- High PF > 0.99 @ 115Vac
- Built-in Remote On/Off and 12V SB (STANDBY) / 0.5A
- Overvoltage / Overcurrent / Over Temperature Protections
- IP20 certified

Safety Standards

CB Certified for worldwide use

Model Number: PMC-24V300W1BA
Unit Weight: 0.82 kg
Dimensions (L x W x D): 199 mm x 105 mm x 41 mm

General Description

The new Hi-End Panel Mount Power Supply with Remote sense function & 12V STANDBY / 0.5A is the latest offering from one of the world's largest power supply manufacturers and solution providers - Delta. The product range offers a nominal output voltage of 24V, a wide temperature range from -10°C to +70°C and a highly dependable minimum holdup time. The state-of-the-art design is made to withstand harsh industrial environments. What makes the product stands out from the crowd is its lightweight full aluminum body design which can withstand shock and vibration according to IEC60068-2. Delta's Panel Mount Power Supply also offers overvoltage and overload protection. Using a wide input voltage range design, it is compatible worldwide. The input also includes DC operating voltage from 125-375Vdc. Best of all, this excellent design and quality does not come with a big price tag.

Model Information

PMC Panel Mount Power Supply

Model Number	Input Voltage Range	Output Voltage	Output Current
PMC-24V300W1BA	85-264Vac (125-375Vdc)	24Vdc	V1: 12.5A, V2 SB: 0.50A

Model Numbering

PMC	24V	300W	1	B	A
PMC Series	Output Voltage	Output Power	Single Phase	With PFC	Terminal Block Connector

PMC Panel Mount Power Supply

24V 300W 1 Phase / PMC-24V300W1BA

Specifications

Input Ratings / Characteristics

Nominal Input Voltage	100-240Vac
Input Voltage Range	85-264Vac
Nominal Input Frequency	50-60Hz
Input Frequency Range	47-63Hz
Nominal DC Input Voltage	125-250Vdc
DC Input Voltage Range	125-375Vdc
Input Current	< 4.0A @ 115Vac, < 2.0A @ 230Vac
Efficiency at 100% Load	> 86% @ 115Vac, > 88% @ 230Vac
Max Inrush Current	< 35A @ 115Vac, < 70A @ 230Vac
Power Factor	>0.99 @ 115Vac , > 0.97 @ 230Vac
Leakage Current	< 1mA @ 240Vac

Output Ratings / Characteristics

Nominal Output Voltage	V1: 24V, V2 SB: 12V
Output Voltage Tolerance	V1: ± 2% (initial set point tolerance from factory)
Output Voltage Adjustment Range	V1: 22-28Vdc
Output Current	V1: 12.5A, V2 SB: 0.50A
Output Power	300W
Line Regulation	< 0.5% Typical (@ 85 to 264Vac input, 100% load)
Load Regulation	< 1% Typical (@ 85 to 264Vac input, 100% load)
PARD (20MHz)	V1: <100mVpp , V2 SB: <200mVpp
Rise Time	< 30ms @ nominal input (100% load)
Start-up Time	< 1000ms @ nominal input (100% load)
Hold-up Time	> 15ms @ nominal input, 100% load
Dynamic Response (Overshoot & Undershoot O/P Voltage)	± 5% @ 0-100% load
Start-up with Capacitive Loads	8,000µF Max

Mechanical

Case Cover		Aluminium
Dimensions (L x W x D)		199 mm x 105 mm x 41 mm
Unit Weight		0.82 kg
Indicator		Green LED (DC OK)
Cooling System		Built-in Fan
Terminal	Input and Output	Terminal Block 7 Pin (Rated 300Vac/20A)
	CN2	Connector: JWT A2006WR0-2x4P Mating connector: JWT A2006HOO-2*4P or equivalent Terminal: JWT A2006TOP-2 (x8) or equivalent
Wire		AWG 20-16
Noise		Sound Pressure Level (SPL) <40dBA

PMC Panel Mount Power Supply

24V 300W 1 Phase / PMC-24V300W1BA

Environment

Surrounding Air Temperature	Operating	-10°C to +70°C
	Storage	-25°C to +85°C
Power De-rating		> 50°C de-rate power by 2.5% / °C
Operating Humidity		< 95% RH
Operating Altitude		3,000 Meters
Shock Test (Non-Operating)		IEC60068-2-27, 30G (300m/S²) for a duration of 18ms 3 times per direction, 18 times in total
Vibration (Non-Operating)		IEC60068-2-6, 10Hz to 150Hz @ 50m/S² (5G peak); 20 min per axis for all X, Y, Z direction
Pollution Degree		2

Protections

Overvoltage	V1: < 32V ±10%, V2 SB: < 16V ±15%, SELV output, Hicc-up Mode, Non-Latching (Auto recovery).
Overload / Overcurrent	> 120% of rated load current, Hicc-up Mode, Non-Latching (Auto recovery).
Over Temperature	< 75°C Ambient Temp@ 100% load, Non-Latching (Auto-recovery).
Short Circuit	Hicc-up Mode, Non-Latching (Auto-recovery when the fault is removed).
Degree of Protection	IP20
Protection Against Shock	Class I with PE connection

*PE: Primary Earth

Reliability Data

MTBF	> 700,000 hrs, as per per Telcordia SR-332
Expected Cap Life Time	10 years (115Vac & 230Vac, 50% load @ 40°C)

PMC Panel Mount Power Supply

24V 300W 1 Phase / PMC-24V300W1BA

Safety Standards / Directives

Electrical Safety		SIQ Bauart to EN60950-1, UL/cUL recognized to UL60950-1 and CSA C22.2 No. 60950-1, CB scheme to IEC60950-1, CCC to GB4943
CE		In conformance with EMC Directive 2004/108/EC and Low Voltage Directive 2006/95/EC
Material and Parts		RoHS Directive 2011/65/EU Compliant
Galvanic Isolation	Input to Output	3.0 KVac
	Input to Ground	1.5 KVac
	Output to Ground	500 Vac

EMC

EMC / Emissions		CISPR22, EN55022, FCC Title 47: Class B, GB9254
Immunity to		
Electrostatic Discharge	IEC61000-4-2	Level 4 Criteria A[1)] Air Discharge: 15kV Contact Discharge: 8kV
Radiated Field	IEC61000-4-3	Level 3 Criteria A[1)] 80MHz-1GHz, 10V/M with 1kHz tone / 80% modulation
Electrical Fast Transient / Burst	IEC61000-4-4	Level 3 Criteria A[1)] 2kV
Surge	IEC61000-4-5	Level 3 Criteria A[1)] Common Mode[2)]: 2kV Differential Mode[3)]: 1kV
Conducted	IEC61000-4-6	Level 3 Criteria A[1)] 150kHz-80MHz, 10Vrms
Power Frequency Magnetic Fields	IEC61000-4-8	Criteria A[1)] 10A/Meter
Voltage Dips	IEC61000-4-11	100% dip; 1 cycle (20ms); Self Recoverable
Low Energy Pulse Test (Ring Wave)	IEC61000-4-12	Level 3 Criteria A[1)] Common Mode[2)]: 2kV Differential Mode[3)]: 1kV

1) Criteria A: Normal performance within the specification limits
2) Asymmetrical: Common mode (Line to earth)
3) Symmetrical: Differential mode (Line to line)

PMC Panel Mount Power Supply

24V 300W 1 Phase / PMC-24V300W1BA

Block Diagram

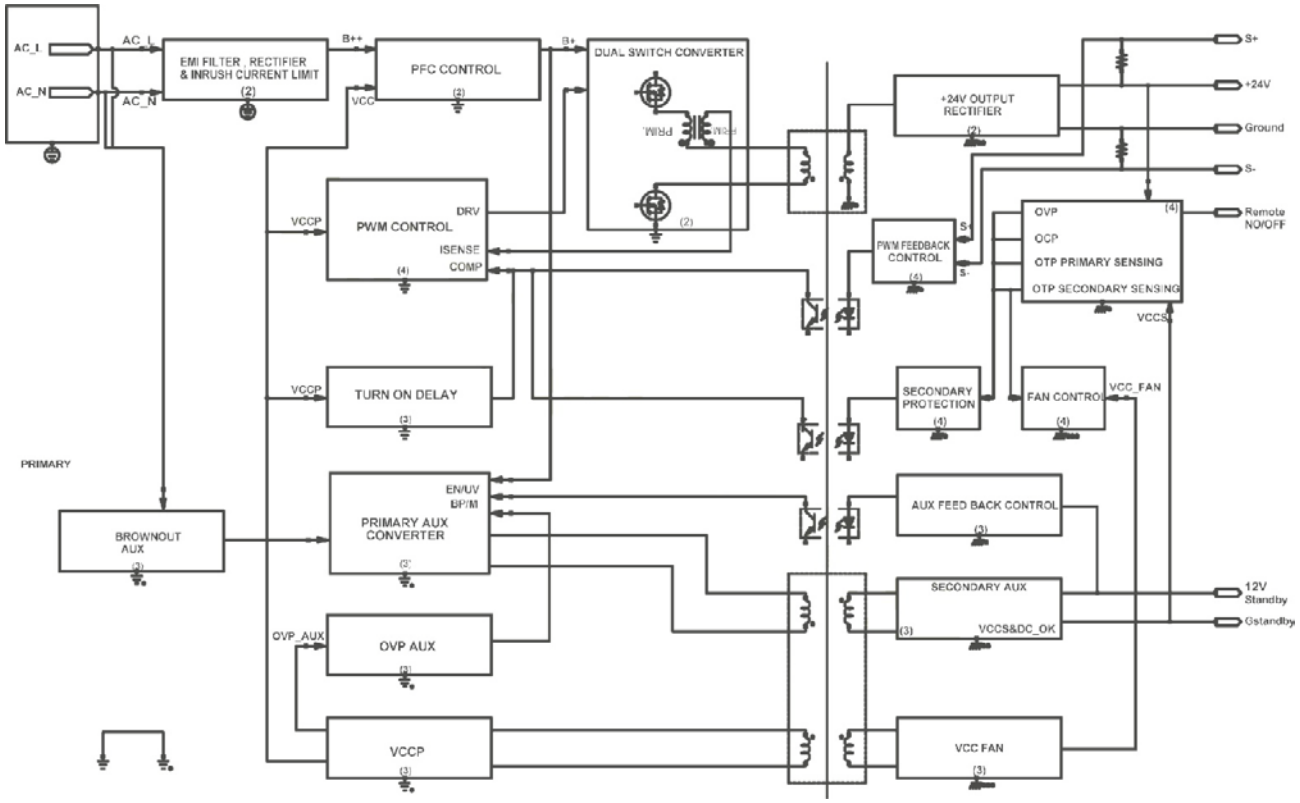

Device Description

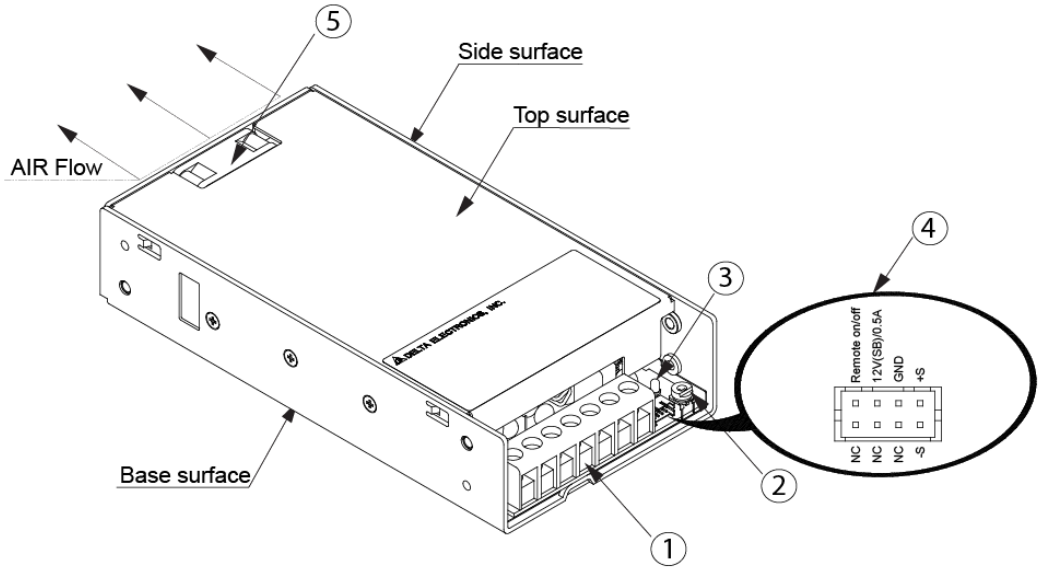

1) Input & Output terminal block connector
2) DC Voltage adjustment potentiometer
3) DC OK control LED (Green)
4) CN2: Remote Sense Function & 12V STANDBY / 0.5A
5) DC Fan and Air flow direction

PMC Panel Mount Power Supply

24V 300W 1 Phase / PMC-24V300W1BA

Dimensions

H x W x D: 199 x 105 x 41 mm

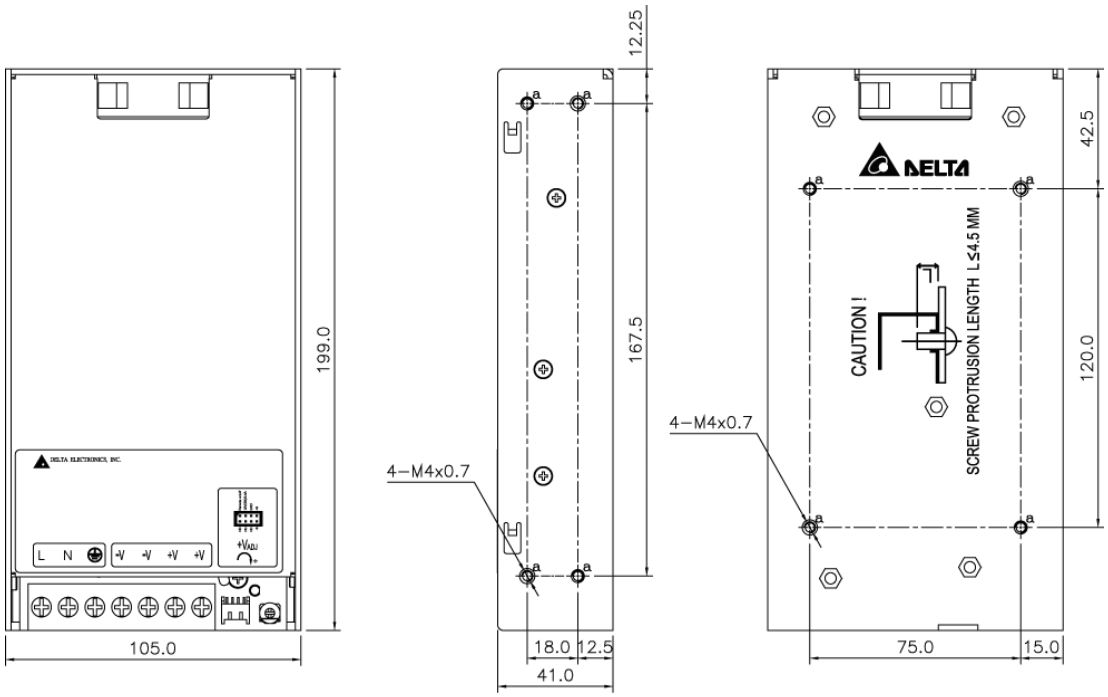

Engineering Data

De-rating VS surrounding air temperature

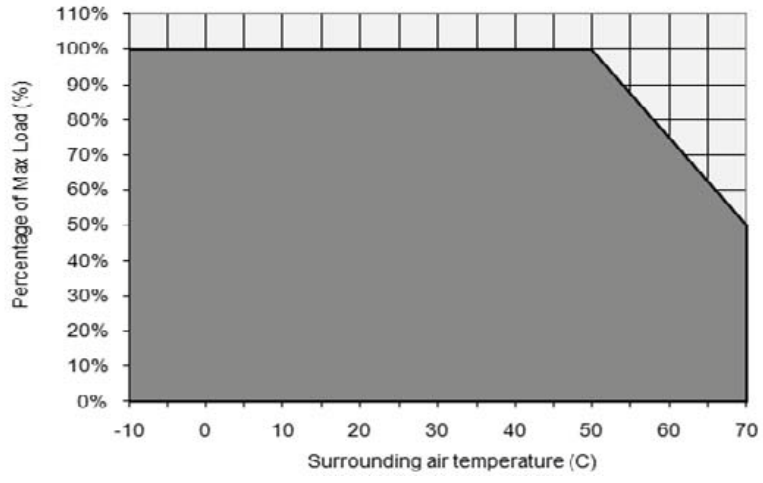

Fig. 1 De-rating for Vertical and Horizontal Mounting Orientation > 50°C de-rate power by 2.5% / °C

Note

1. Power supply components may degrade, or be damaged, when the power supply is continuously used outside the shaded region, refer to the graph shown in Fig. 1.
2. If the output capacity is not reduced when the surrounding air temperature > 50°C, the device may run into Over Temperature Protection. When activated, the output voltage will go into bouncing mode and will recover when the surrounding air temperature is lowered or the load is reduced as far as necessary to keep the device in working condition.
3. If the device has to be mounted in any other orientation, please do not hesitate to contact **info@deltapsu.com** for more details.
4. In order for the device to function in the manner intended, it is also necessary to keep a safety distance of 20mm with adjacent units while the device is in operation.
5. Depending on the surrounding air temperature and output load delivered by the power supply, the device housing can be very hot!

PMC Panel Mount Power Supply
24V 300W 1 Phase / PMC-24V300W1BA

De-rating VS AC input voltage

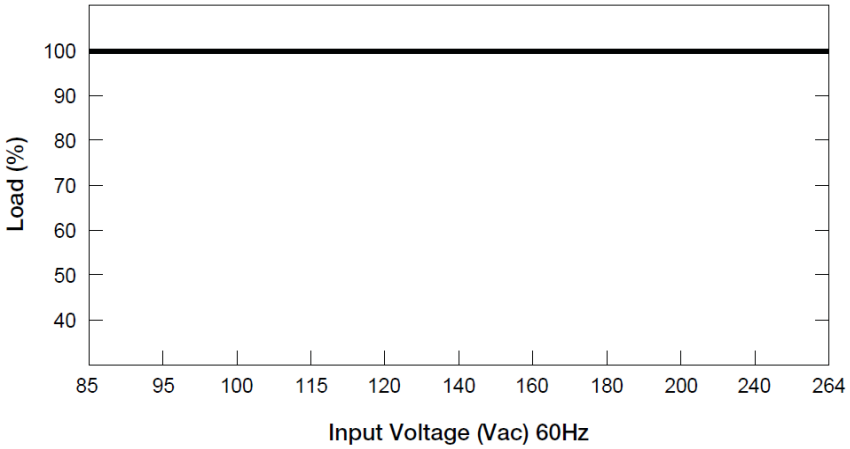

■ No output power de-rating across the entire input voltage range

Assembly & Installation

Mounting

Ⓐ Mounting holes
Ⓑ Input / Output connector
Ⓒ Mounting surface (customer system)
Ⓓ DC FAN

Side Mounting (Vertical) **Base Mounting (Vertical)** **Side Mounting (Horizontal)**

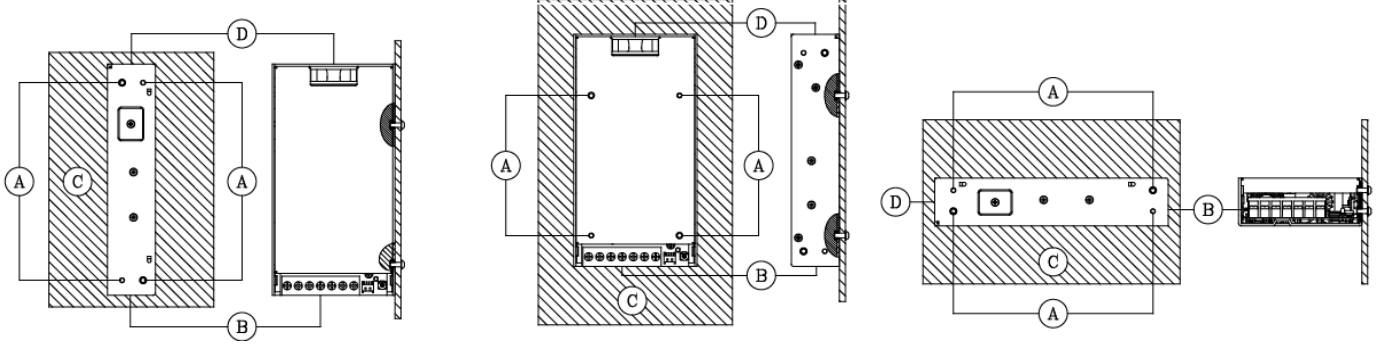

Fig. 2 Mounting Orientation

Installation

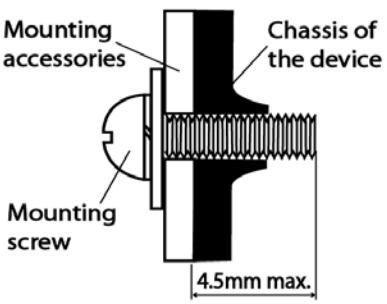

- Only use M4 screw ≤ 4.5 mm through the base mounting holes. This is to keep a safe distance between the screw and internal components.
- Recommended mounting tightening torque: 4~8 Kgf.cm

PMC Panel Mount Power Supply
24V 300W 1 Phase / PMC-24V300W1BA

Safety Instructions

- To ensure sufficient convection cooling, always maintain a safety distance of > 20mm from all ventilated surfaces while the device is in operation.
- The device is not recommended to be placed on low thermal conductive surface, for example, plastics.
- Note that the enclosure of the device can become very hot depending on the ambient temperature and load of the power supply. Do not touch the device while it is in operation or immediately after power is turned OFF. Risk of burning!
- Do not touch the terminals while power is being supplied. Risk of electric shock.
- Prevent any foreign metal, particles or conductors to enter the device through the openings during installation. It can cause: -- Electric shock; Safety Hazard; Fire; Product failure
- Warning: When connecting the device, secure Earth connection before connecting L and N. When disconnecting the device, remove L and N connections before removing the Earth connection.

Functional Manual

Pin Assignment of CN2

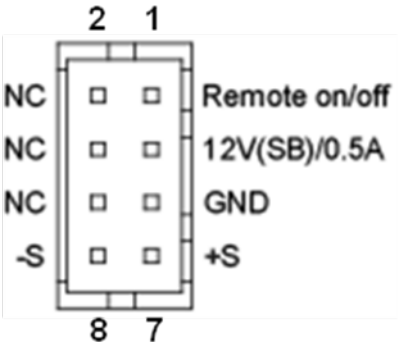

Pin	Functions	Descriptions
1	Remote on/off	Turn the output on and off by electrical SW or dry contact between Pin 5(GND); Short: Power OFF, Open: Power ON
2, 4, 6	NC	No Application
3	12V (SB)/ 0.5A	Auxiliary Voltage output 11.4 -12.6V, Reference to Pin 5 (GND). The maximum load current is 0.5A
5	GND	Ground reference for Remote on/off and 12V (SB)
7	+S	Positive sensing. The +S Signal should be connected to the positive terminal of the load
8	-S	Negative sensing. The -S signal should e connected to the negative terminal of the load

Configuration of CN2

1. Remote sense

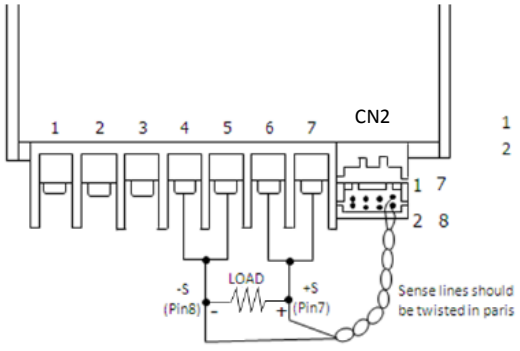

1	Remote on/off	12V/0.5A	GND	+S	7
2	NC	NC	NC	-S	8

2. Auxiliary Voltage: 12V (SB)/ 0.5A

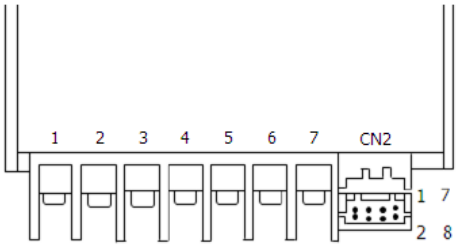

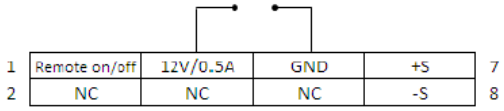

3. Remote on/off

Between pin1 and GND (pin5)	Output Status
SW ON (Short)	OFF
SW OFF (Open)	ON

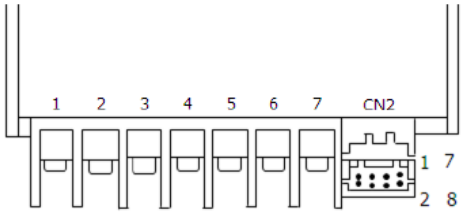

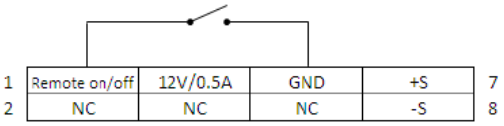

Functions

■ **Graph illustrating the Start-up Time, Rise Time, and Hold-up Time**

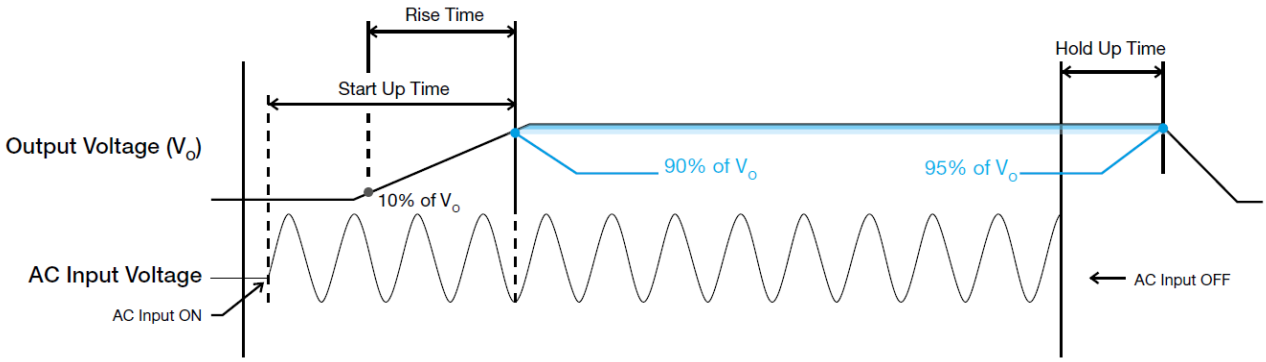

Start-up Time

The time required for the output voltage to reach 90% of its set value, after the input voltage is applied.

Rise Time

The time required for the output voltage to change from 10% to 90% of its set value.

Hold-up Time

Hold up time is the time when the AC input collapses and output voltage retains regulation for a certain period of time. The time required for the output to reach 95% of its set value, after the input voltage is removed.

PMC Panel Mount Power Supply

24V 300W 1 Phase / PMC-24V300W1BA

Inrush Current

Inrush Current is the first surge current seen on the input side when AC input is applied to the power supply. It is the first pulse captured; see a typical picture for the inrush current as seen in the power supply.

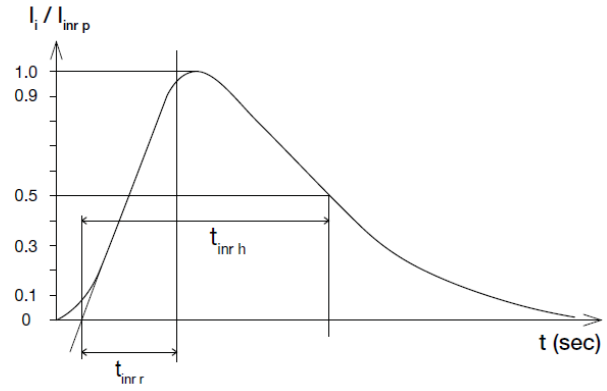

Dynamic Response

The power supply output voltage will remains within ±5% of its steady state value, when subjected to a dynamic load from 0 to 100% of its rated current.

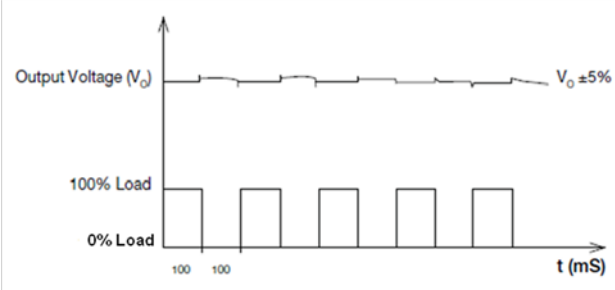

Overvoltage Protection

The power supply's overvoltage circuit will be activated when its internal feedback circuit fails. The output voltage shall not exceed its specifications defined on Page 3 under "Protections".

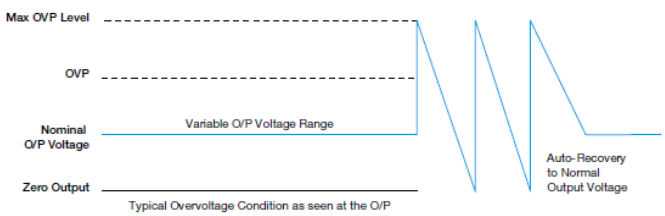

Overload & Overcurrent Protections

The power supply's Overload (OLP) and Over current (OCP) Protections will be activated when output current exceeds 120% of I_O (Max load). In such occurrence, the V_O will start to droop and once the power supply has reached its maximum power limit, the protection is activated and the power supply will go into "Hiccup mode" (Auto-Recovery). The power supply will recover once the fault condition of the OLP and OCP is removed and I_O is back within the specifications.

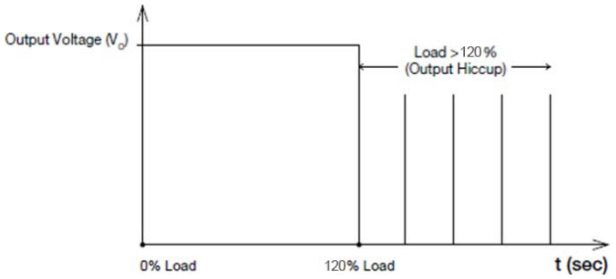

Additionally, if the I_O is < 120% but > 100% for a prolong period of time (depending on the load), the Over Temperature Protection (OTP) will be activated due to high temperature on critical components. The power supply will then go into "Hiccup mode" until power supply cool down.

Over Temperature Protection

As mentioned above, the power supply also has Over Temperature Protection (OTP). This is activated when the overload condition persists for an extended duration and the output current is below the overload trigger point but > 100% load. In the event of a higher operating condition at 100% load, the power supply will run into OTP when the surrounding air temperature is > 75°C. When activated, the output voltage will go into bouncing mode until the operating surrounding temperature drops to 50°C or output capacity is reduced as recommended in the de-rating graph.

Short Circuit Protection

The power supply's output OLP/OCP function also provides protection against short circuits. When a short circuit is applied, the output current will operate in "Hiccup mode", as shown in the illustration in the OLP/OCP section on this page. The power supply will return to normal operation after the short circuit is removed.

PMC Panel Mount Power Supply

24V 300W 1 Phase / PMC-24V300W1BA

Operating Mode

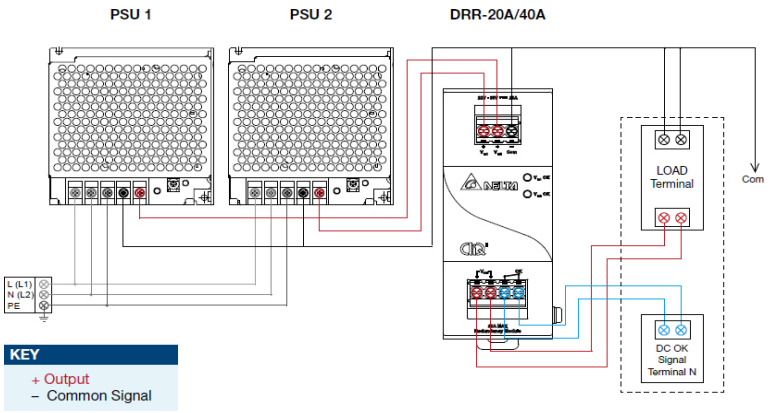

Fig. 3 Redundancy / Parallel Operation Connection Diagram

■ Redundancy Operation

In order to ensure proper redundancy operation for the power supply unit (PSU), ensure that the output voltage difference between the two units is kept at 0.45~0.50V for 24V supplies. Follow simple steps given below to verify:

Step 1.
Measure output voltage of PSU 1 and PSU 2. If PSU 1 is the master unit, then V_O of PSU 1 must be higher than PSU 2.

In order to set the output voltage, connect the power supply to 50% load and set the PSU 1 and PSU 2 output voltage.

Step 2.
Connect the right DRR module, 20A as per the system requirement to the power supply units PSU 1 and PSU 2 at V_{in} 1 & V_{in} 2 respectively.

Step 3.
Connect the system load from V_{out}. Please note that output voltage V_{out} from DRR module will be = V_O (output voltage of power supply) – V_{drop}* (in DRR module).

■ Parallel Operation

These DRR modules can also be used for Parallel function in order to increase the output power by N+1 (e.g. 2.5A + 2.5A = 5A or 2.5A + 2.5A + 2.5A = 7.5A) or current sharing, and thus increasing the power supply and system reliability. Though the PMC-24V300W1BA is not designed for current sharing, a good current sharing between two power supplies can be achieved by following simple steps as below (Refer to Fig. 3 for the Connection Diagram).

Step 1.
Set output load condition for both supplies at 50% and measure the output voltages.

Step 2.
Adjust output voltages to the same level or within ±25mV difference.

Step 3.
Connect PSU 1 and PSU 2 with the DRR-20A module and measure at V_{in} 1 & V_{in} 2 to verify the voltage difference. Ensure the voltages are within ±25mV.

Step 4.
Output voltage from DRR module V_{out} will be = V_O (output voltage of power supply) – V_{drop}* (in DRR module).

***V_{drop} will vary from 0.60V to 0.90V (Typical 0.65V) depending on the load current and surrounding air temperature.**

PMC Panel Mount Power Supply
24V 300W 1 Phase / PMC-24V300W1BA

Others

Delta RoHS Compliant

Restriction of the usage of hazardous substances

The European directive 2011/65/EU limits the maximum impurity level of homogeneous materials such as lead, mercury, cadmium, chrome, polybrominated flame retardants PBB and PBDE for the use in electrical and electronic equipment. RoHS is the abbreviation for “Restriction of the use of certain hazardous substances in electrical and electronic equipment”.

This product conforms to this standard.

PFC – Norm EN 61000-3-2

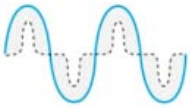

Line Current harmonic

Typically, the input current waveform is not sinusoidal due to the periodical peak charging of the input capacitor. In industrial environment, complying with EN 61000-3-2 is only necessary under special conditions. Complying to this standard can have some technical drawbacks, such as lower efficiency as well as some commercial aspects such as higher purchasing costs, Frequently, the user does not profit form fulfilling this standard, therefore, it is important to know whether it is mandatory to meet this standard for a specific application.

This product conforms to this standard.