PMC Panel Mount Power Supply

24V 600W 1 Phase / PMC-24V600W1BA



PMC

Highlights & Features

- Universal AC input range
- High PF > 0.99 @ 115Vac
- Power Boost of 200% for 5 seconds
- Meet Surge Immunity IEC 61000-4-5, Level 4 (CM: 4kV, DM: 2kV)
- Built-in fan speed control and fan lock protection
- Wide operating temperature range -20°C to 70°C
- Overvoltage / Overcurrent / Over Temperature / Short Circuit Protections

Safety Standards

CB Certified for worldwide use

Model Number: PMC-24V600W1BA
Unit Weight: 1.60 kg
Dimensions (L x W x D): 215 x 120 x 61 mm

General Description

The PMC-24V600W1BA has a power rating of 600W with 24V output voltage. The product features Power Boost of 200% (up to 1200W) for 5 seconds and built-in fan speed control with fan lock protection. The PMC-24V600W1BA accepts the full universal AC input range and have been approved for major safety standards like IEC/EN/UL 60950-1 (ITE), EMI according to EN 55011 (Industrial, scientific and medical (ISM) radio-frequency equipment) and EMS according to EN 61000-6-2 (Immunity for industrial environments).

Model Information

PMC Panel Mount Power Supply

Model Number	Input Voltage Range	Output Voltage	Output Current
PMC-24V600W1BA	85-264Vac (120-370Vdc)	24Vdc	25.0A

Model Numbering

PM	C –	24V	600W	1	B	A
Panel Mount	Product Type C – Enclosed	Output Voltage	Output Power	Single Phase	With PFC	Terminal Block Connector

All parameters are specified at 25°C ambient unless otherwise noted.

PMC Panel Mount Power Supply
24V 600W 1 Phase / PMC-24V600W1BA

Specifications

Input Ratings / Characteristics

Nominal Input Voltage	100-240Vac
Input Voltage Range	85-264Vac (Refer to the Output De-rating VS. Input Voltage graph)
Nominal Input Frequency	50-60Hz
Input Frequency Range	47-63Hz
Nominal DC Input Voltage	142-340Vdc
DC Input Voltage Range*	120-370Vdc (Refer to the Output De-rating VS. Input Voltage graph)
Input Current	< 6.50A @ 115Vac, < 3.20A @ 230Vac
Efficiency at 100% Load	> 86.0% @ 115Vac, > 89.0% @ 230Vac
Max Inrush Current	< 20A @ 115Vac, < 40A @ 230Vac
Power Factor	> 0.99 @ 115Vac, > 0.94 @ 230Vac
Leakage Current	< 1.5mA

*Fulfills tested conditions

Output Ratings / Characteristics

Nominal Output Voltage	24Vdc
Output Voltage Tolerance	± 2% (initial set point tolerance from factory)
Output Voltage Adjustment Range	21.6-26.4Vdc
Output Current	25.0A (continuously operating at 24V) 50.0A (Power Boost for 5 seconds at 24V, refer to the details in the Functions section)
Output Power	600W (continuously operating) 1200W (Power Boost for 5 seconds, refer to the details in the Functions section)
Line Regulation	< 0.4% typ. (@ 115 & 240Vac input, 100% load)
Load Regulation	< 0.625% typ. (@115 & 240Vac input, 100% load)
PARD (20MHz)	< 180mVpp @ 0°C to 50°C, < 240mVpp @ -20°C to 0°C
Rise Time	< 50ms @ 115Vac & 230Vac (100% load)
Start-up Time	< 800ms @ 230Vac (100% load)
Hold-up Time	> 20ms @ 115Vac & 230Vac (100% load)
Dynamic Response (Overshoot & Undershoot O/P Voltage)	± 5% @ 0-50% load and 50-100% load
Start-up with Capacitive Loads	10,000μF Max

PMC Panel Mount Power Supply

24V 600W 1 Phase / PMC-24V600W1BA

Mechanical

Case Chassis / Cover		SECC
Dimensions (L x W x D)		215 x 120 x 61 mm
Unit Weight		1.60 kg
Indicator		Green LED (DC OK)
Cooling System		Forced Cooling (Built-in Fan)
Terminal	Input	3 Pins (Rated 300V/20A)
	Output	4 Pins (Rated 300V/25A)
Wire		AWG 14-12
Noise (1 Meter from power supply)		Sound Pressure Level (SPL) < 52dBA

Environment

Surrounding Air Temperature	Operating	-20°C to +70°C
	Storage	-20°C to +75°C
Power De-rating		> 50°C de-rate power by 2.5% / °C < 115Vac de-rate power by 0.67% / 1V
Operating Humidity		20-90% RH
Operating Altitude		3,000 Meters
Shock Test (Non-Operating)		IEC 60068-2-27, 30G (300m/S²) for a duration of 18ms, 1 times per direction, 2 times in total
Vibration (Non-Operating)		IEC 60068-2-6, 10Hz to 150Hz @ 50m/S² (5G peak); 20 min per axis for all X, Y, Z direction
Pollution Degree		2

Protections

Overvoltage	27.6-33.6V, SELV Output, Latch-off Mode
Overload / Overcurrent	> 180% of rated load @ V_{in} ≥115Vac, Hicc-up Mode, Non-Latching (Auto-Recovery)
Over Temperature	< 70°C Surrounding Air Temperature @ 100% load, Latch-off Mode
Short Circuit	Hicc-up Mode, Non-Latching (Auto-Recovery when the fault is removed)
Fan Lock	Latch-off Mode
Protection Against Shock	Class I with PE* connection

*PE: Primary Earth

Reliability Data

MTBF	> 300,000 hrs. as per Telcordia SR-332
Expected Cap Life Time	10 years (115Vac & 230Vac, 50% load @ 40°C)

PMC Panel Mount Power Supply

24V 600W 1 Phase / PMC-24V600W1BA

Safety Standards / Directives

Electrical Safety		SIQ Bauart to EN 60950-1, UL/cUL recognized to UL 60950-1 and CSA C22.2 No. 60950-1, CB scheme to IEC 60950-1
CE		In conformance with EMC Directive 2004/108/EC and Low Voltage Directive 2006/95/EC
Material and Parts		RoHS Directive 2011/65/EU Compliant
Galvanic Isolation	Input to Output	3.0KVac
	Input to Ground	1.5KVac
	Output to Ground	0.5KVac

EMC

EMC / Emissions		CISPR 22, EN 55022, CISPR 11, EN 55011, FCC Title 47, VCCI*: Class B
Immunity to		EN 55024, EN 61000-6-2
Electrostatic Discharge	IEC 61000-4-2	Level 3 Criteria A[1)] Air Discharge: 8kV Contact Discharge: 6kV
Radiated Field	IEC 61000-4-3	Level 3 Criteria A[1)] 80MHz-1GHz, 10V/M, 80% modulation (1KHz) 1.4GHz-2GHz, 3V/M, 80% modulation (1KHz) 2GHz-2.7GHz, 1V/M, 80% modulation (1KHz)
Electrical Fast Transient / Burst	IEC 61000-4-4	Level 3 Criteria A[1)] 2kV
Surge	IEC 61000-4-5	Level 4 Criteria A[1)] Common Mode[2)]: 4kV Differential Mode[3)]: 2kV
Conducted	IEC 61000-4-6	Level 3 Criteria A[1)] 150kHz-80MHz, 10Vrms
Power Frequency Magnetic Fields	IEC 61000-4-8	Criteria A[1)] 30A/Meter
Voltage Dips	IEC 61000-4-11	100% dip; 1 cycle (20ms); Self Recoverable
Harmonic Current Emission		IEC/EN 61000-3-2, Class A
Voltage Fluctuation and Flicker		IEC/EN 61000-3-3

*Fulfills tested conditions

1) Criteria A: Normal performance within the specification limits
2) Asymmetrical: Common mode (Line to earth)
3) Symmetrical: Differential mode (Line to line)

PMC Panel Mount Power Supply

24V 600W 1 Phase / PMC-24V600W1BA

Block Diagram

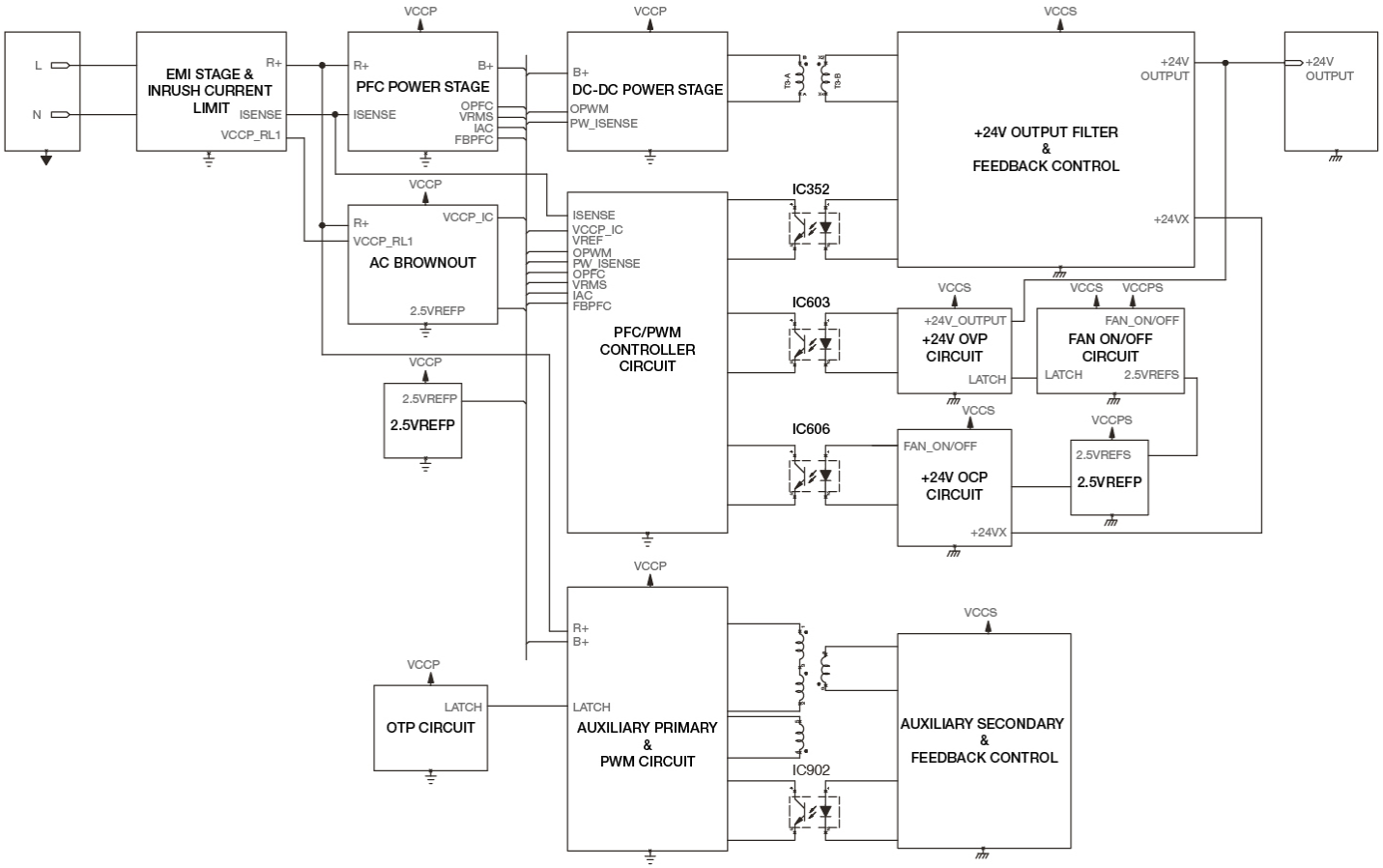

Device Description

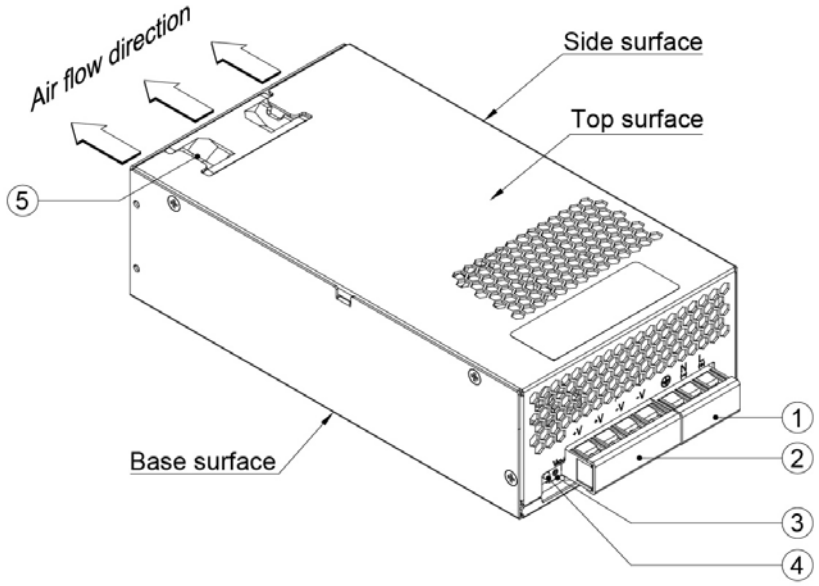

1) Input terminal block connector
2) Output terminal block connector
3) DC voltage adjustment potentiometer
4) DC OK control LED (Green)
5) DC Fan

All parameters are specified at 25°C ambient unless otherwise noted.

PMC Panel Mount Power Supply
24V 600W 1 Phase / PMC-24V600W1BA

Dimensions

L x W x D: 215 x 120 x 61 mm

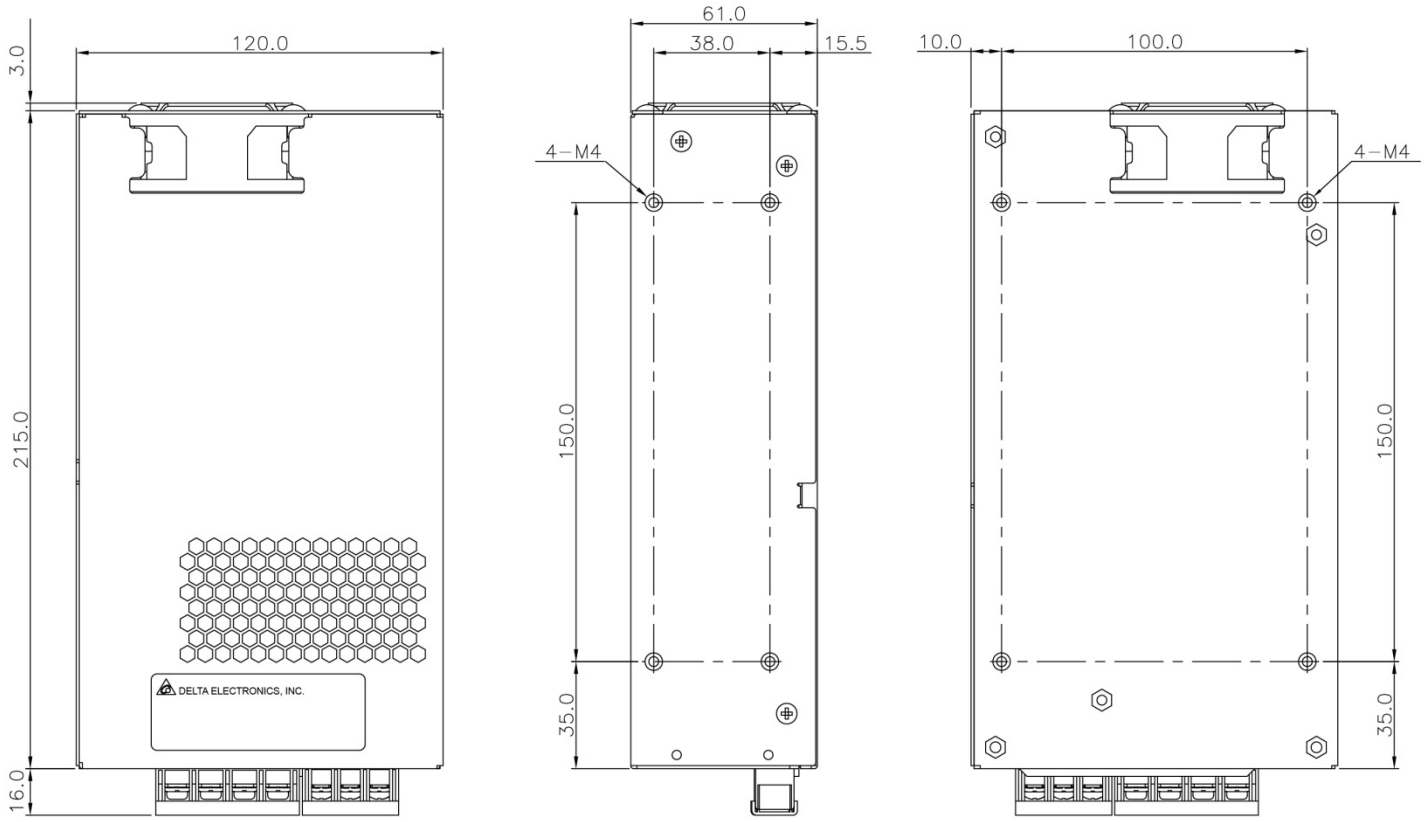

Engineering Data

De-rating

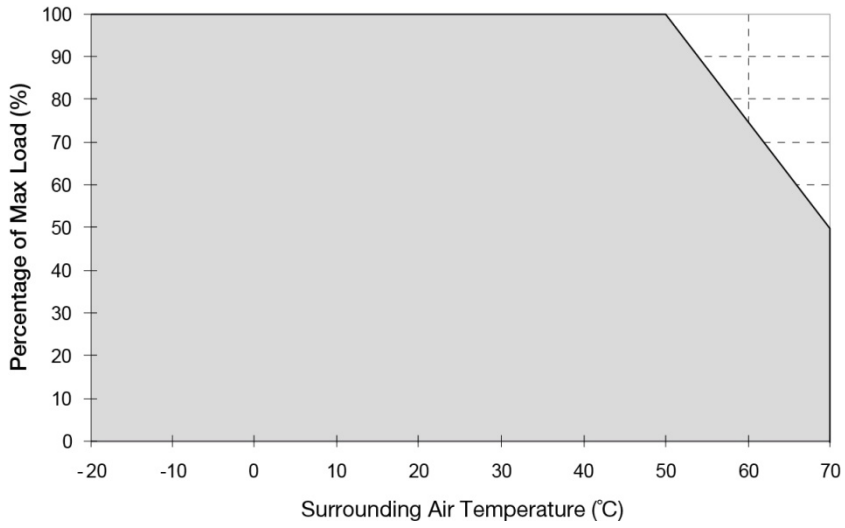

Fig. 1 De-rating for Vertical and Horizontal Mounting Orientation
> 50°C de-rate power by 2.5% / °C

Note

1. Power supply components may degrade, or be damaged, when the power supply is continuously used outside the shaded region, refer to the graph shown in Fig. 1.
2. In the event of a higher operating condition at 100% load, the power supply will run into OTP when the surrounding air temperature is higher than the operating temperature. When activated, the output voltage will go into latch mode until the mains is reapplied and the surrounding air temperature drops to its normal operating temperature.
3. In order for the device to function in the manner intended, it is also necessary to keep a safety distance of 50mm with adjacent units while the device is in operation.
4. Depending on the surrounding air temperature and output load delivered by the power supply, the device can be very hot!
5. If the device has to be mounted in any other orientation, please do not hesitate to contact **info@deltapsu.com** for more details.

PMC Panel Mount Power Supply
24V 600W 1 Phase / PMC-24V600W1BA

Output De-rating VS. Input Voltage

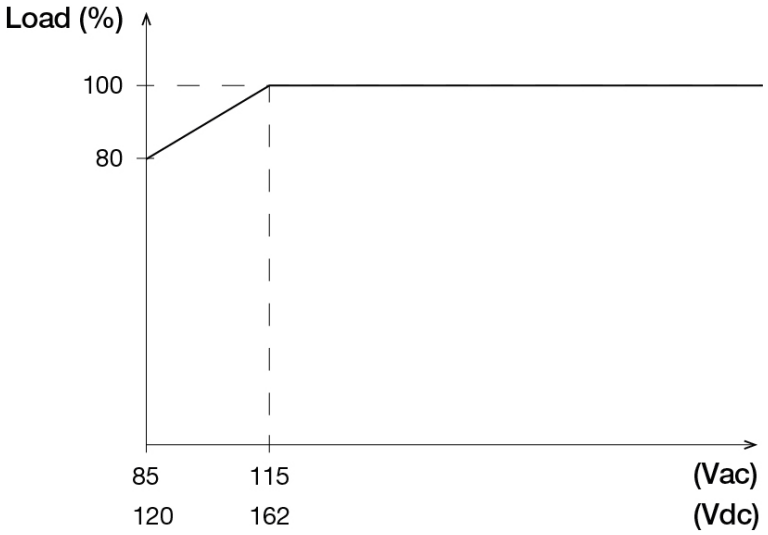

- Output de-rating is required at 85Vac to 115Vac or 120Vdc to 162Vdc.

Assembly & Installation

Ⓐ Mounting holes for power supply assembly onto the mounting surface.
The power supply shall be mounted on minimum 4 mounting holes using M4 screw minimum 5mm length.
Ⓑ Input / Output Connector
Ⓒ This surface belongs to customer's end system or panel where the power supply is mounted.

Side Mounting	Base Mounting (Horizontal)	Base Mounting (Vertical)	Base Mounting (Vertical)
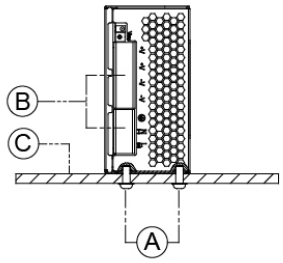	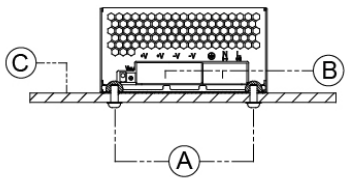	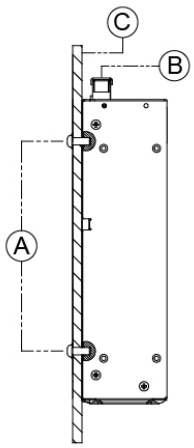	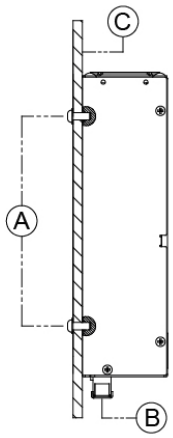

Fig. 2 Mounting Orientation

– Use flexible cable (stranded or solid) of AWG No. 14-12. The torque at the Input connector shall not exceed 11.98Kgf.cm. The torque at the Output connector shall not exceed 16.59Kgf.cm. The insulation stripping length should not exceed 0.275" or 7mm.

PMC Panel Mount Power Supply
24V 600W 1 Phase / PMC-24V600W1BA

Installation of Mounting Accessories

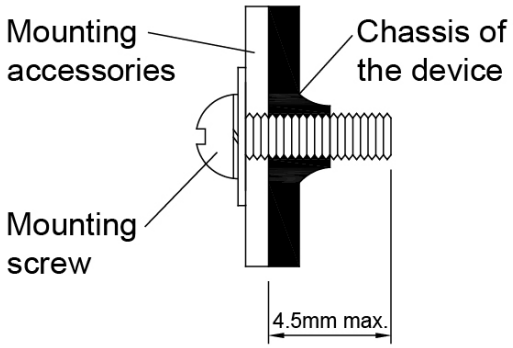

- Only use M4 screw ≤ 4.5mm through the base mounting holes. This is to keep a safety distance between the screw and internal components.
- Recommended mounting tightening torque: 4~8Kgf.cm.

Safety Instructions

– To ensure sufficient convection cooling, always maintain a safety distance of ≥ 50mm from all ventilated surfaces while the device is in operation.
– The device is not recommended to be placed on low thermal conductive surface, for example, plastics.
– Note that the enclosure of the device can become very hot depending on the ambient temperature and load of the power supply. Do not touch the device while it is in operation or immediately after power is turned OFF. Risk of burning!
– Do not touch the terminals while power is being supplied. Risk of electric shock.
– Prevent any foreign metal, particles or conductors from entering the device through the openings during installation. It may cause: Electric shock; Safety Hazard; Fire; Product failure
– Warning: When connecting the device, secure Earth connection before connecting L and N. When disconnecting the device, remove L and N connections before removing the Earth connection.

PMC Panel Mount Power Supply
24V 600W 1 Phase / PMC-24V600W1BA

Functions

Start-up Time

The time required for the output voltage to reach 90% of its set value, after the input voltage is applied.

Rise Time

The time required for the output voltage to change from 10% to 90% of its set value.

Hold-up Time

Hold up time is the time when the AC input collapses and output voltage retains regulation for a certain period of time. The time required for the output to reach 95% of its set value, after the input voltage is removed.

■ **Graph illustrating the Start-up Time, Rise Time, and Hold-up Time**

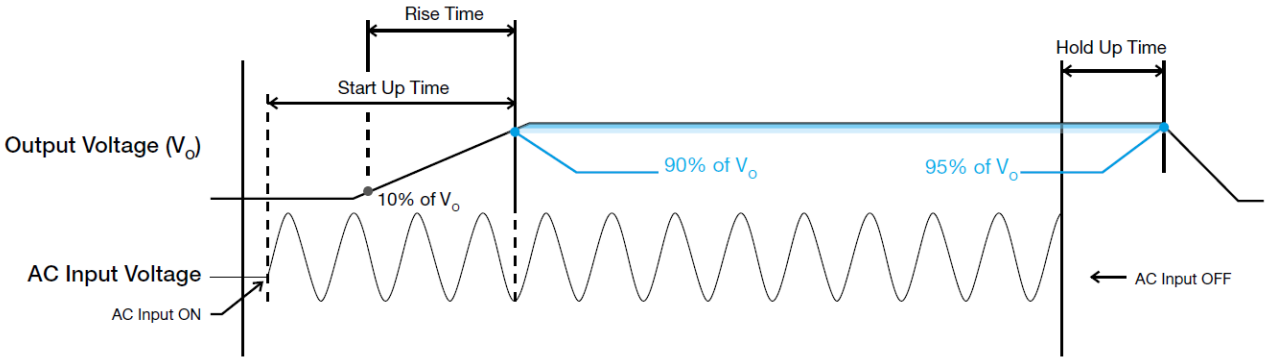

Inrush Current

Inrush current is the peak, instantaneous, input current measured and, occurs when the input voltage is first applied. For AC input voltages, the maximum peak value of inrush current will occur during the first half cycle of the applied AC voltage. This peak value decreases exponentially during subsequent cycles of AC voltage.

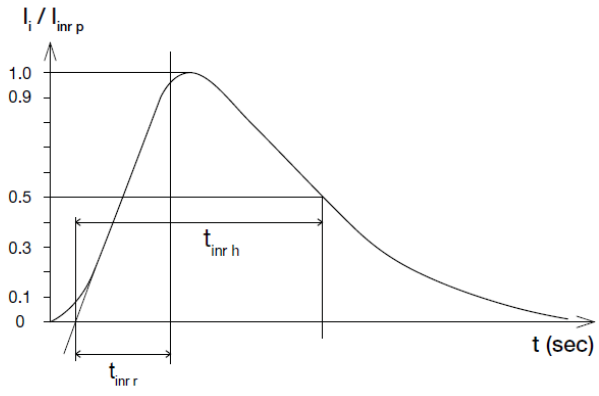

Dynamic Response

The power supply output voltage will remains within ±5% of its steady state value, when subjected to a dynamic load from 0% to 50% and 50% to 100% of its rated current.

■ **0% to 50% Load**

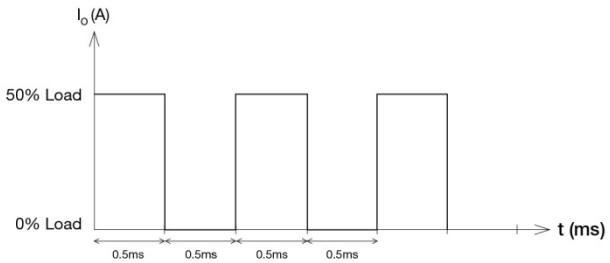

■ **50% to 100% Load**

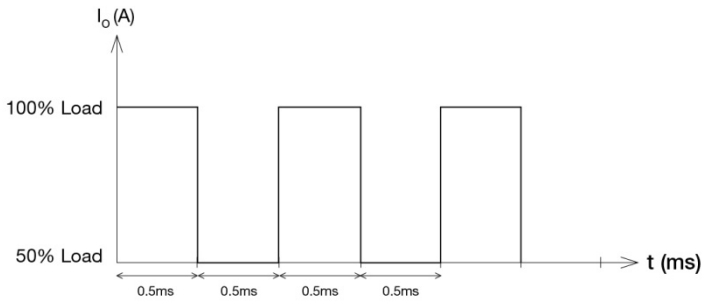

All parameters are specified at 25°C ambient unless otherwise noted.
www.DeltaPSU.com (June 2013, Rev. 00)

PMC Panel Mount Power Supply
24V 600W 1 Phase / PMC-24V600W1BA

Power Boost

Power Boost is the reserve power available constantly that allows reliable startup to support sudden and short spike of loads with high inrush current typically during turn on to remove the need of more expensive higher rated power supply unit. After the output has reached its steady state set value, the power supply can support surge loads with a higher short-term power demand up to 200% of maximum rated load (I_O Max), for a maximum duration of 5 seconds. The Power Boost is also available to repeatedly basis with according to the condition of an average (R.M.S) output power shall not exceed continuous operating condition or refer to duty cycle calculation below.

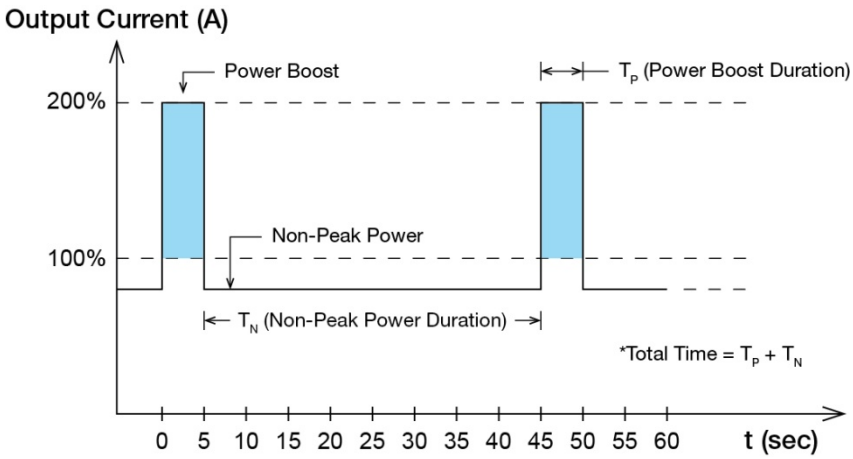

$$Duty\ cycle\ (\%) = \frac{T_P}{Total\ Time}$$

$$Average\ Output\ Power\ (P_{Avg}) = \frac{(Power\ Boost\ \times T_P) + (Non\text{-}Peak\ Power \times T_N)}{Total\ Time}$$

OR

$$Non\text{-}Peak\ Power = \frac{(P_{Avg} \times Total\ Time) - (Power\ Boost\ \times T_P)}{T_N}$$

■ **An example of Power Boost and Average Output Power**

Power Boost	Peak Power (W_P)	Power Boost Duration (T_P)	Duty Cycle	Non-Peak Power (W_N)	Non-Peak Power Duration (T_N)	Total Time (T)
200%	1200	5 sec	10%	533	45 sec	50 sec
200%	1200	5 sec	35%	277	9.3 sec	14.3 sec
180%	1080	10 sec	20%	480	40 sec	50 sec
180%	1080	10 sec	35%	348	19 sec	29 sec
150%	900	15 sec	30%	471	35 sec	50 sec
150%	900	15 sec	35%	438	28 sec	43 sec
124%	744	20 sec	40%	504	30 sec	50 sec

It is not recommended to prolong the duration of Power Boost to be longer than the specified duty cycle calculation, this may cause damage to the PSU.

PMC Panel Mount Power Supply
24V 600W 1 Phase / PMC-24V600W1BA

Overload & Overcurrent Protections

The power supply's Overload (OLP) and Overcurrent (OCP) Protections will be activated when output current exceeds 180% of I_O (Max load). In such occurrence, the V_O will start to droop and once the power supply has reached its maximum power limit, the protection is activated and the power supply will go into "Hiccup mode" (Auto-Recovery). The power supply will recover once the fault condition of the OLP and OCP is removed and I_O is back within the specifications.

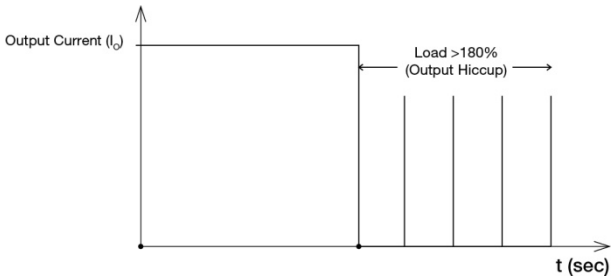

It is not recommended to prolong the duration of I_O when it is <180% but >100%, since it may cause damage to the PSU.

Short Circuit Protection

The power supply's output OLP/OCP function also provides protection against short circuits. When a short circuit is applied, the output current will operate in "Hiccup mode", as shown in the illustration in the OLP/OCP section on this page. The power supply will return to normal operation after the short circuit is removed.

Overvoltage Protection

The power supply's overvoltage circuit will be activated when its internal feedback circuit fails. The output voltage shall not exceed its specifications defined on Page 3 under "Protections".

Overvoltage Protection (OVP) is Latch Mode.

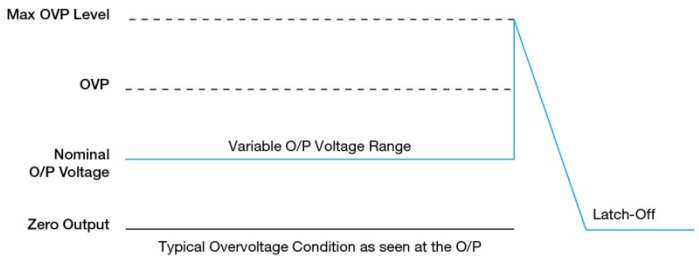

Over Temperature Protection

As mentioned above, the power supply also has Over Temperature Protection (OTP). In the event of a higher operating temperature at 100% load, the power supply will run into OTP when the operating temperature is beyond what is recommended in the de-rating graph. When activated, the output voltage will go into latch mode until the mains is reapplied and the temperature drops to its normal operating temperature as recommended in the de-rating graph.

PMC Panel Mount Power Supply
24V 600W 1 Phase / PMC-24V600W1BA

Operating Mode

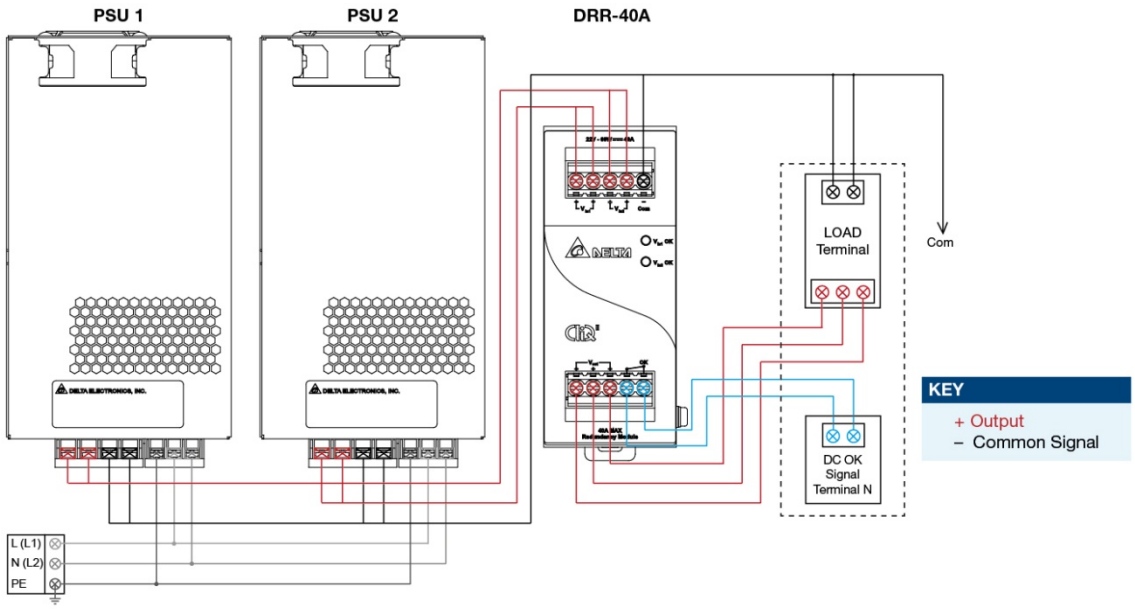

Fig. 3 Redundancy / Parallel Operation Connection Diagram

■ **Redundancy Operation**

In order to ensure proper redundancy operation for the power supply unit (PSU), ensure that the output voltage difference between the two units is kept at 0.45~0.50V for 24V supplies. Follow simple steps given below to verify:

Step 1.
Measure output voltage of PSU 1 and PSU 2. If PSU 1 is the master unit, then V_O of PSU 1 must be higher than PSU 2. In order to set the output voltage, connect the power supply to 50% load and set the PSU 1 and PSU 2 output voltage.

Step 2.
Connect the right DRR module, 40A as per the system requirement to the power supply units PSU 1 and PSU 2 at V_{in} 1 & V_{in} 2 respectively.

Step 3.
Connect the system load from V_{out}. Please note that output voltage V_{out} from DRR module will be = V_O (output voltage of power supply) – V_{drop}* (in DRR module).

■ **Parallel Operation**

These DRR modules can also be used for Parallel function in order to increase the output power by N+1 (e.g. 2.5A + 2.5A = 5A or 2.5A + 2.5A + 2.5A = 7.5A) or current sharing, and thus increasing the power supply and system reliability. Though the PMC-24V600W1BA is not designed for current sharing, a good current sharing between two power supplies can be achieved by following simple steps as below (Refer to Fig. 3 for the Connection Diagram).

Step 1.
Set output load condition for both supplies at 50% and measure the output voltages.

Step 2.
Adjust output voltages to the same level or within ±25mV difference.

Step 3.
Connect PSU 1 and PSU 2 with the DRR-40A module and measure at V_{in} 1 & V_{in} 2 to verify the voltage difference. Ensure the voltages are within ±25mV.

Step 4.
Output voltage from DRR module V_{out} will be = V_O (output voltage of power supply) – V_{drop}* (in DRR module).

*V_{drop} will vary from 0.60V to 0.90V (Typical 0.65V) depending on the load current and surrounding air temperature.

PMC Panel Mount Power Supply
24V 600W 1 Phase / PMC-24V600W1BA

Others

Delta RoHS Compliant

Restriction of the usage of hazardous substances

The European directive 2011/65/EU limits the maximum impurity level of homogeneous materials such as lead, mercury, cadmium, chrome, polybrominated flame retardants PBB and PBDE for the use in electrical and electronic equipment. RoHS is the abbreviation for “Restriction of the use of certain hazardous substances in electrical and electronic equipment”.

This product conforms to this standard.

PFC – Norm EN 61000-3-2



Line Current Harmonic content

Typically, the input current waveform is not sinusodial due to the periodical peak charging of the input capacitor. In industrial environment, complying with EN 61000-3-2 is only necessary under special conditions. Complying to this standard can have some technical drawbacks, such as lower efficiency as well as some commercial aspects such as higher purchasing costs. Frequently, the user does not profit from fulfilling this standard, therefore, it is important to know whether it is mandatory to meet this standard for a specific application.