960W AC/DC 3Ø Input Ultra Slim Industrial DIN Rail Power XTR-960 series

User's Manual
Click Me



(XTR-960-xx)



(XTR-960-xxLA)



(XTR-960-xxPI)

(GL type) (Applying)
LISTED Class 1, Div. 2
LISTED UL61010
BS EN/EN62368-1 BS EN/EN61558-1 BS EN/EN61010-1
IEC62368-1 IEC61558-1 IEC61010-1
(Note.8)
IS13252 (By request) Note.9
KC62368-1 (By request)
CNS15598-1
GB4943.1
TPTC004

Automate Industrial Security Network Telecom

Features

- Three-Phase 320 ~ 600Vac wide range input (Dual phase operation possible)
- Global certificates in multi-fields(ITE 62368-1,Industrial 61558-1/-2-16,61010) & Marine DNV,SEMI47,C1D2 HazLoc approved
- 96mm Ultra slim width
- High efficiency up to 96% and no load power dissipation<3.1W by R.C.
- 200% Peak Power capability
- Built-in constant current limiting circuit
- Current sharing up to 3840W(3+1) for parallel use
- Protections: Short circuit / Overload / Over voltage / Over temperature
- Fanless design, cooling by free air convection
- Over voltage category III (OVC III)
- -40~+85℃ wide range operation temperature (>+60℃ derating)
- Operating altitude up to 5000 meters
- Built-in Remote ON/OFF Control and DC OK relay contact
- Ultra low inrush current < 10A
- Built-in ORing FET
- Tool free terminal block (LA type)
- Conformal coating
- Can be installed on DIN Rail TS-35/7.5 or 15
- 5 years warranty

Applications

- Industrial control system
- Semiconductor fabrication equipment
- Factory automation
- Electro-mechanical apparatus

GTIN CODE

MW Search: https://www.meanwell.com/serviceGTIN.aspx

Description

The XTR-960 series is a 960W AC/DC 3Ø 320~600Vac input ultra slim industrial high-reliability DIN rail power. Key features of this series include a narrow 96 mm casing, optimizing system installation space, it boasts a maximum efficiency of 96% and a low standby power consumption <3.1W by remote control for energy savings and carbon reduction. It provides constant current with up to 200% peak power; fanless design , ultra-wide operating temperature range of -40 to +85℃ (up to +60℃ at full load); OVCIII compliance; parallel function capability up to 3840W; ultra-low inrush current of <10A; built-in Remote Control ,DC OK and ORing FET; internal PCB coating offers basic moisture and dust protection, and it has multiple terminal blocks for selection.With comprehensive protection functions, complete safety certifications, and a 5-years warranty, the XTR-960 series is a compact, high-performance, and highly reliable DIN rail power supply.

Model Encoding

XTR - 960 - 24 □ ○

- Mount bracket(Blank/GL)
- Terminal type
- Output voltage(24V/36V/48V)
- Output wattage
- Series name

Terminal Type Options			Note
Blank	Screw Terminal		In stock
LA	Lever-Actuated		In stock
PI	Push In		In stock

960W AC/DC 3Ø Input Ultra Slim Industrial DIN Rail Power XTR-960 series

Specification			XTR-960-24□○	XTR-960-36□○	XTR-960-48□○
			□=Blank, LA, PI ○=Blank, GL		
OUTPUT					
DC VOLTAGE			24V	36V	48V
RATED CURRENT			40A	26.66A	20A
CURRENT RANGE			0 ~ 40A	0 ~ 26.66A	0 ~ 20A
RATED POWER			960W	959.76W	960W
PEAK	CURRENT(5 sec.)		80A	53.3A	40A
	POWER(5 sec.)		1920W	1918.8W	1920W
RIPPLE & NOISE (max.)		Note.2	120mVp-p	150mVp-p	150mVp-p
VOLTAGE ADJ. RANGE			24 ~ 29V	36 ~ 42V	48 ~ 55V
VOLTAGE TOLERANCE		Note.3	±1.0%	±1.0%	±1.0%
LINE REGULATION			±0.5%	±0.5%	±0.5%
LOAD REGULATION			±1.0%	±1.0%	±1.0%
SETUP, RISE TIME			800ms, 60ms/400Vac 600ms, 60ms/500Vac at full load		
HOLD UP TIME (Typ.)			20ms / 400Vac 20ms / 500Vac at full load		
INPUT					
VOLTAGE RANGE		Note.4	Three-Phase 320 ~ 600Vac (Dual phase operation possible) 450 ~ 800Vdc		
NO LOAD POWER CONSUMPTION (Typ.)	Remote Power OFF		3.1W/400Vac	3.1W/400Vac	3.1W/400Vac
	Remote Power ON		6.5W/400Vac	6.5W/400Vac	6.5W/400Vac
FREQUENCY RANGE			47 ~ 63Hz		
POWER FACTOR (Typ.)			PF≧0.92/400Vac PF≧0.9/500Vac at full load		
EFFICIENCY (Typ.)			95%	95.5%	96%
AC CURRENT (Typ.)			2A/400Vac 1.4A/500Vac		
INRUSH CURRENT (Typ.)			COLD START 10A/500Vac		
LEAKAGE CURRENT			<3.5mA / 530Vac		
PROTECTION					
OVERLOAD			105%~200% rated output power for more than 5 sec then constant current limiting without shutdown at rate current when Vo=30%~100%		
			Hiccup mode when Vo<30% rated voltage		
OVER VOLTAGE			30 ~ 35V	43 ~ 50V	56 ~ 65V
			Protection type : Shut down o/p voltage, re-power on to recover		
OVER TEMPERATURE			Shut down o/p voltage, recovers automatically after temperature goes down		
FUNCTION					
PARALLEL			Up to 3840W (3+1), please refer to Function Manual for more details		
DC OK RELAY CONTACT			Relay Contact Ratings (max.):30Vdc/1A, 30Vac/0.5A resistive load		
REMOTE CONTROL			Power ON : RC + ~ RC- open or keep 2~5Vdc		
			Power OFF: RC + ~ RC- short or keep<0.5Vdc		
ENVIRONMENT					
WORKING TEMP.		Note.5	-40 ~ +85℃ (Refer to "Derating Curve")		
WORKING HUMIDITY			20 ~ 95% RH non-condensing		
STORAGE TEMP., HUMIDITY			-40 ~ +85℃, 10 ~ 95% RH non-condensing		
TEMP. COEFFICIENT			±0.03%/℃ (0 ~ 60℃)		
VIBRATION			Component:10 ~ 500Hz, 2G 10min./1cycle, 60min. each along X, Y, Z axes; Mounting: Compliance to IEC60068-2-6		

960W AC/DC 3Ø Input Ultra Slim Industrial DIN Rail Power XTR-960 series

Specification	XTR-960-24□○	XTR-960-36□○	XTR-960-48□○
	□=Blank, LA, PI ○=Blank, GL		
SAFETY & EMC Note.7&8&9			
SAFETY STANDARDS	CB IEC 62368-1, IEC 61558-1/2-16, IEC 61010-1/-2-201 TUV BS EN/EN 62368-1, BS EN /EN 61558-1/-2-16, BS EN/EN 61010-1/-2-201 UL UL121201/CSA C22.2 NO.213.17 Class I, Div. 2 Group A, B, C, D Hazardous Locations T4; UL/CUL 61010-1/-2-201 CCC GB4943.1 BSMI CNS15598-1 EAC TPTC004 Marine DNV (for GL type only) SEMI F47 approved KC/BIS KC 62368-1 and BIS IS 13252 (Part 1) certified, No stock ,contact sales by request		
OVER VOLTAGE CATEGORY Note.6	IEC/EN 61558-1/-2-16 (OVC Ⅲ, altitude up to 2000m) IEC/EN/UL 61010-1/-2-201 (OVC Ⅱ, altitude up to 5000m) IEC/EN 62368-1 (OVC Ⅱ, altitude up to 5000m)		
SAFETY EXTRA-LOW VOLTAGE (SELV)	IEC/EN 61558-2-16 (SELV) IEC/EN 62368-1 (SELV/ ES1)		
WITHSTAND VOLTAGE	I/P-O/P:4.87KVac I/P-FG:2.5KVac O/P-FG:0.5KVac O/P-DC OK:0.5KVac		
ISOLATION RESISTANCE	I/P-O/P, I/P-FG, O/P-FG:>100M Ohms / 500Vdc / 25℃/ 70% RH		

EMC EMISSION

Parameter	Standard	Test Level / Note
Conducted	BS EN/EN55032(CISPR32) / BS EN/EN61204-3 / CNS15936 / KS C 9832	Class B
Radiated	BS EN/EN55032(CISPR32) / BS EN/EN61204-3 / CNS15936 / KS C 9832	Class B
Harmonic Current	BS EN/EN61000-3-2	Class A
Voltage Flicker	BS EN/EN61000-3-3	-----

EMC IMMUNITY

BS EN/EN55035 , BS EN/EN61204-3 , BS EN/EN61000-6-2:2005 , BS EN/EN IEC61000-6-2:2019,
KS C 9835,SEMI F47 tested at 200Vac

Parameter	Standard	Test Level / Note
ESD	BS EN/EN61000-4-2	Level 4, 15KV air ; Level 4, 8KV contact
Radiated Field	BS EN/EN61000-4-3	Level 3, 10V/m ; criteria A
EFT / Burst	BS EN/EN61000-4-4	Level 4, 4KV ; criteria A
Surge	BS EN/EN61000-4-5	Level 4, 2KV / Line-Line, Level 4, 4KV/ Line-Earth
Conducted	BS EN/EN61000-4-6	Level 3, 10V/m ; criteria A
Magnetic Field	BS EN/EN61000-4-8	Level 4, 30A/m ; criteria A
Voltage Dips and Interruptions	BS EN/EN61000-4-11	＞95% dip 0.5 periods, 30% dip 25 periods＞ 95% interruptions 250 periods

OTHERS			
MTBF	936.0K hrs min. Telcordia SR-332(Bellcore) ; 117.5K hrs min. MIL-HDBK-217F (25℃)		
DIMENSION	**96*125.2*132mm (W*H*D)**		
PACKING	2.18Kg ; 6pcs/14.1Kg/1.47CUFT		

NOTE

1. All parameters NOT specially mentioned are measured at 400Vac input, rated load and 25℃ of ambient temperature.
2. Ripple & noise are measured at 20MHz of bandwidth by using a 12" twisted pair-wire terminated with a 0.1 μF & 47 μF parallel capacitor.
3. Tolerance : includes set up tolerance, line regulation and load regulation.
4. Dual phase operation is allowed under certain derating to output load. Please refer to derating curves for details.
5. Installation clearances : 40mm on top, 20mm on the bottom, 5mm on the left and right side are recommended when loaded permanently with full power.
   In case the adjacent device is a heat source, 15mm clearance is recommended.
6. The ambient temperature derating of 3.5℃/1000m with fanless models and of 5℃/1000m with fan models for operating altitude higher than 2000m(6500ft).
7. The power supply is considered as an independent unit, but the final equipment still need to re-confirm that the whole system complies with the EMC directives. For guidance on how to perform these EMC tests, please refer to "EMI testing of component power supplies."
   (as available on https://www.meanwell.com//Upload/PDF/EMI_statement_en.pdf)
8. The Regulatory Compliance Mark (RCM) is applied on a voluntary basis. The equipment meets the relevant IEC or AS/NZS standards, or AS/NZS 3820 where applicable. The use of the RCM mark complies with AS/NZS 4417.1.
9. Some factory or model may not have the BIS logo, please contact your MEAN WELL sales for more information.

※ Product Liability Disclaimer ： For detailed information, please refer to https://www.meanwell.com/serviceDisclaimer.aspx

■ Block Diagram

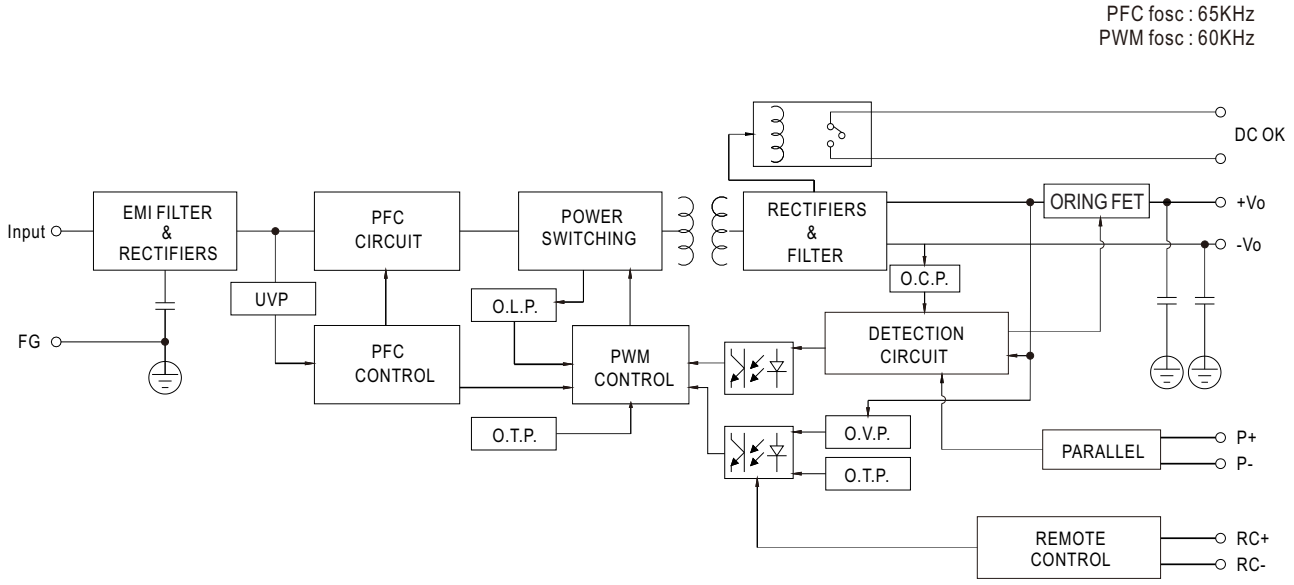

■ Derating Curve

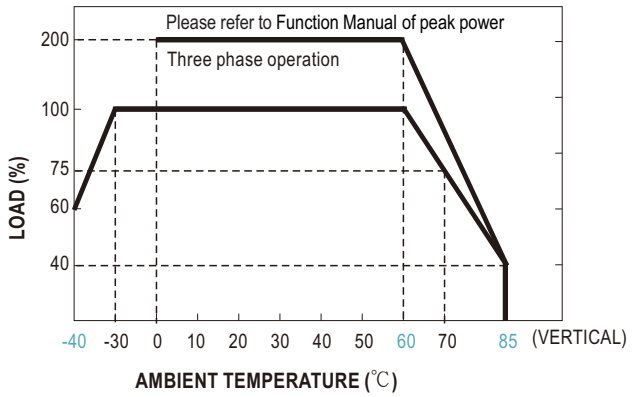

■ Output derating VS input voltage

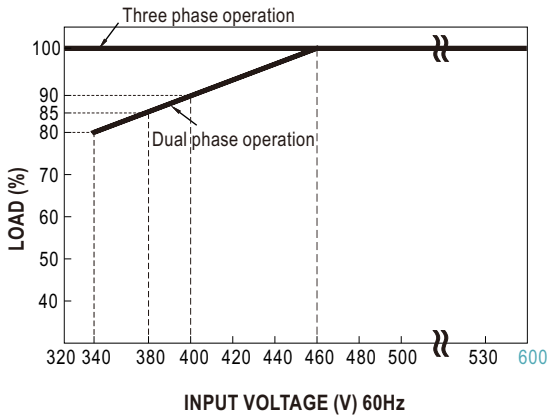

■ Peak Power

$$P_{av} = \frac{P_{pk} \times t + P_{npk} \times (T-t)}{T} \leqslant P_{rated}$$

$$Duty = \frac{t}{T} \times 100\% \leqslant 35\%$$

$t \leqslant 5$ sec

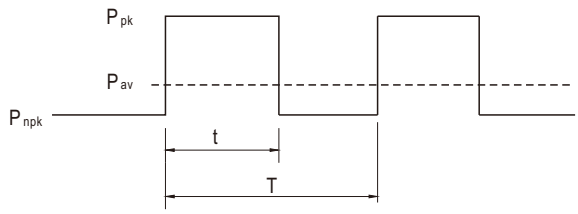

P_{av} : Average output power (W)

P_{pk} : Peak output power (W)

P_{npk} : Non-peak output power (W)

P_{rated} : Rated output power (W)

t : Peak power width (sec)

T: Period (sec)

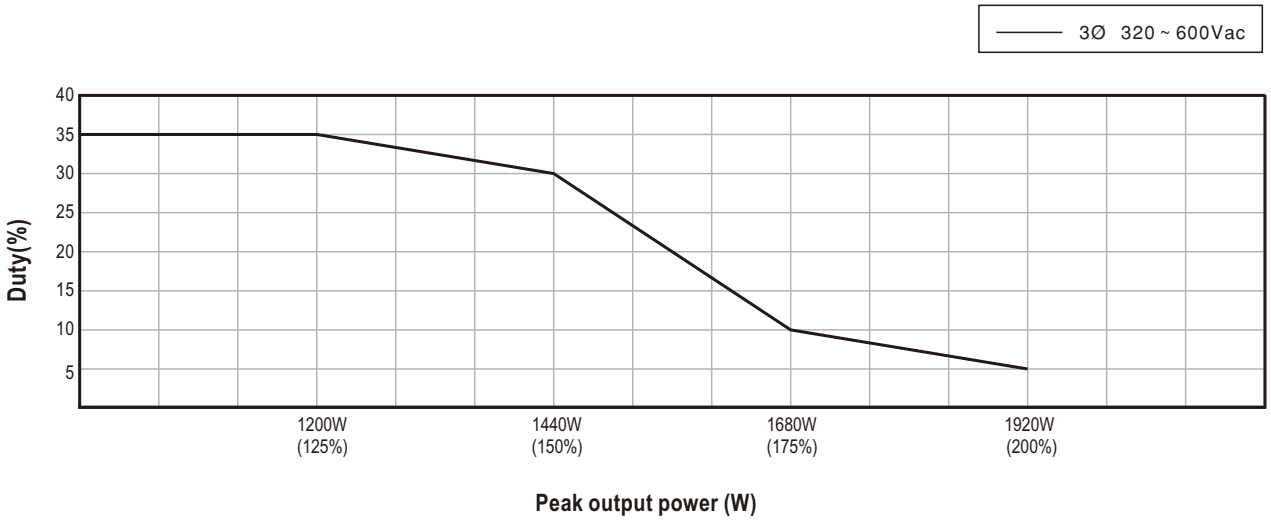

For example (24V model) :

Vin = 400Vac Duty_max = 5%

$P_{av} = P_{rated} = 960W$

$P_{pk} = 1920W$

$t \leqslant 5$ sec

$$T \geqq \frac{5 \text{ sec}}{5\%} \geqq 100\text{sec}$$

$$P_{npk} \leqslant \frac{T P_{av} - t P_{pk}}{T-t}$$

$P_{npk} \leqslant 910W$

■ Function Manual

Pin No.	Function	Description
1,2	DC OK Relay Contact	Contact close : PSU turns ON/DC_OK ; Contact open : PSU turns OFF/DC_fail; Contact ratings (max.): 30Vdc/1A ,30Vac/0.5A resistive load.
3	P+	Current sharing signal. When units are connected in parallel, the P+ pins of the units should be connected mutually to allow current balance between units.
4	P-	Current sharing signal. When units are connected in parallel, the P- pins of the units should be connected mutually to allow current balance between units. P- Signal is internally connected to -Vo.
5	RC+	Turns the output ON and OFF by electrical singal Remote power ON : Open or keep 2~5Vdc Remote power OFF: Short or keep<0.5Vdc
6	RC-	

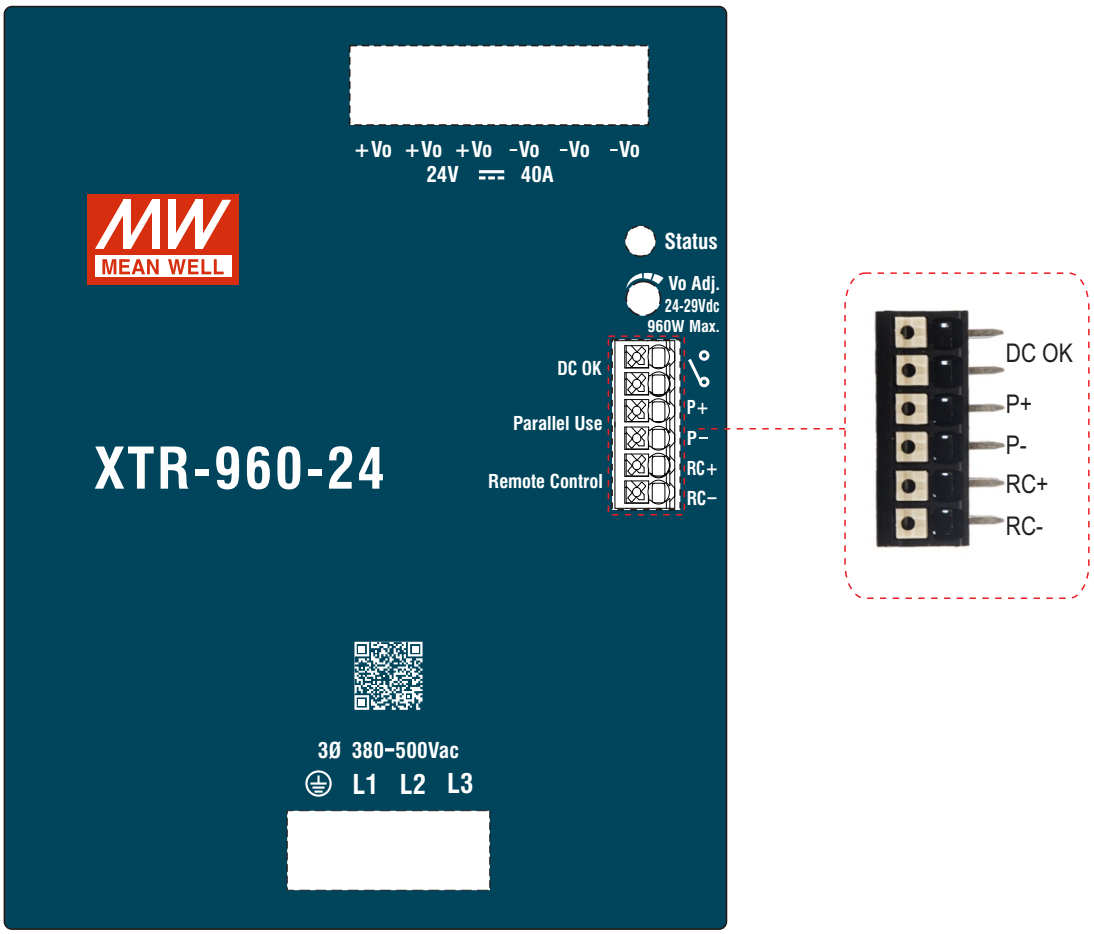

1.Parallel Use

XTR-960 has the built-in active current sharing function and can be connected in parallel, up to 4 units, to provide higher output power as exhibited below :

(1) Parallel operation is available by connecting the units shown as below (P+,P- are connected mutually in parallel).

(2) Difference of output voltages among parallel units should be less than 0.2V.

(3) The total output current must not exceed the value determined by the following equation (Output current at parallel operation)=(The rated current per unit) x (Number of unit) x 0.9.

(4) In parallel operation 4 units is the maximum, please consult the manufacture for other applications.

(5) The power supplies should be paralleled using short and large diameter wiring and then connected to the load.

(6) When in parallel operation, the minimum output load should be greater than 5% of total output load. (Min. load >5% rated current per unit x number of unit)

(7) P+ and P- lines should be twisted in pairs

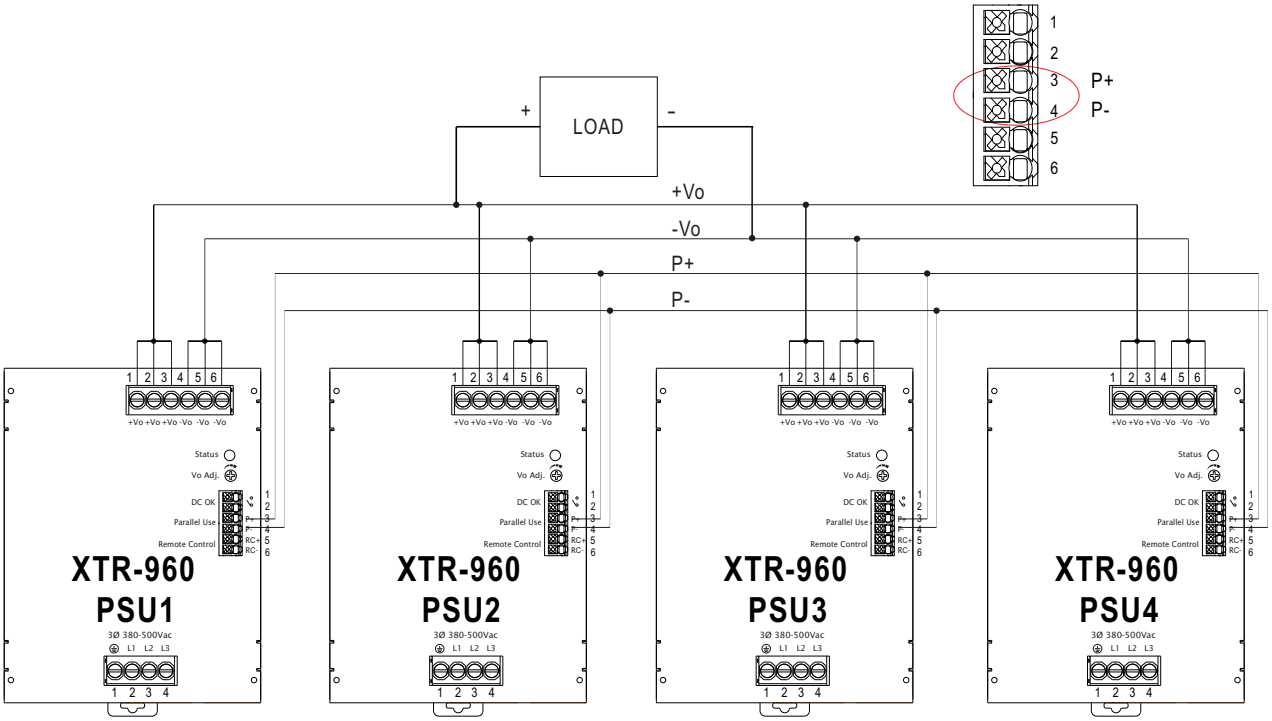

※ Please contact MEAN WELL for more details.

2.DC OK Relay Contact

Contact Close	PSU turns ON / DC OK.
Contact Open	PSU turns OFF / DC Fail.
Contact ratings (max.)	30Vdc/1A ,30Vac/0.5A resistive load.

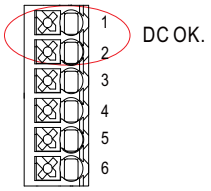

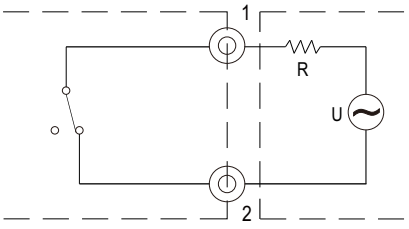

External voltage source (U) and resistor (R)
(The max. Sink is 30Vdc/1A ,30Vac/0.5A)

Internal circuit of DC_OK, via relay contact

3.Remote ON/OFF Control

The PSU can be turned ON/OFF by using the "Remote Control" function.

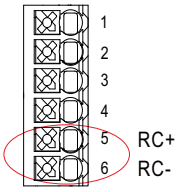

PSU Vo Status	Between RC+ and RC-
Remote power ON	Open or keep 2~5Vdc
Remote power OFF	Short or keep<0.5Vdc

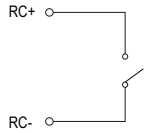	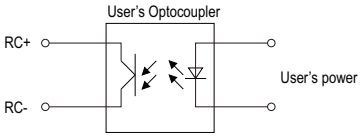	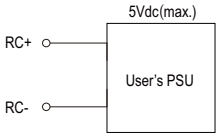	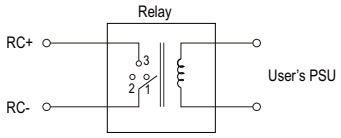
R.C. by external switch.	R.C. by user's optocoupler control module.	R.C. by user's external auxiliary power.	R.C. by user's Relay control module.

4.Protection Against Reverse Voltages from the Load

Prevent PSU damage from Back Electro magnetic Force during deceleration of motor or inductive load.

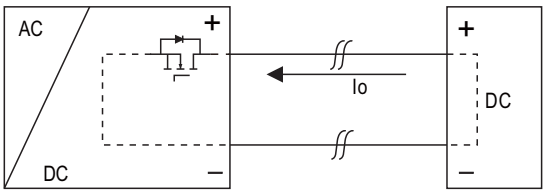

(XTR-960) (DC Load)

PSU'S ORing FET turn OFF voltage	
MODEL	Max. allowable reverse voltage
XTR-960-24	<35V
XTR-960-36	<50V
XTR-960-48	<63V

■ Mechanical Specification

(Unit:mm , Tolerance ±1mm)

Case No.304

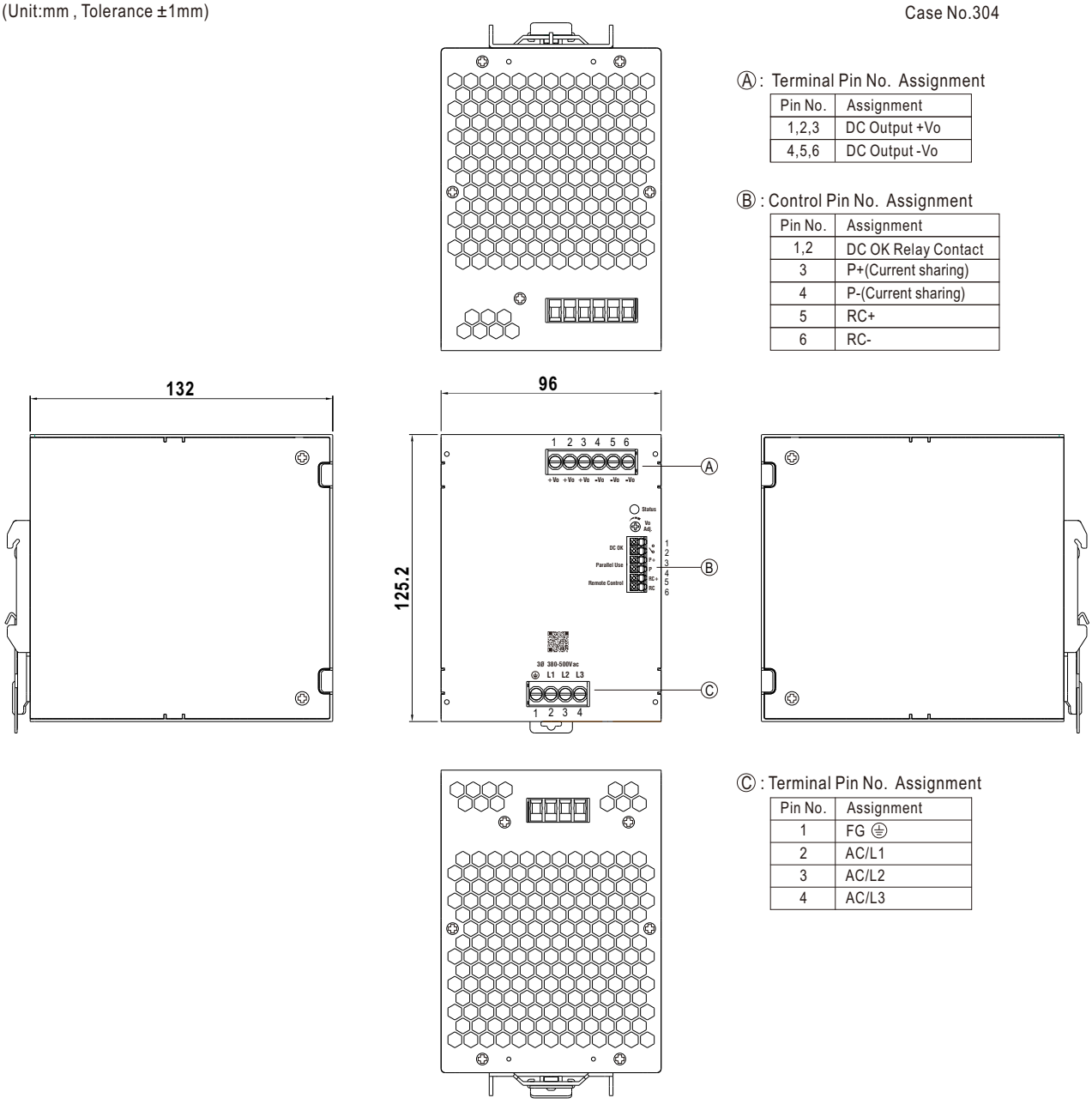

Ⓐ: Terminal Pin No. Assignment

Pin No.	Assignment
1,2,3	DC Output +Vo
4,5,6	DC Output -Vo

Ⓑ: Control Pin No. Assignment

Pin No.	Assignment
1,2	DC OK Relay Contact
3	P+(Current sharing)
4	P-(Current sharing)
5	RC+
6	RC-

Ⓒ: Terminal Pin No. Assignment

Pin No.	Assignment
1	FG ⏚
2	AC/L1
3	AC/L2
4	AC/L3

■ Recommend Wiring

		AC Input T.B	DC Output T.B	Signal connector
Solid Wire		6mm² max.	6mm² max.	1.5mm² max.
A.W.G		18~10 AWG	16~10 AWG	24~16 AWG
Wire Stripping Length	Blank	10~11mm	10~11mm	8~9mm
	LA	11~12mm	11~12mm	
	PI	14~15mm	14~15mm	
Screw Terminal Torque	Blank	5 Lb-In	5 Lb-In	/
	LA/PI	Not applicable		

■ Accessory List and Installation Diagram for GL Type

- The GL Type model is recommended for DNV certification or high vibration application.
- The GL Type model include the following accessories.

NO.	Item		Quantity
1	GL installation bracket	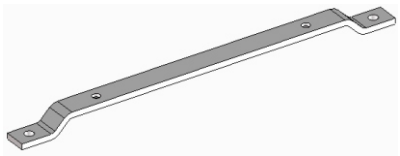	2
2	Screw(M3*8)		4
3	Screw(M4*8)		4

※ GL Type mechanical specification

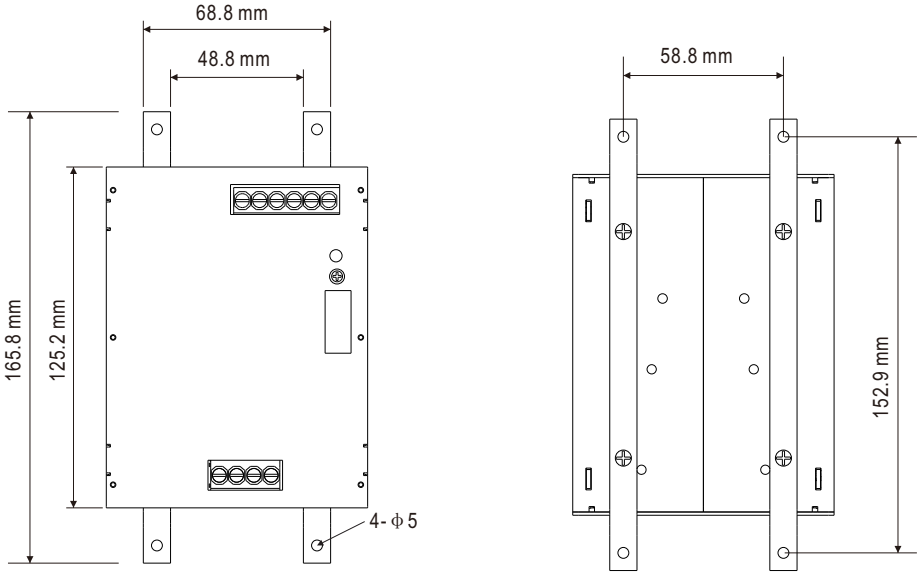

※ GL Type installation steps

Step1	Step2	Step3
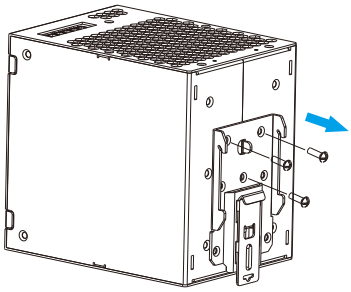	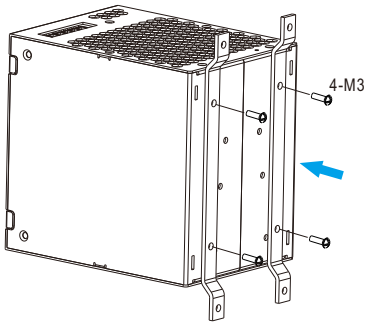	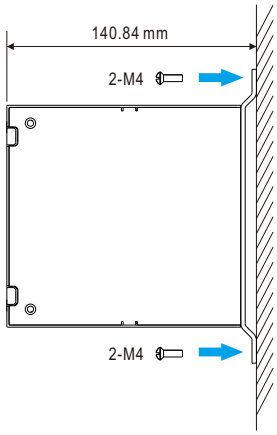
Detach the DIN Rail clip by removing screws.	Mount the steel brackets to the back of the case with M3*8 (L=8mm) screws. Recommended screw torque setting is 5 Lb-In.	Mount the XTR-960 power supply directly to the wall/panel through the mounting holes on the brackets.

■ DIN Rail Type Installation

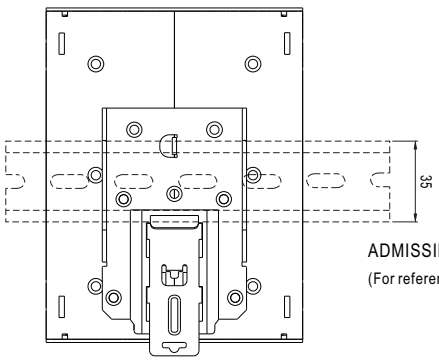

This series fits DIN rail TS35/7.5 or TS35/15.
For installation details, please refer to the Instruction manual.

ADMISSIBLE DIN-RAIL:TS35/7.5 OR TS35/15
(For reference only. Not included with unit.)

■ Installation Manual

Please refer to : http://www.meanwell.com/manual.html