BMD 60015

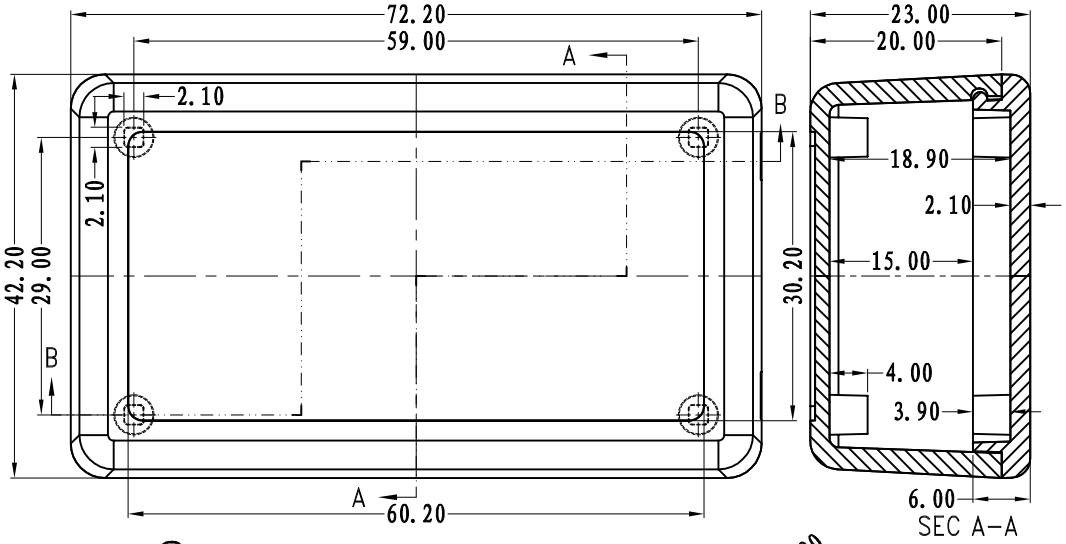

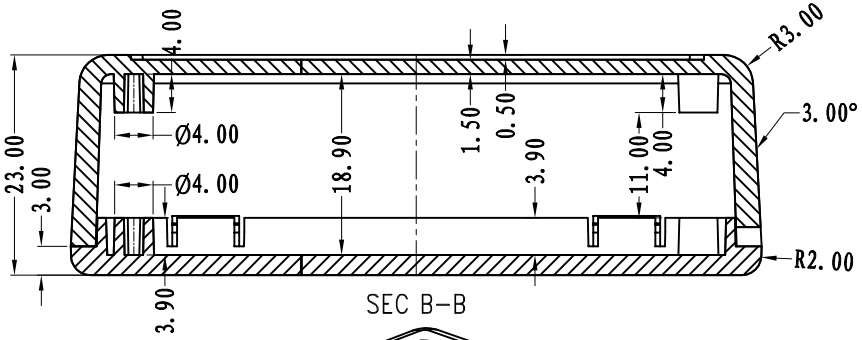

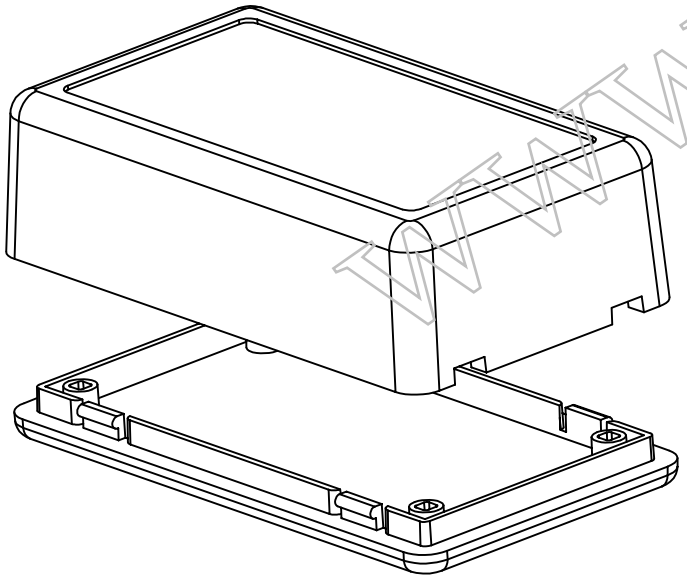

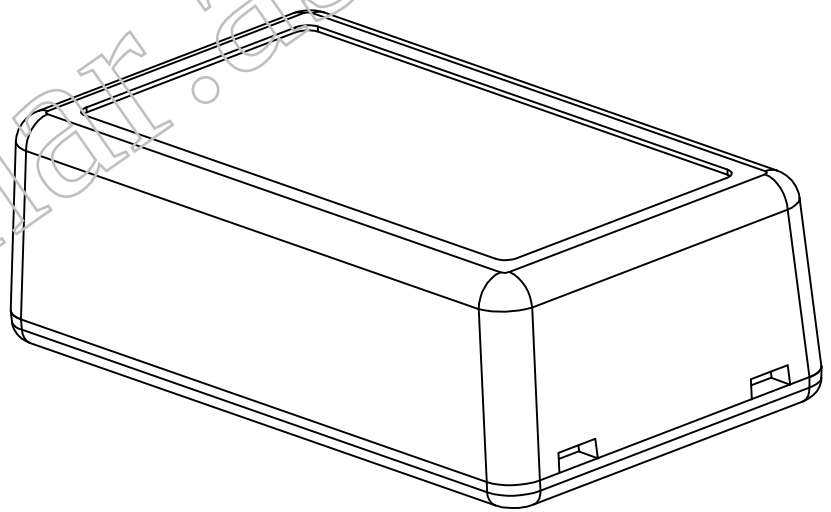

www.bahar.asia

BAHAR
WWW.BAHAR.ASIA

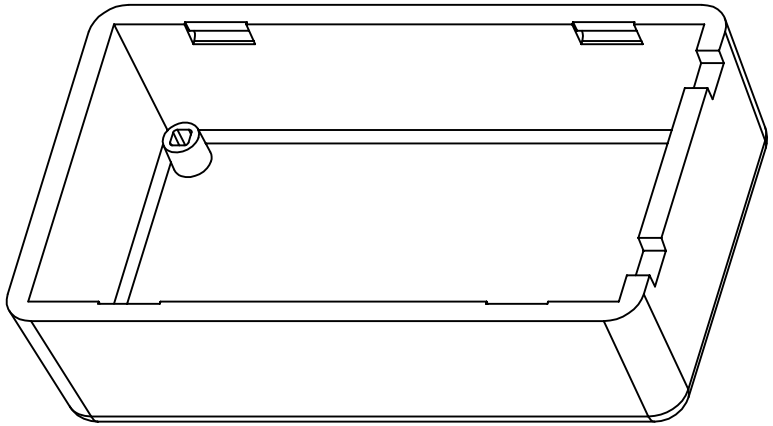

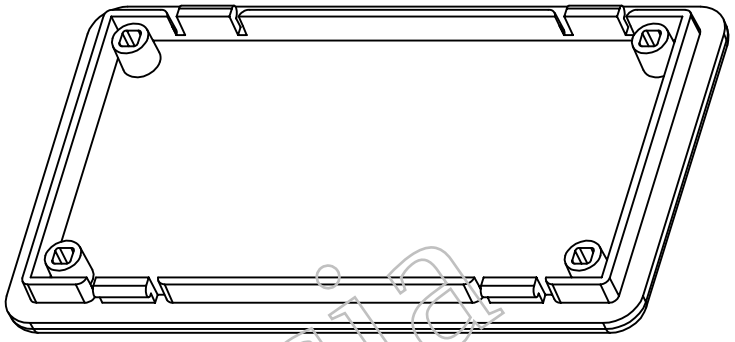

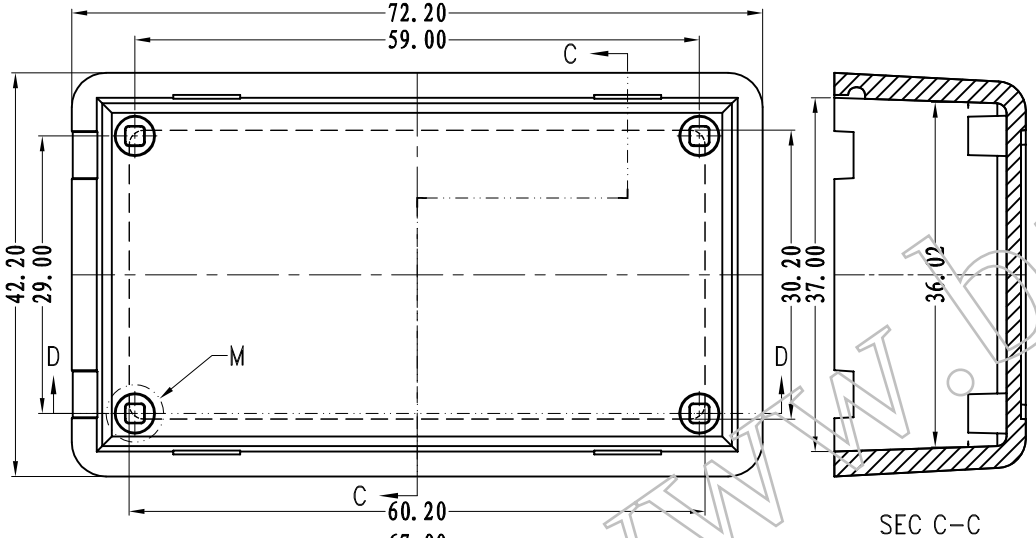

SEC C-C

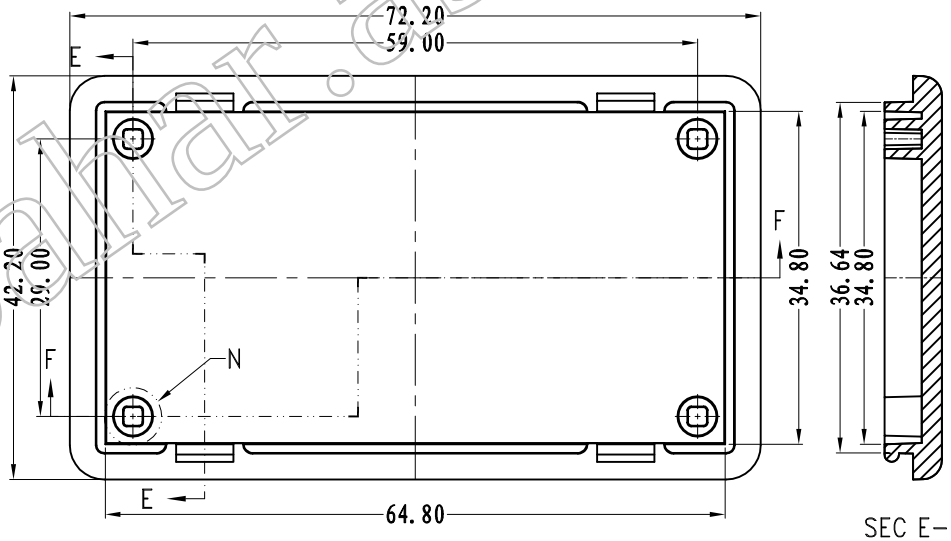

SEC E-E

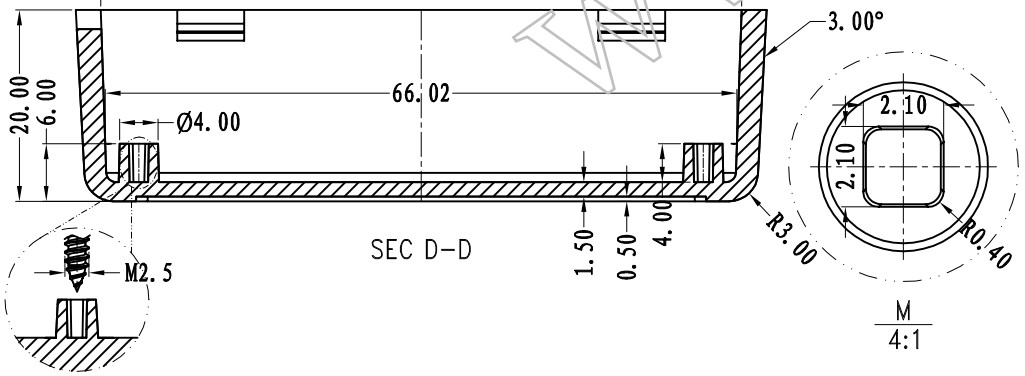

SEC D-D

M
4:1

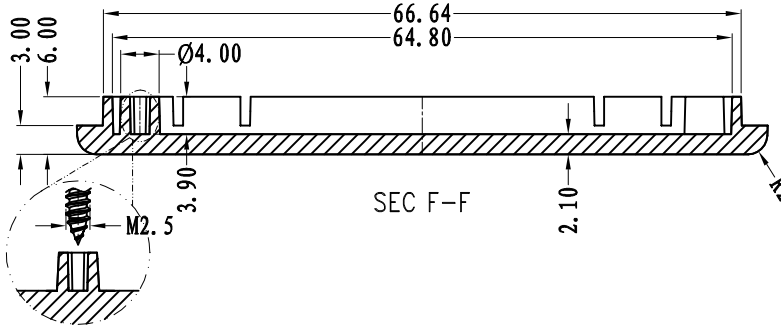

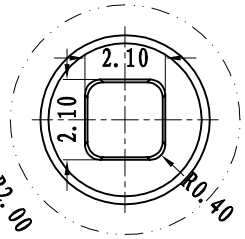

N
4:1

www.bmar.asia