TIANGXI COMPONENTS 田溪電子元器件

TX2400S1210-5V ELECTRO-MAGNETIC SOUNDER

1	Rated Voltage (V)	5
2	Operating Voltage (V)	3～7
3	Resonant Frequency (Hz)	2400
4	Coil Resistance (Ω)	42±4
5	*Sound Output at 10cm (dB)	≥85
6	*Current Consumption (mA)	≤60
7	Operating Temperature (℃)	-20～+70
8	Storage Temperature (℃)	-30～+80
9	Weight (g)	1.5
10	Case material and colour	PPO / Black

*Applying rated voltage (Resonant frequency, 1/2 duty, Square wave)

DIMENSIONS (UNIT: mm)

Tolerance: ±0.5mm Except Specified

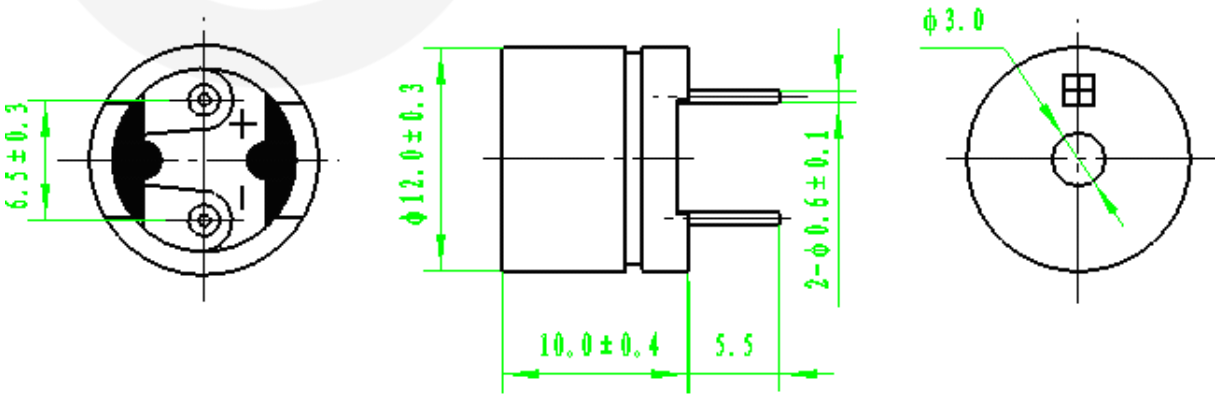

TEST METHOD:

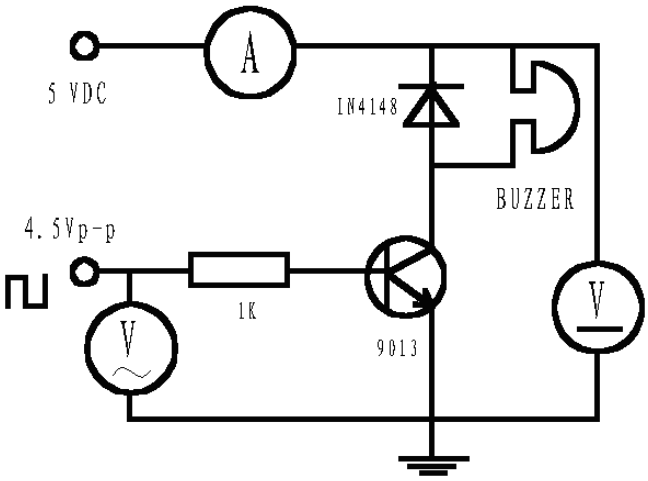

Test Circuit

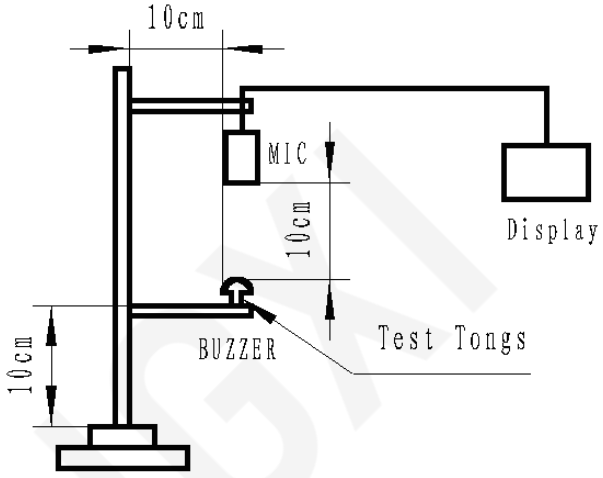

Test Equips

FREQUENCY RESPONSE:

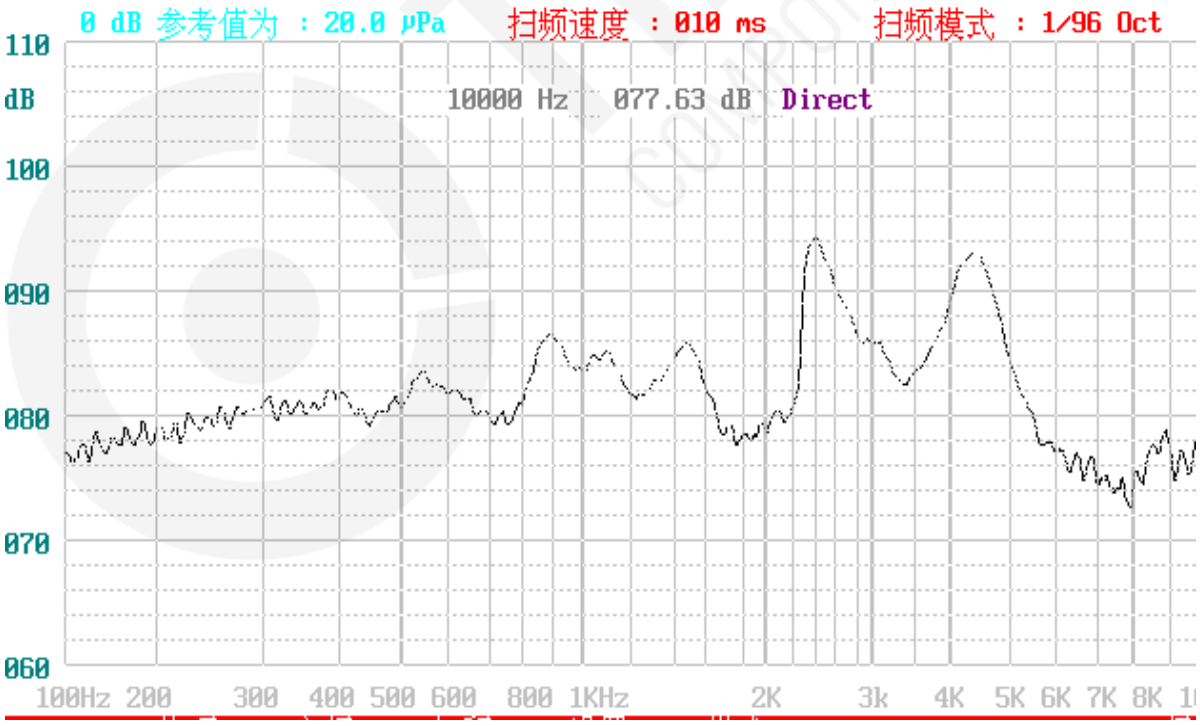

RELIABLY TEST:

NO.	ITEM	TESTING CONDITION	VARIANCE AFTER TEST
1	Humidity	50±5℃, 93(+2/-3)%RH, 96HRS	All specifications must be satisfied after the test.
2	High temp.	+80±2℃, 96HRS	
3	Low temp.	-30±2℃, 96HRS	
4	Temperature cycling	-30±2℃, 30minutes room temp. 15 minutes +80±2℃, 30 minutes room temp. 15 minutes 5 cycles	
5	Drop test	3 times from height of 70cm onto the surface of 10mm thick wooden board.	
6	Vibration test	Make the test for the directions of X Y and Z (total 0.5 hours). To-and-fro. sweep time (from 10 to 55 Hz and then 55 to 10) under single amplitude of 1.0mm is 1 minute.	
7	Solder heat resistance	The part leads (pins) shall be immersed in molten solder maintained at 250±10℃ for a period of 30 seconds.	After the test part shall meet specifications without any degradation in appearance and performance.

PACKING:

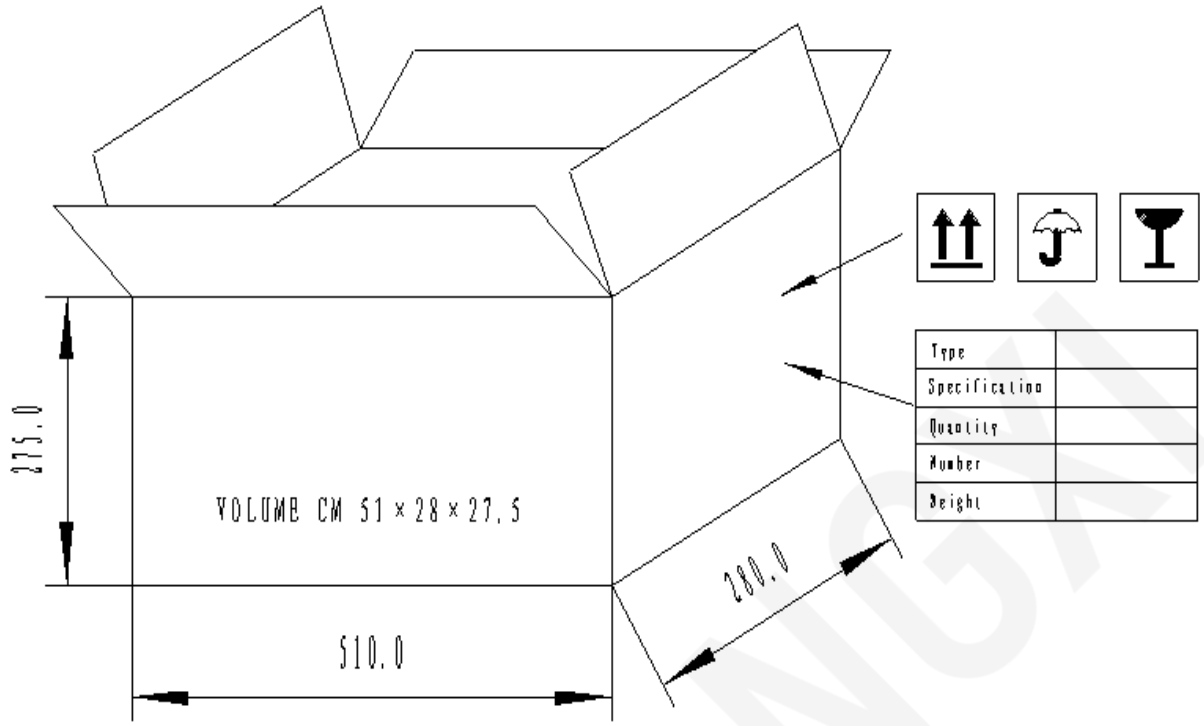

NOTES:

1. 100 PCS per bag
2. Total 30 bags per box
3. Total 3000 PCS box
4. Volume: 51×28×27.5cm