SPECIFICATION FOR APPROVAL

Goodex Switching Power Supply

客　户:

CUSTOMER:

产品描述:

DESCRIPTION: Input:100~240V AC 50/60Hz　Output:9VDC　0.6A

机种型号:

OUR MODEL NO: SPSW09-9V/600mA

文件编号:

FILE NO:

样品编号:　　日期:

SAMPLE NO:　　DATE: 2020.5.14

产品颜色:

SAMPLE COLOR:　Black ☑　White ☐

客户确/APPROVAL SIGNATURE		
核准/APPROVED BY	审核/CHECKED BY	检测/TESTED BY

制造商/Manufacturer		
业务/SALES	核准/APPROVED BY	设计/DESIGNED BY
	Ruan Xian Chen	LiJin

版本目录/Rev. List			
版本/Rev.	日期/Date	描述/Description	制订/Design
A0	2020-05-14	新版本/New Rev.	Shan

Table of contents

1、描述/DESCRIPTION.....3

2、输入特性/INPUT CHARACTERISTICS.....3

3、输出特性/OUTPUT CHARACTERISTICS.....4

4、保护功能/PROTECTION FUNCTION 5

5、环境要求/ENVIRONMENTAL REQUIREMET 5

6、安全及 EMI 要求/SAFETY AND EMC REQUIREMENT.....5

7、结构参数/MECHANICAL REQUIREMENT.....6

8、外形尺寸/OUTLINE DIMENSION.....7

9、铭牌标签/LABEL.....8

10、包装说明/PACKING.....9-11

1、描述/SCOPE:

本规格书适应 SPSW09-9V/600mA 型号的开关电源。

The purpose of the document is to specify the functional requirements of a5.4W switching power supply.

2、输入特性/INPUT CHARACTERISTICS:

2.1 输入电压/Input Voltage:

额定电压/Rated Voltage:100～240Vac

调整范围/Variation Range:90-264Vac

2.2 输入频率/Input Frequency:

额定频率/ Rated Frequency: 50/60Hz.

调整频率/Variation Frequency:47-63Hz

2.3 输入电流/Input Current:

当输入交流电压为额定值的下限电压负载满载时,最大输入交流电流 0.2A.

0.2Amps max At any input voltage and rated, DC output rated load.

2.4 AC 漏电流/Ac Leakage Current:

当输入电压 264Vac 时,最大漏电流为 0.25mA

0.25mA Max.At264Vac input

3、输出特性/OUTPUT CHARACTERISTICS:

3.1 输出功率/Power output

电压 Voltage	最小负载 Min. Load	额定负载 Rated. Load	峰值功率 Peak Load	输出功率 Output power
9Vdc	0.00A	0.6A		5.4W

3.2 负载特性,调整率/Combined Load/Line Regulation

电压 Voltage	最小负载 Min. Load	额定负载 Rated. Load	线性调整 Line Regulation	负载调整 Load Regulation
9Vdc	0.00A	0.6A	±3%	±5%

3.3 纹波和噪音 Ripple and Noise:

Output Ripple voltage is 150mV peak to peak or less.(100Vac 60Hz/240Vac 50Hz)

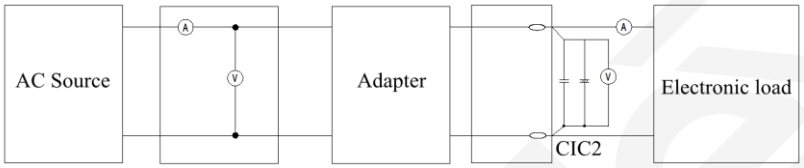

Measured methods:

*The ripple is measured from peak to peak with band width limit of 20MHz(C1:0.1uF Ceramics capacitor C2:47uF/50V Aluminum capacitor under DC output full load,AC nominal input 25℃ ambient temperature).

3.4 启动延迟时间/Turn on delay time:

当输入 100Vac 和输出最大负载时,最大启动时间为 3S.

3Second Max.at 100Vac input and output Max.load.

3.5 上升时间/Rise time:

当输入 100Vac 和输出最大负载时最大时间为 40 mS.

40 mS Max.at 100Vac input and output Max load.

3.6 保持时间/Hold up time:

当输入 100Vac 和输出最大负载时,最小保持时间为 5 mS.

5 mS Min.at 100Vac input and output Max.Load.

3.7 效率/Efficiency:

当输入 115Vac 和输出最大负载时,最小 70%.

70%Min. at 115Vac input and output Max.Load.

当输入 230Vac 和输出最大负载时,最小 70%

70%Min. at 230Vac input and output Max.Load.

3.8 待机功耗Standby Power:

额定电压 Rated Voltage:100~240Vac 0.3W max

4、保护功能/PROTECTION FUNCTION:

4.1 短路电路保护/Short circuit protection:

该电源供给器在短路解除时能正常工作恢复.

The power supply will be auto recovered when short circuit faults remove.

4.2 过流保护/Over current Protection:

过流故障排除后,电源将恢复正常工作.

The power supply will be auto recovered when over current faults remove.

4.3 过压保护/Output voltage achieve over voltage protection point.will auto protection without output.be capable of auto-recovery function

5、环境要求/ENVIRONMENTAL REQUIREMET:

5.1 工作温度/Operating Temperature:

0℃-40℃,满载,正常工作.

0℃ to 40℃,Full load, Normal operation.

5.2 储藏温度/Storage Temperature:-10℃ to 80℃

带外壳/With package

5.3 工作湿度/Relative Humidity:

25%(0℃)~75%(40℃),72 小时,满载,正常工作.

25%(0℃)~75%(40℃)RH,72Hrs,Full load, Normal operating.

6、安全及 EMI 要求/SAFETY AND EMI REQUIREMENT:

6.1 安全:符合标准 EN60950-1.

Safety:Comply with EN60950-1.

6.2 绝缘阻抗：输入 500VDC 初级到次级最小阻抗 100MΩ

Insulation Resistance: 500VDC primary to the secondary input impedance of 100MΩ(Min)

6.3 高压/DIELECTRIC WITHSTAND Hi-Pot:

HI-POT-- primary to secondary3000Vac 5mA 1min

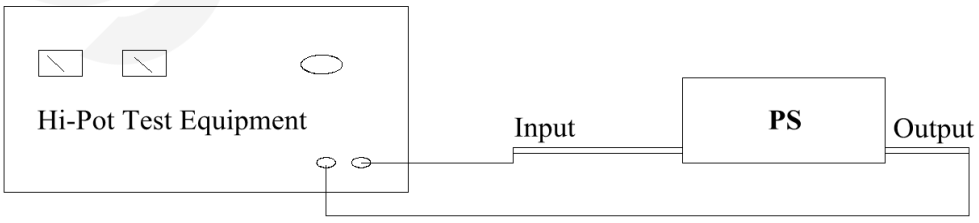

6. 4 EMI 标准/EMI STANDARD

测试符合/Meets the Limits of

<1>. EN55032 class B rules

7、结构参数/MECHANICAL REQUIREMENT:

7.1 外壳/Enclosure:

外壳尺寸: L60 x W39 x H25mm;

The power supply size: L60 x W39 x H25mm;

6、外形尺寸/OUTLINE DIMENSION:

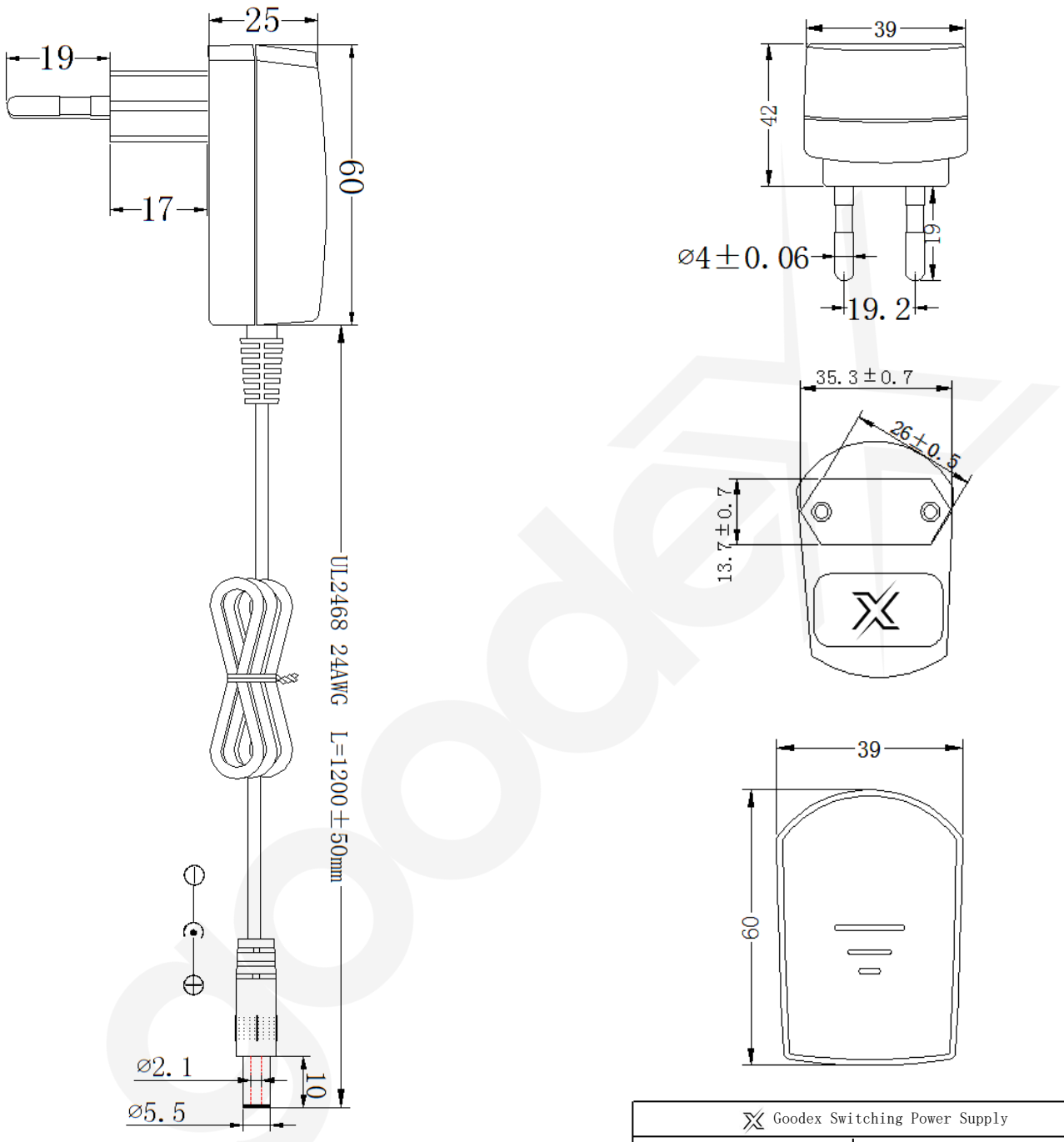

Goodex Switching Power Supply	
单位/UNIT:	毫米/mm
型号/MODEL:	SPSW09
日期/DATE	2020.5.14
设计/Design	LiJin
审核/Examine	Ruan Xian Chen

文件名称/Document Title: 交流/直流开关电源/AC/DC Switch power supply	goodeX	日期 /Date:2020.5.14
公司机密/Company Confidential ■ 是/Yes □ 否/NO		页码/ Page code 7/11

7. 铭牌标签/LABEL:

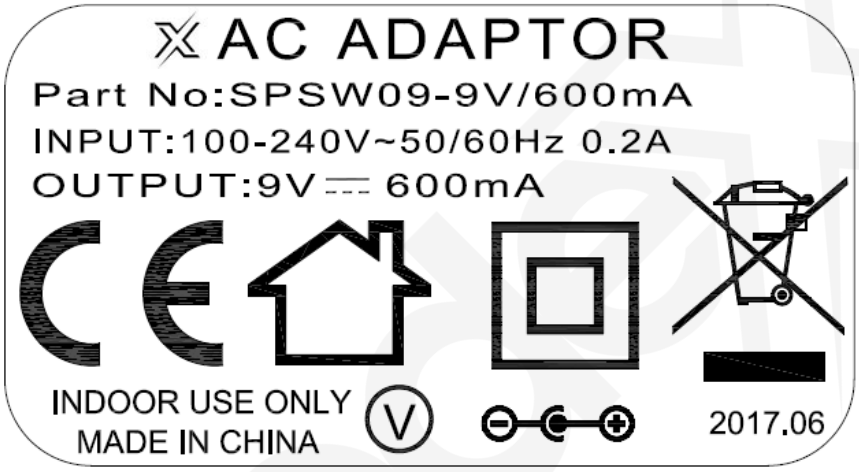

Goodex Switching Power Supply	
单位/UNIT:	毫米/mm
型号/MODEL:	SPSW09
日期/DATE	2020.5.14
设计/Design	LiJin
审核/Examine	Ruan Xian Chen

8、包装说明/PACKING STEP:

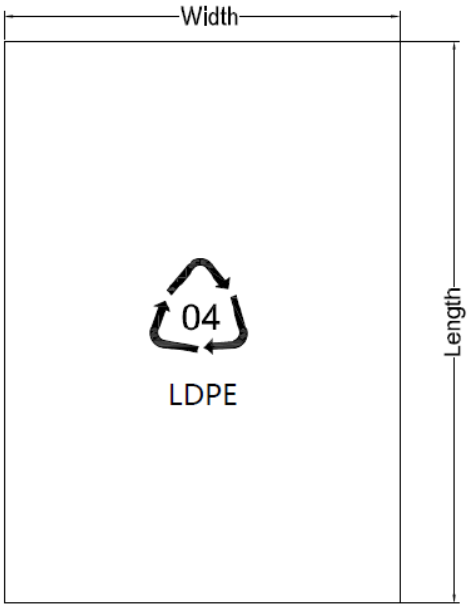

1 PE 袋/ PE bag:

长/ Length:170mm

宽/ Width:120mm

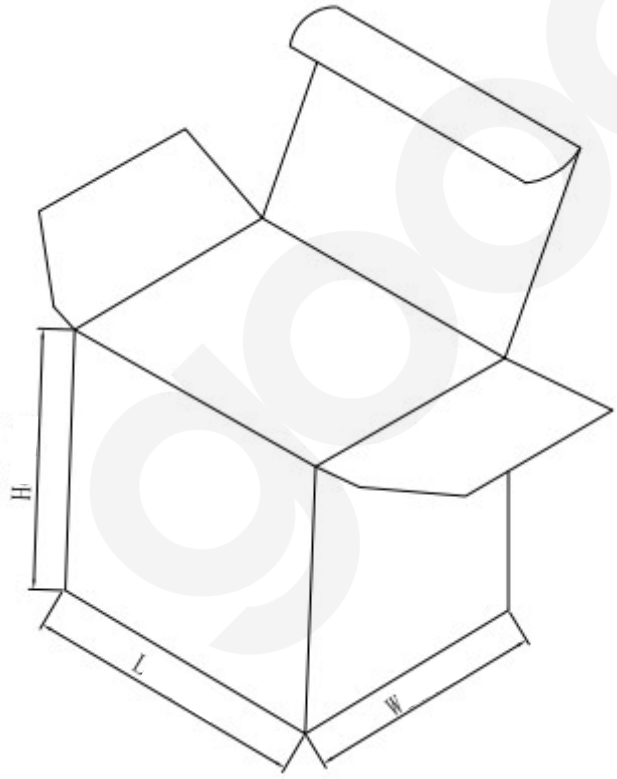

2 内盒/ Inner box:

长/ Length:75mm

宽/ Width:48mm

高/ Height:68mm

Goodex Switching Power Supply	
单位/UNIT:	毫米/mm
型号/MODEL:	SPSW09
日期/DATE	2020.5.14
设计/Design	LiJin
审核/Examine	Ruan Xian Chen

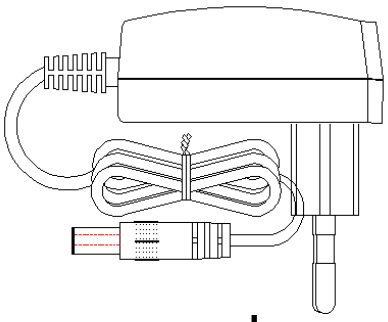

A :Product

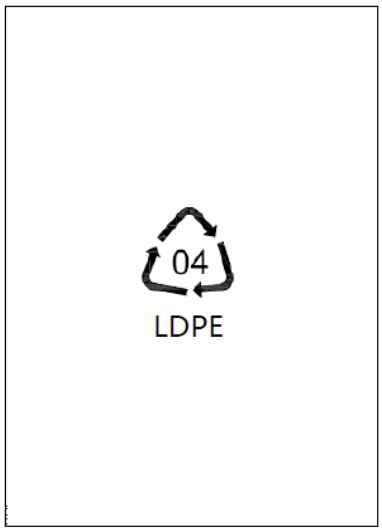

B:PE Bag

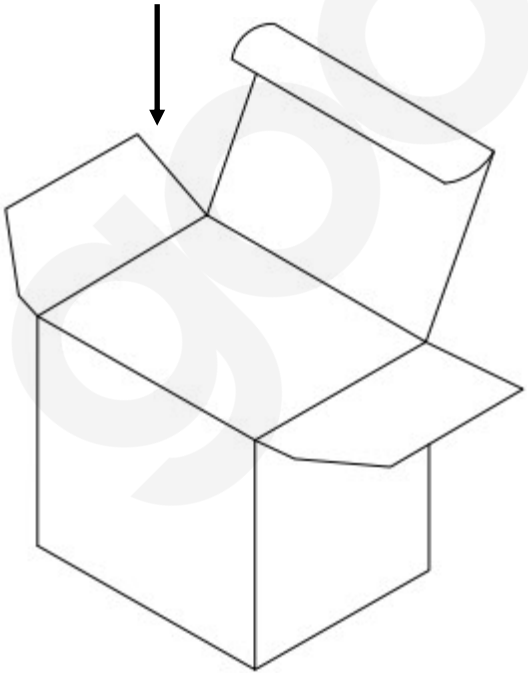

C: Inner box

Goodex Switching Power Supply	
单位/UNIT:	毫米/mm
型号/MODEL:	SPSW09
日期/DATE	2020.5.14
设计/Design	LiJin
审核/Examine	Ruan Xian Chen

文件名称/Document Title: 交流/直流开关电源/AC/DC Switch power supply	goodex	日期 /Date:2020.5.14
公司机密/Company Confidential ■ 是/Yes □ 否/NO		页码/ Page code 10/11

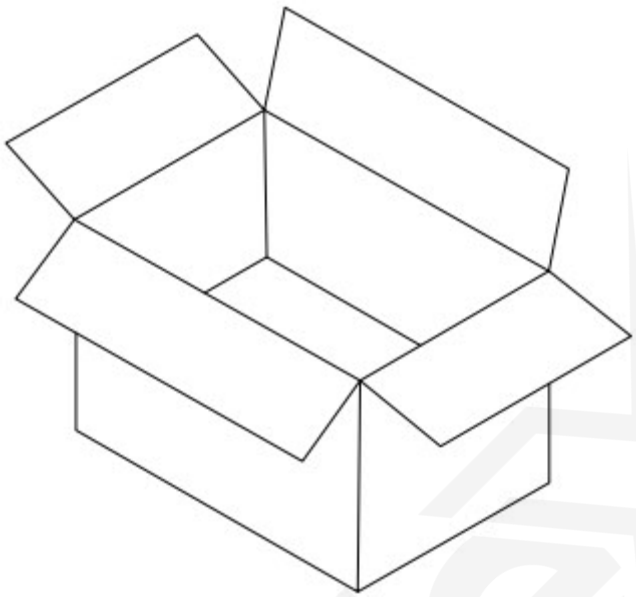

Packing request:
Packaging
Outside box:405L*260W*300H
Quantlty:100PCS/CTN

Remarks:

1. Firstly, put the product into PE bag according to the picture “A/B”.
2. After finishing the first step, then put the product into white box according to the picture “C”.
3. Then put the product into outer carton.
4. When packing finished, then seals the carton and labels the mark.
5. Through the QA inspection, the products can be shipped

Goodex Switching Power Supply	
单位/UNIT:	毫米/mm
型号/MODEL:	SPSW09
日期/DATE	2020.5.14
设计/Design	LiJin
审核/Examine	Ruan Xian Chen

文件名称/Document Title: 交流/直流开关电源/AC/DC Switch power supply	goodex	日期 /Date:2020.5.14
公司机密/Company Confidential ■ 是/Yes □ 否/NO		页码/ Page code 11/11