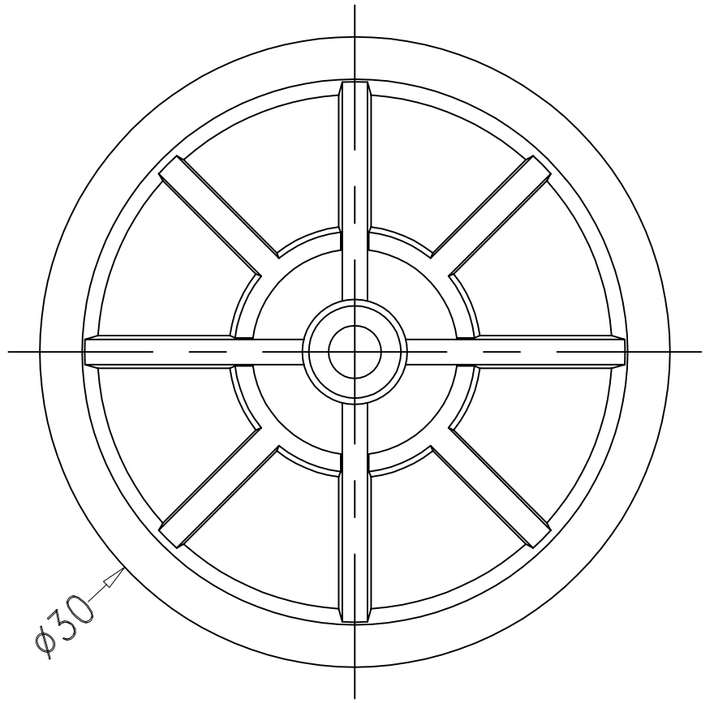

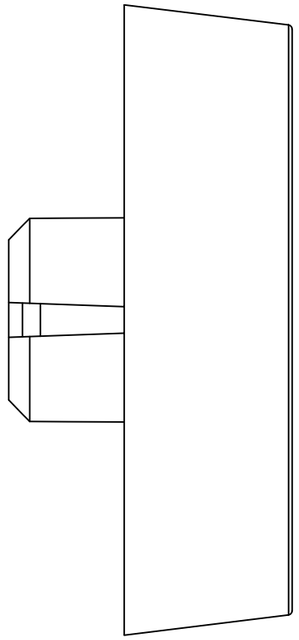

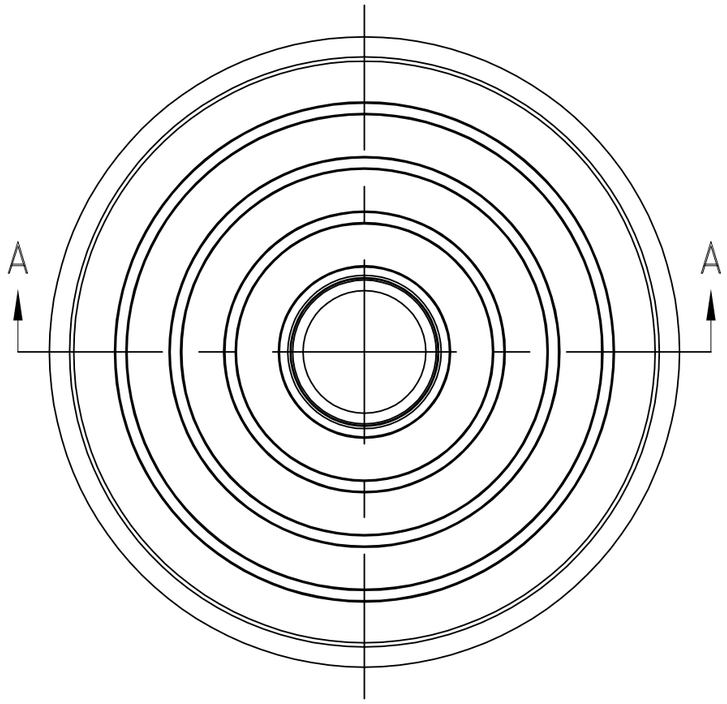

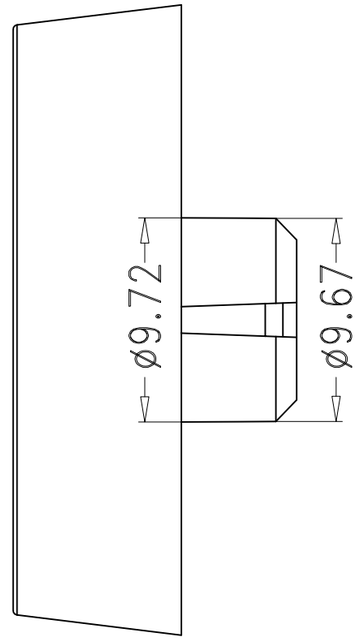

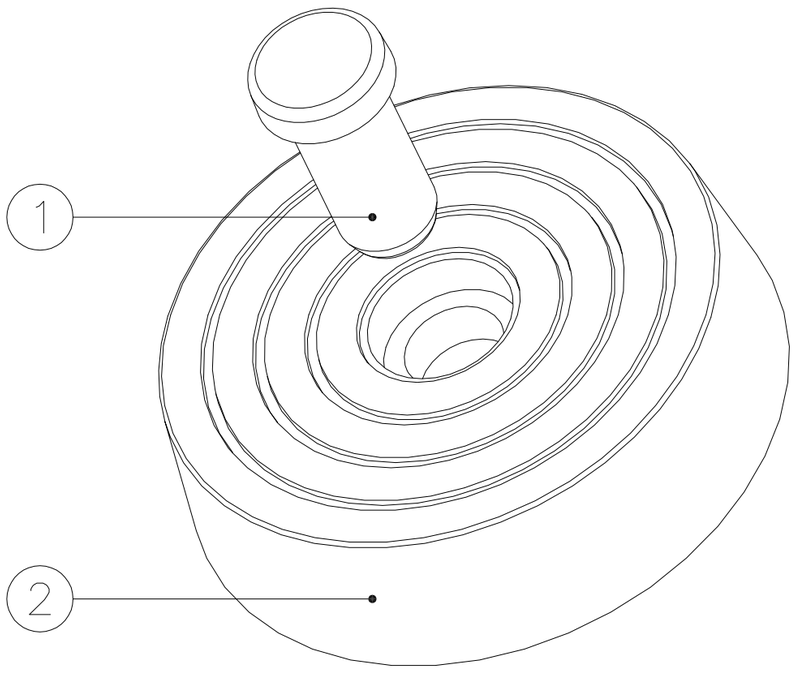

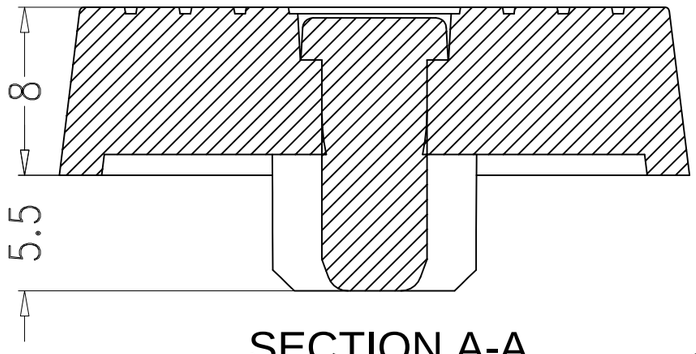

SECTION A-A

Can expand

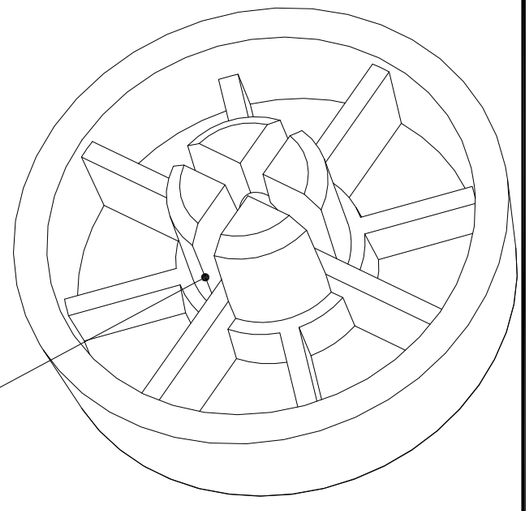

2	foot pad	TPE	1	/		
1	Bolt	ABS	1	/		
Drawing	Auditing	Confirm	Product Name	Other Goods	Project View	A
			Product Type	BP-30	Drawing Scale	1:1 (MM)

www.bahar-enclosure.com **BAHAR ENCLOSURE GmbH**