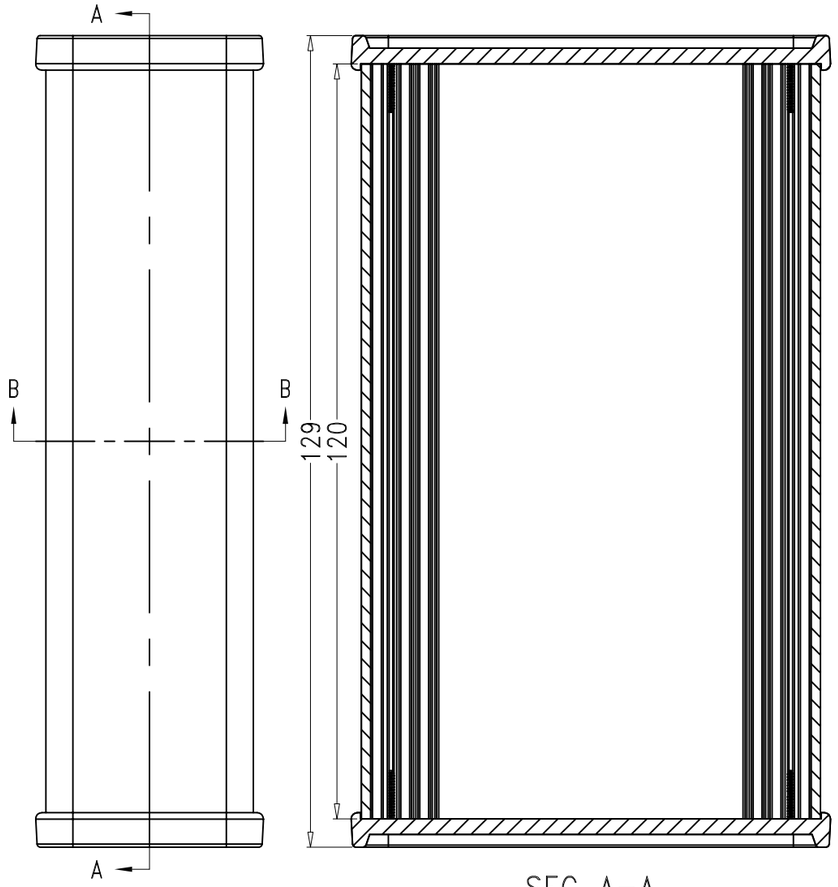

SEC A-A

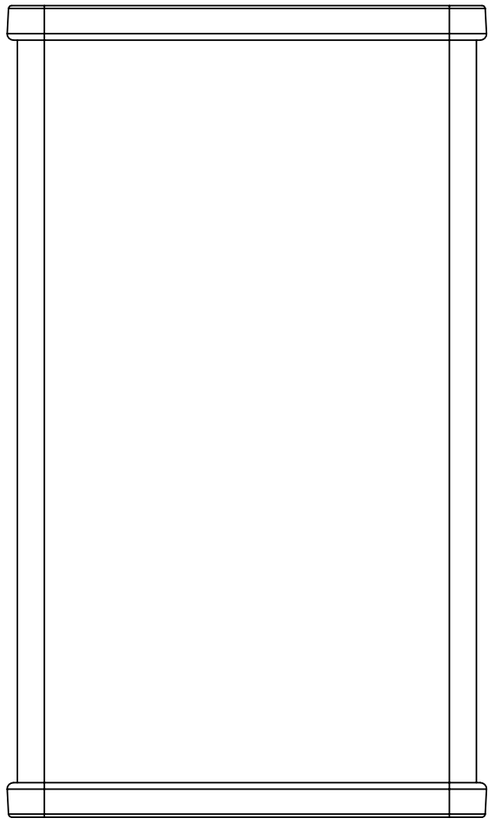

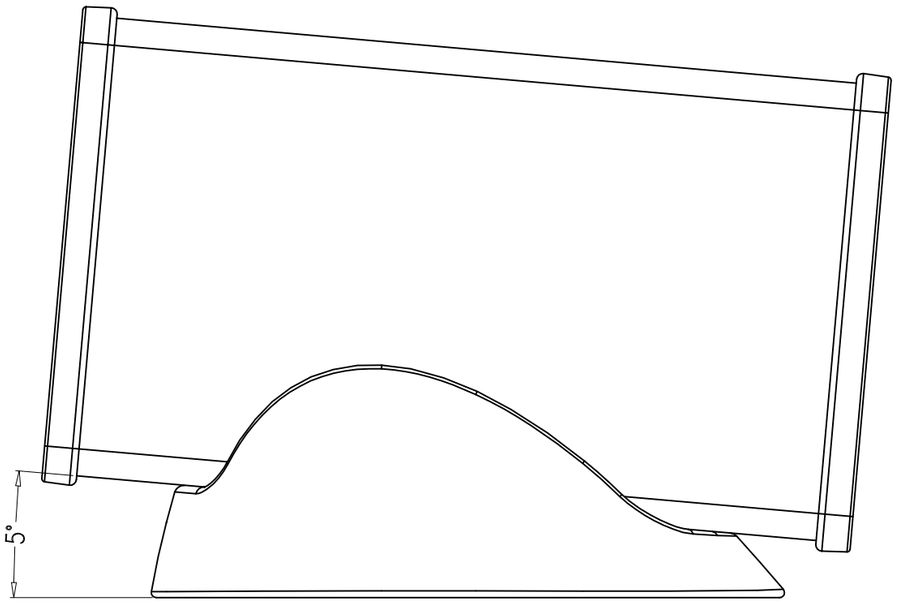

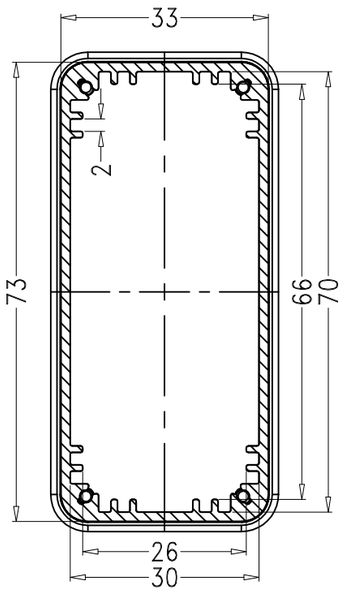

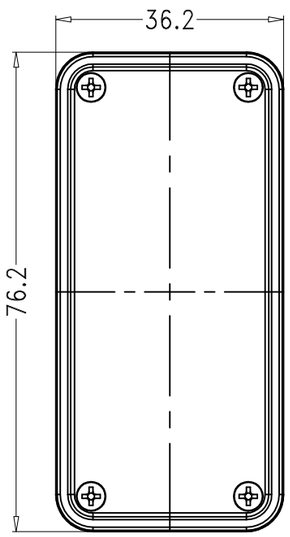

SEC B-B

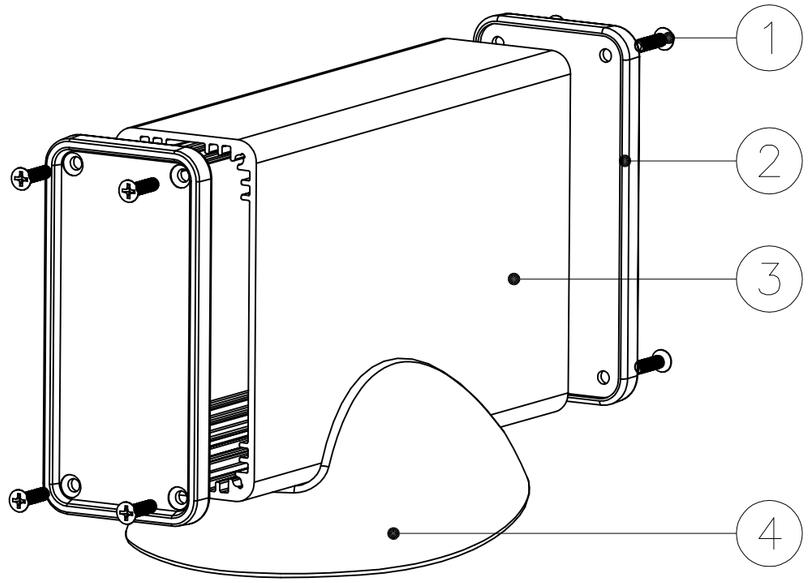

4	base	PP	1	11003-C1			
3	Al profile	AL	1	11003-A1			
2	panel	ABS	2	11003-B1			
1	screws	STD	8	KM2.5X10			
Drawing	Auditing	Confirm	Product Name	Aluminum case	Project View		A
			Product Type	BAD 11003-B W120	Drawing Scale	1:1 (MM)	

www.bahar-enclosure.com

BAHAR ENCLOSURE GmbH