TIANGXI
COMPONENTS

PRODUCT SPECIFICATION

Model Number: SMA-PCB-V-90-GOLD

Product Name: SMA-J Coaxial Connector

I. Appearance



II. Main Features

No.	Item	Specification
1	Connector Style	SMA-J
2	Connector Type	Plug, Male pin
3	Contact Termination	Solder
4	Impedance (Ω)	50
5	Frequency (Max)	6GHz
6	Mounting Type	Through Hole
7	Fastening Type	Threaded
8	Body	Brass, gold plated

III. Enginnering Drawing

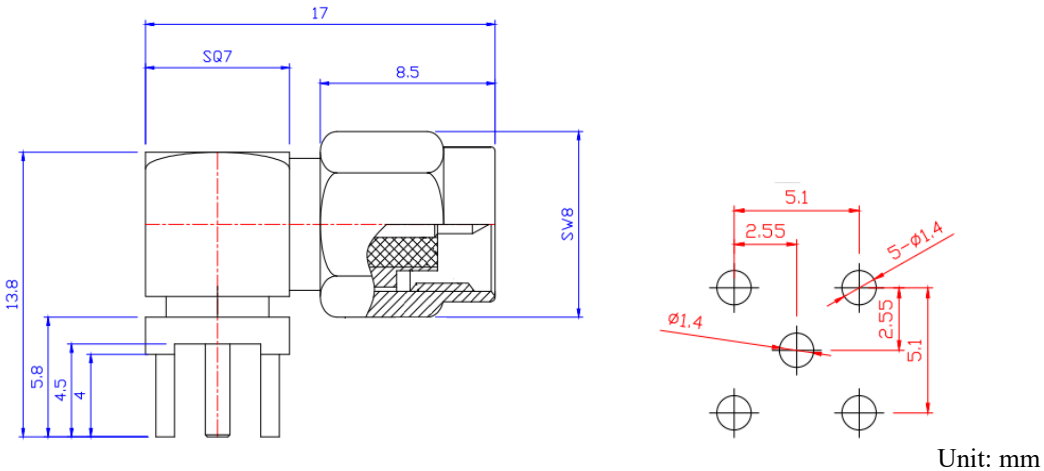

Unit: mm